en

Schneider Electric

SpaceLogic KNX Logic module Basic REG-K

Operating instructions

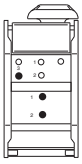

Art. no. MTN676090

For your safety

⚠⚠ DANGER

HAZARD OF ELECTRIC SHOCK, EXPLOSION, OR ARC FLASH

Safe electrical installation must be carried out only by skilled professionals. Skilled professionals must prove profound knowledge in the following areas:

- Connecting to installation networks
- Connecting several electrical devices
- Laying electric cables
- Connecting and establishing KNX networks
- Safety standards, local wiring rules and regulations

Failure to follow these instructions will result in death or serious injury.

Getting to know the module

The KNX logic module Basic REG-K(called **module** in the following) facilitates control and regulation tasks. The received bus telegrams are interpreted and processed according to the programmable logic functions.

It is programmed via ETS.

For installation on EN 60715 DIN rails.

Connections, displays and operating elements

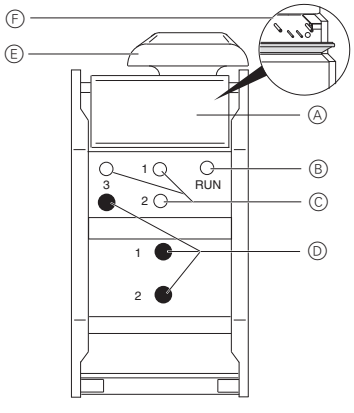

Ⓐ Flap, open forward
Ⓑ Operational LED (green): RUN
Ⓒ Channel LED (yellow) 1-3 for Ⓓ
Ⓓ Function keys 1-3
Ⓔ Cable cover
Ⓕ Behind the flap: Bus connecting terminal, programming button and programming LED (red)

ℹ The 3 function keys have no function when they come from the factory. The keys and their functions first have to be enabled in ETS.

Mounting the module

⚠ **WARNING**

Risk of fatal injury from electrical current. The device can be damaged.
Ensure the safety distance per IEC 60664-1. There must be at least 4 mm between the individual cores of the 230 V supply cable and the KNX cable.

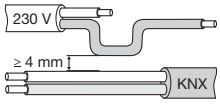

① Insert the module into the DIN rail with the clamping spring facing down and suspend it in the rail.

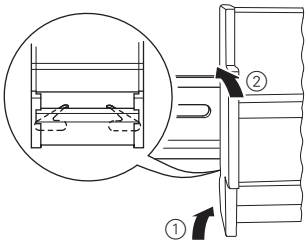

② Connect KNX.

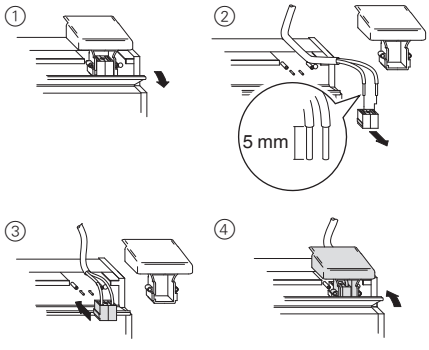

③ Switch on the bus voltage.
④ Wait for at least 30 s.

Commissioning the module

① Press the programming button: the programming LED lights up.
② Load the physical address and application into the device from the ETS.

The programming LED goes out.

The operating LED lights up: the application has been loaded successfully and the device is operative.

Operating the module

① Enable the ETS push-button operation.
② Program each key with a logic function (links, disable and time functions)
③ Load the application into the device.
④ Press the key that you have programmed: the associated channel LED lights up when it is pressed.

ℹ The channel keys on the device are only there to retrieve logic functions without ETS.

Status LED

Operational LED (green)	**Programming LED** (red)	**Channel LED** (yellow)	
-	ON	-	The application is being loaded
On	-	-	Normal operation
On	-	On	Channel with function enabled in ETS

Operational LED (green)	**Programming LED** (red)	**Channel LED** (yellow)	
On	-	-	Normal operation
Off	-	-	No bus voltage
On	-	Lights up when activated	Channel with function enabled in ETS

Technical data

Power supply:	Via KNX DC 24 V, max. 16 mA
Operating elements:	1 programming key 1 manual operation key 1 channel key per channel
Display elements:	1 LED (red): Programming 1 LED (green): RUN 1 LED (red): Manual operation 1 LED (yellow) per channel: Status
Ambient temperature:	
Operation:	-5 °C to +45 °C
Environment:	Can be used at elevations up to 2000 m above sea level (MSL)
KNX connection:	Two 1 mm pins for bus connecting terminal
Device width:	45 x 102 x 65 mm (W x H x D)

Schneider Electric -Contact

Schneider Electric Industries SAS
35 rue Joseph Monier
Rueil Malmaison 92500
France

If you have technical questions, please contact the Customer Care Centre in your country.

se.com/contact

UK CA

UK Representative
Schneider Electric Limited
Stafford Park 5
Telford, TF3 3 BL, UK

V6760-563-01 01/22