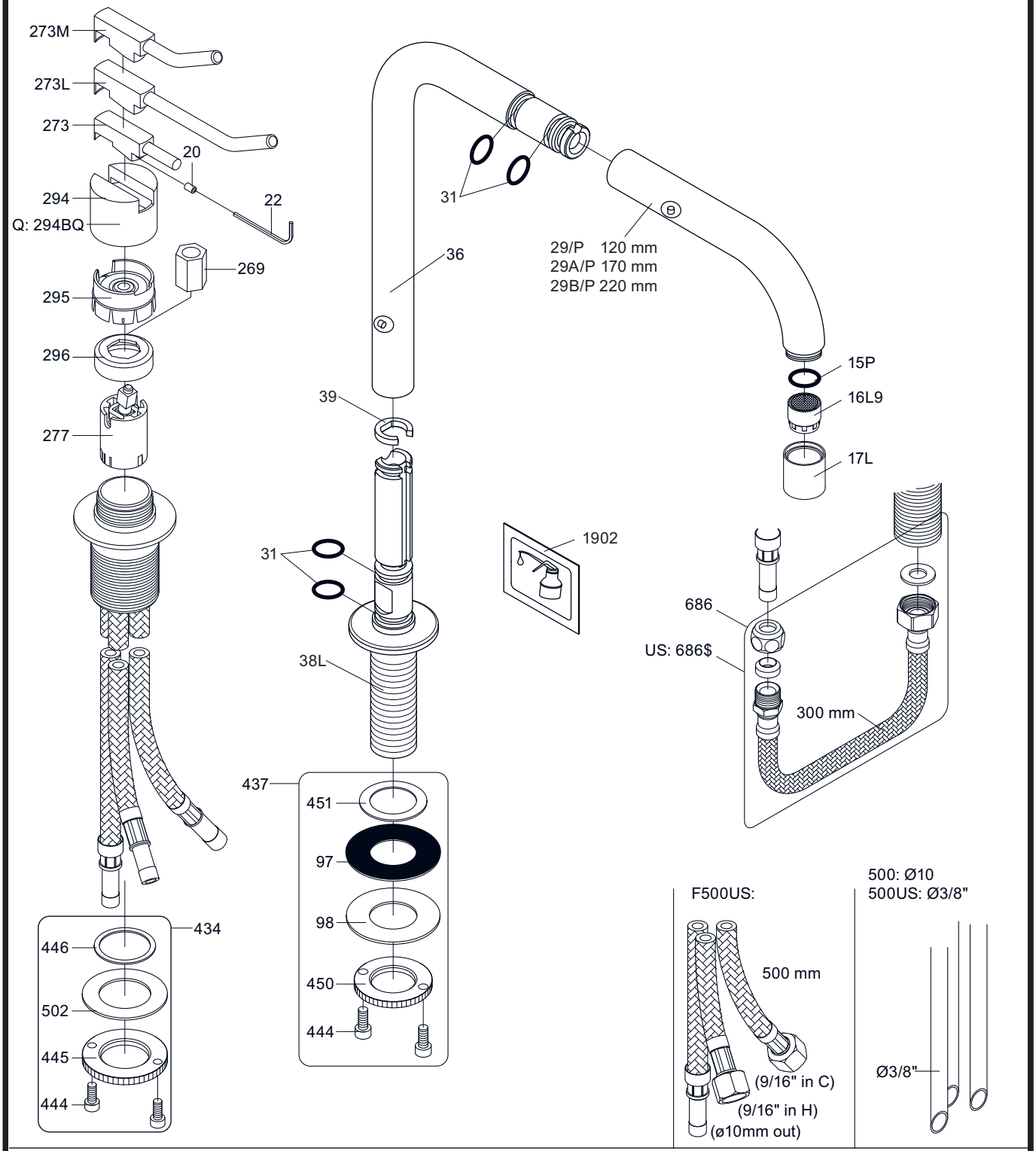

VR277K: VR22, VR269, VR277
VR297: VR20, VR22, VR269, VR273, VR277, VR294, VR295, VR296
VR434: VR261, VR263, VR440, VR442, 2xVR444
VR437: VR97, VR98, 2xVR444, VR450, VR451
NR.10: VR20, VR22, VR273, VR294, VR295
VR090: VR15P, VR17L, VR16L9

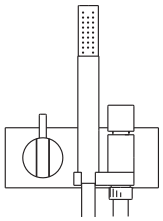

VOLA A/S
Lunavej 2
DK-8700 Horsens
Tlf : + 45 7023 5500
Fax: + 45 7023 5511
sales@vola.com
www.vola.com

VOLA 590

Dato
Apr. 12

Rev.
4

Blad
SB27.72