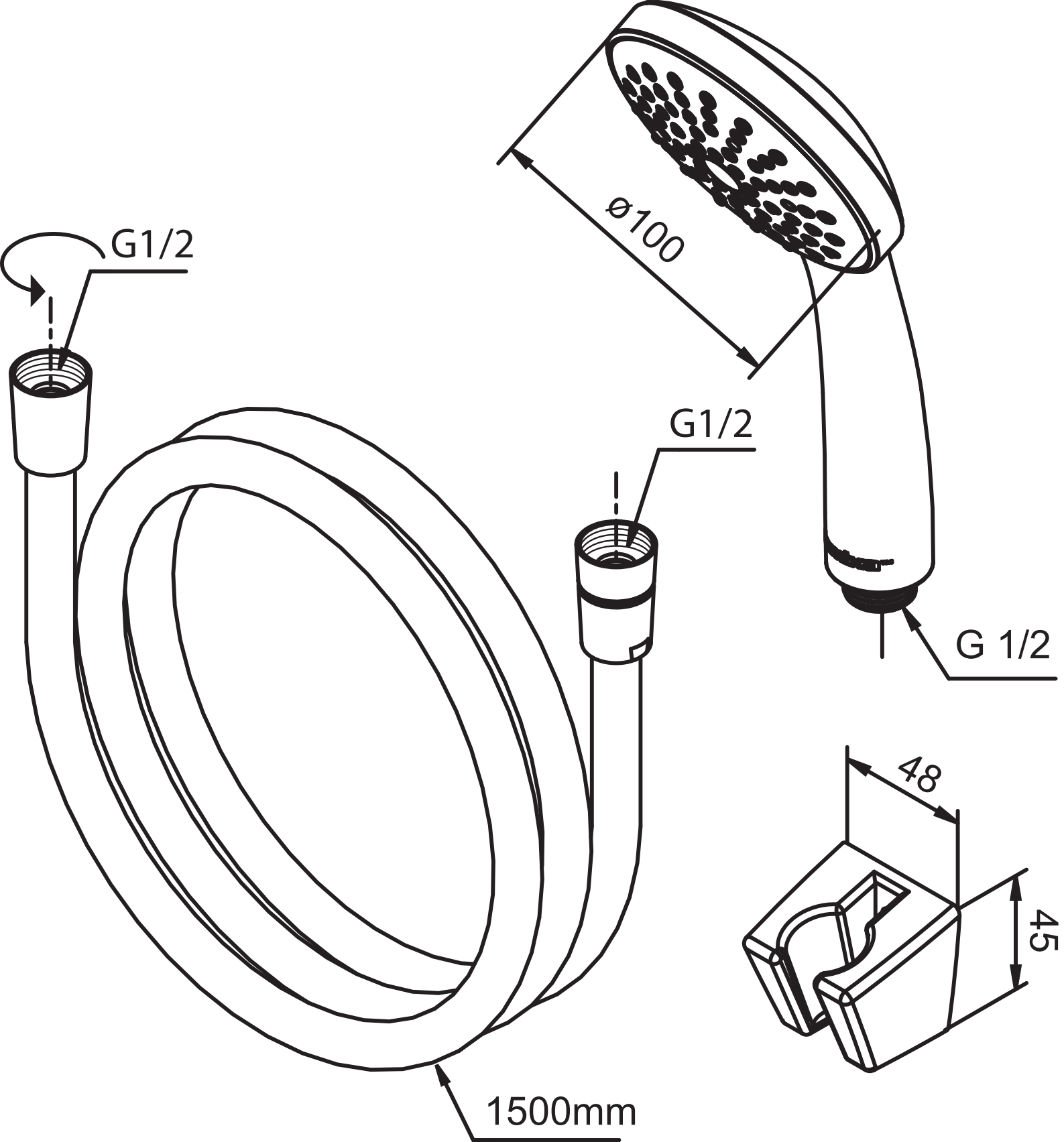
G1/2
Ø100
G1/2
G 1/2
48
45
1500mm