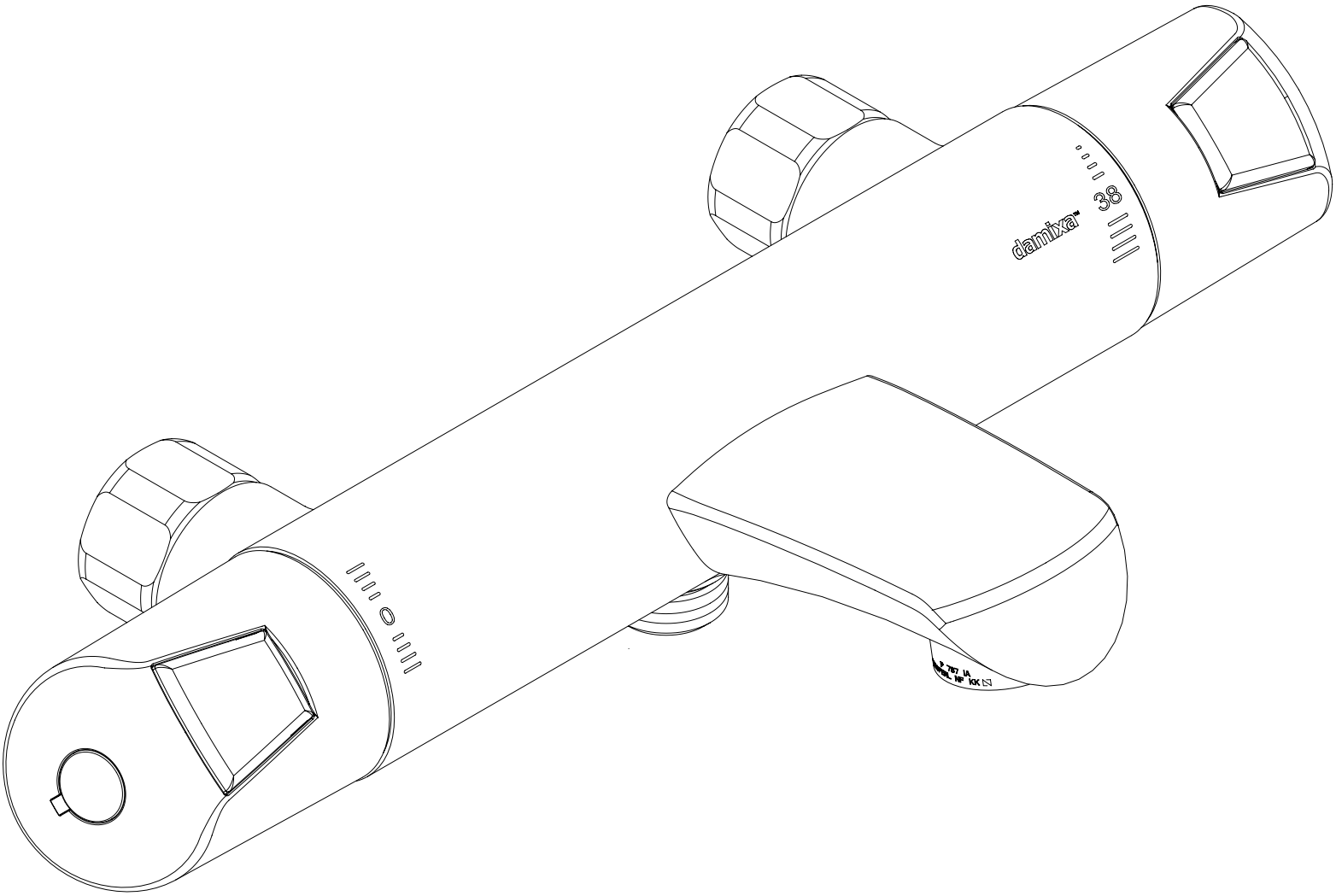
damixa
38