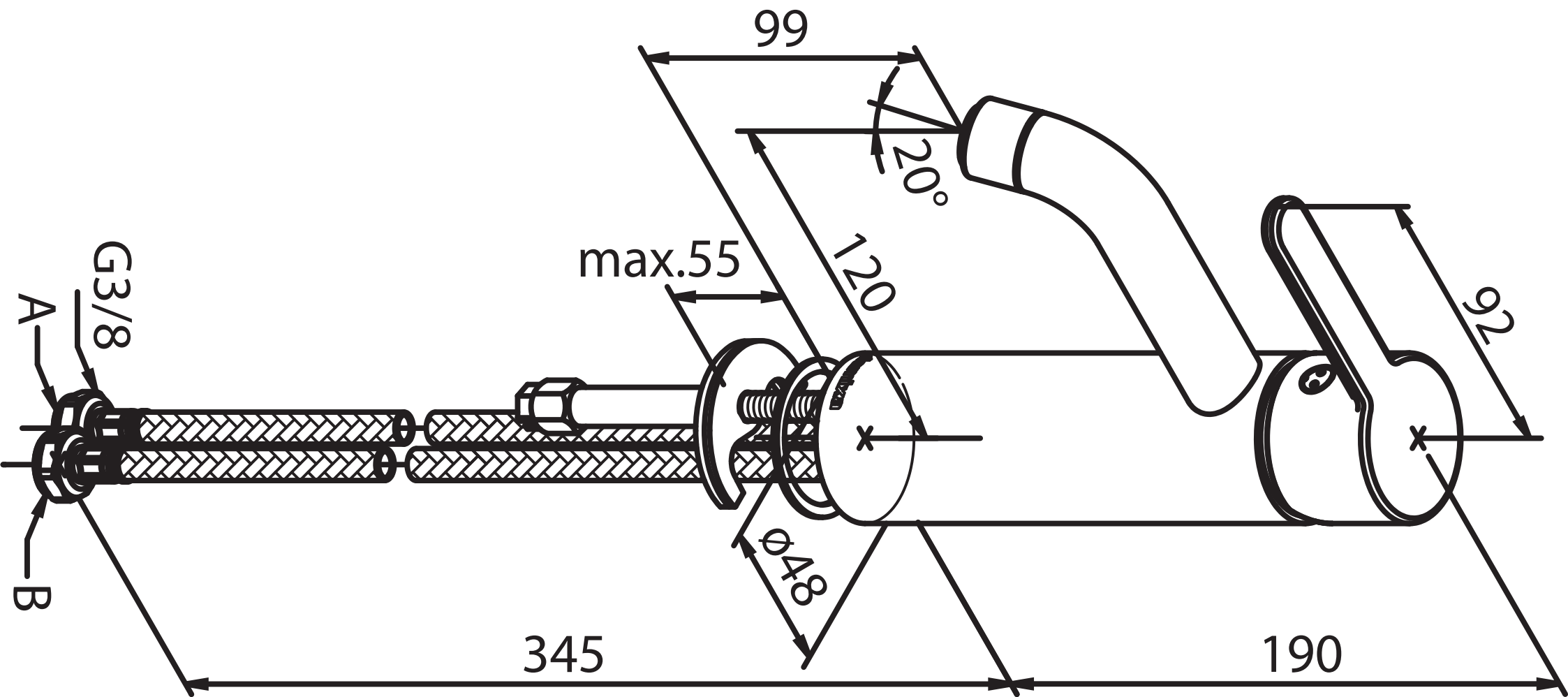
99
20°
max.55
120
92
G3/8
A
B
Φ48
345
190