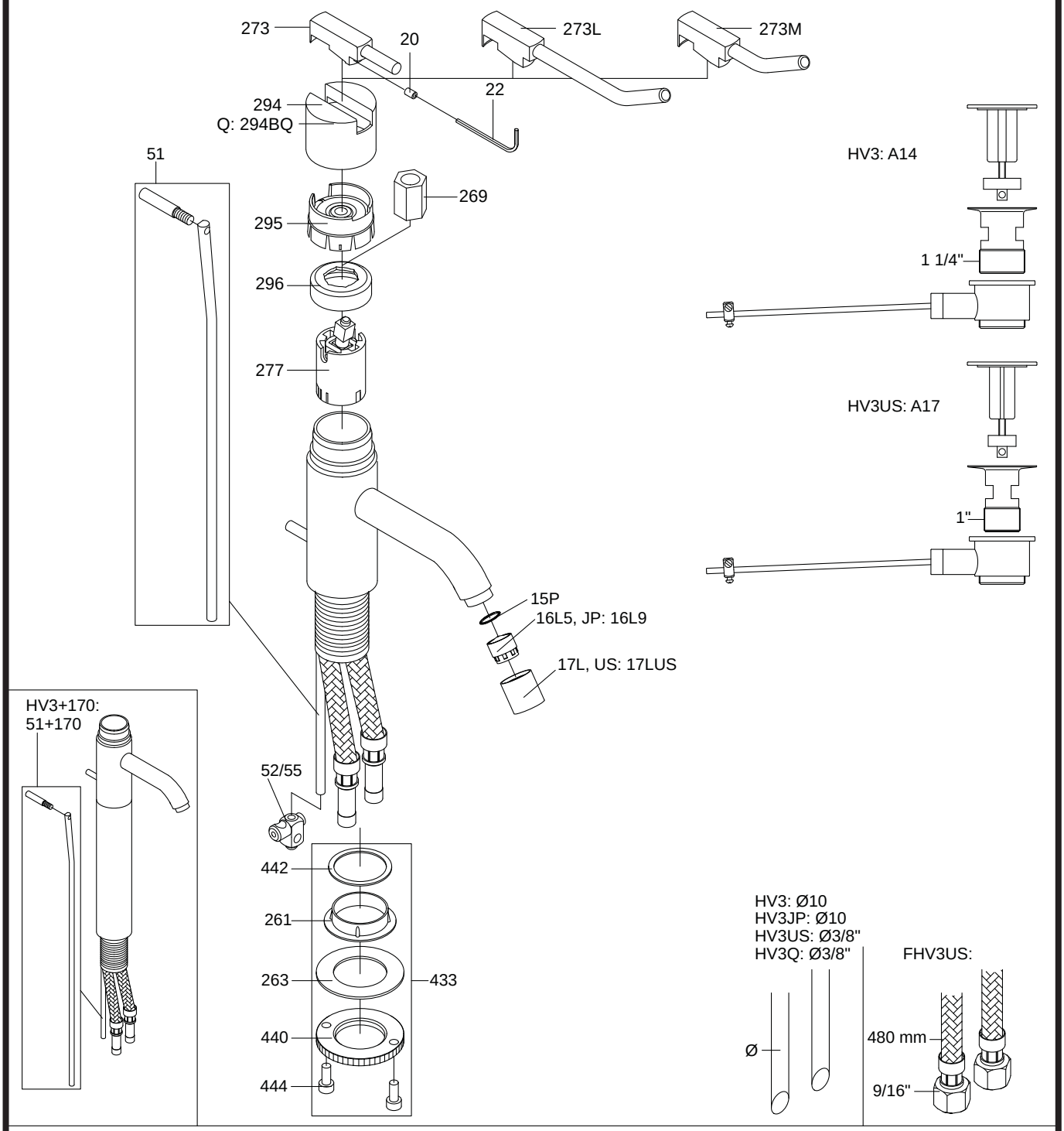

VR277K:	VR22, VR269, VR277
VR17LK5:	VR15P, VR16L5, VR17L
VR297:	VR20, VR22, VR269, VR273, VR277, VR294, VR295, VR296
VR433:	VR261, VR263, VR440, VR442, 2xVR444
NR.10:	VR20, VR22, VR293, VR294, VR295

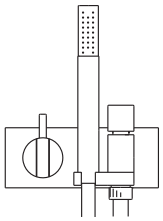

VOLA A/S
Lunavej 2
DK-8700 Horsens
Tlf : + 45 7023 5500
Fax: + 45 7023 5511
sales@vola.com
www.vola.com

VOLA HV3

FHV3 HV3JP
FHV3US HV3Q
HV3US

Dato
Mar. 11

Rev.
8

Blad
SB23.1

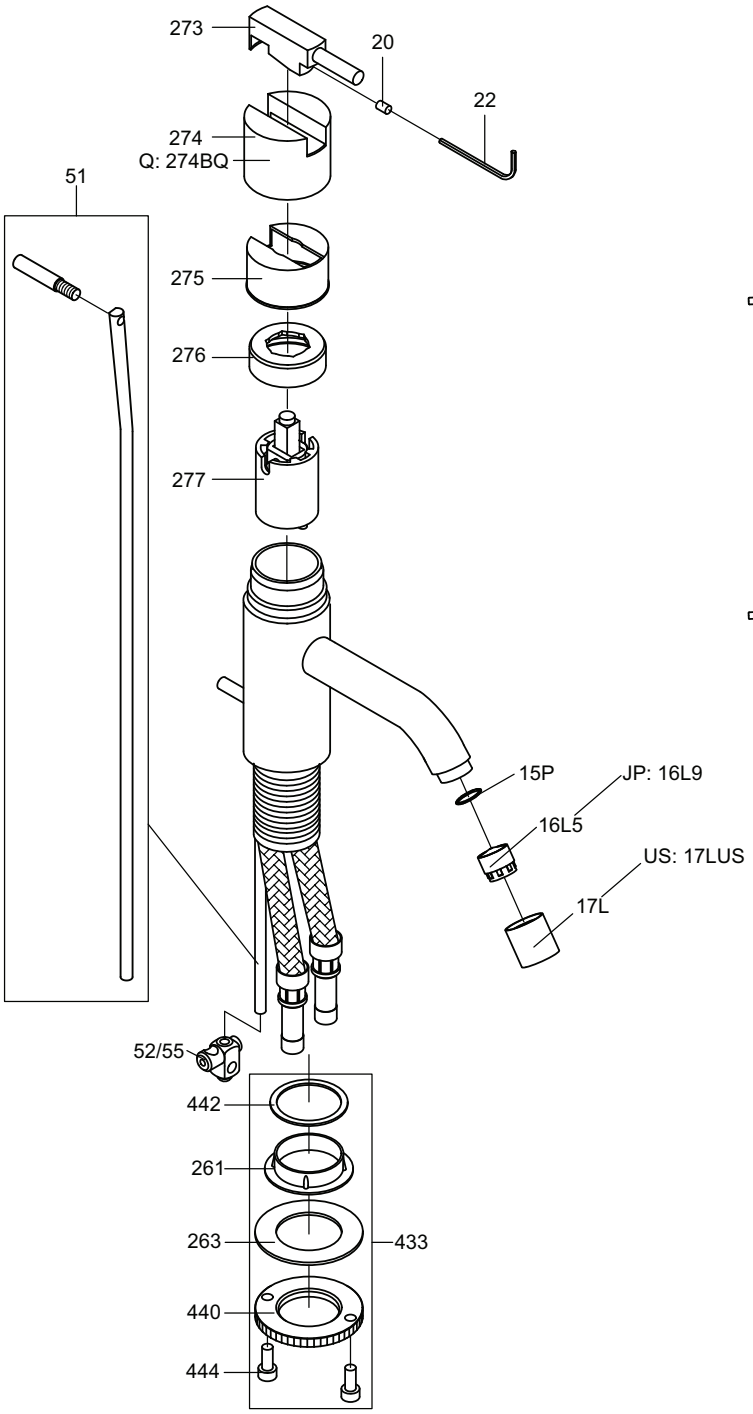

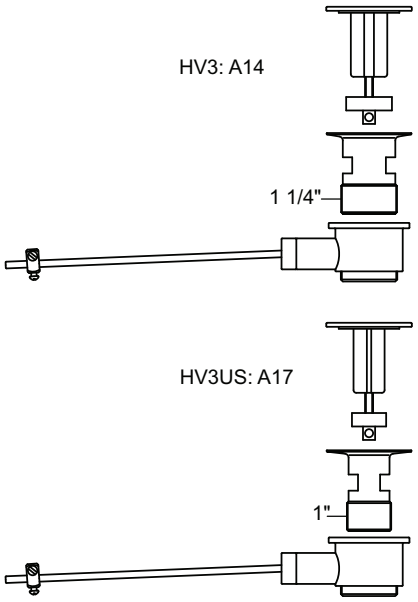

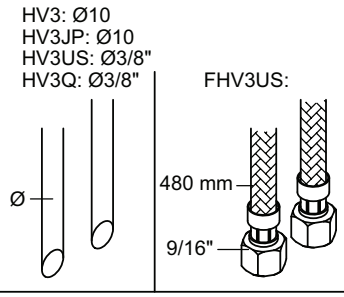

VR277K:	VR22, VR269, VR277
VR17LK5:	VR15P, VR16L5, VR17L
VR433:	VR261, VR263, VR440, VR442, 2xVR444
NR.10:	VR20, VR22, VR273, VR274, VR275

VOLA A/S
Lunavej 2
DK-8700 Horsens
Tlf : + 45 7023 5500
Fax: + 45 7023 5511
sales@vola.com
www.vola.com

VOLA HV3

FHV3 HV3JP
FHV3US HV3Q
HV3US

Dato
Sep. 09

Rev.
7

Blad
SB23.1