SC10

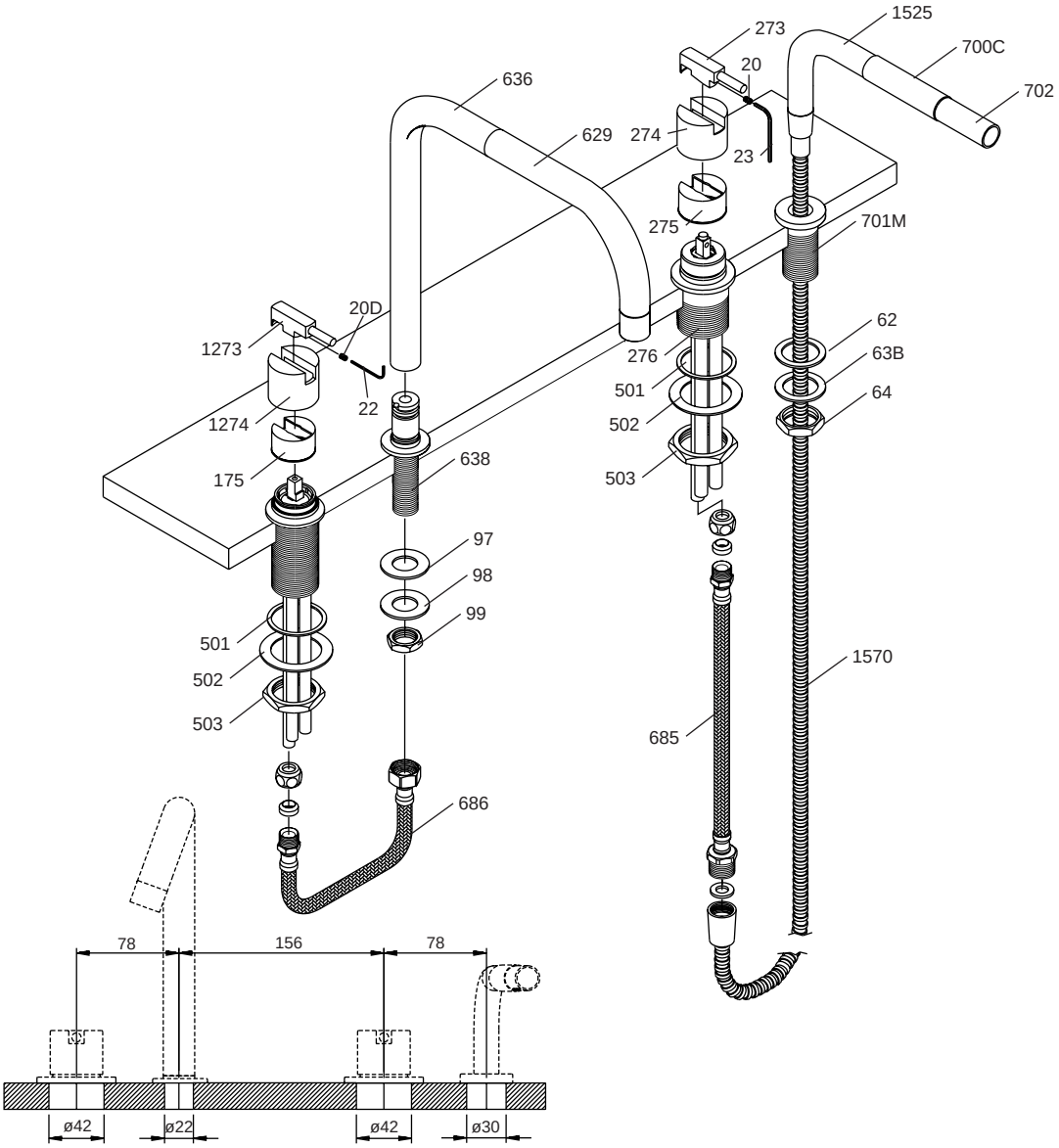

1 x Vola 2500
(Ø = 40 mm)

1 x Vola 090D/C
(Ø = 21 mm. Max 29 mm)

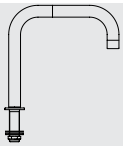

1 x Vola 500
(Ø = 40 mm)

1 x Vola T1M200
(Ø = 28 mm)

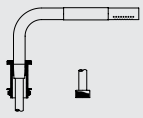

© Design Arne Jacobsen