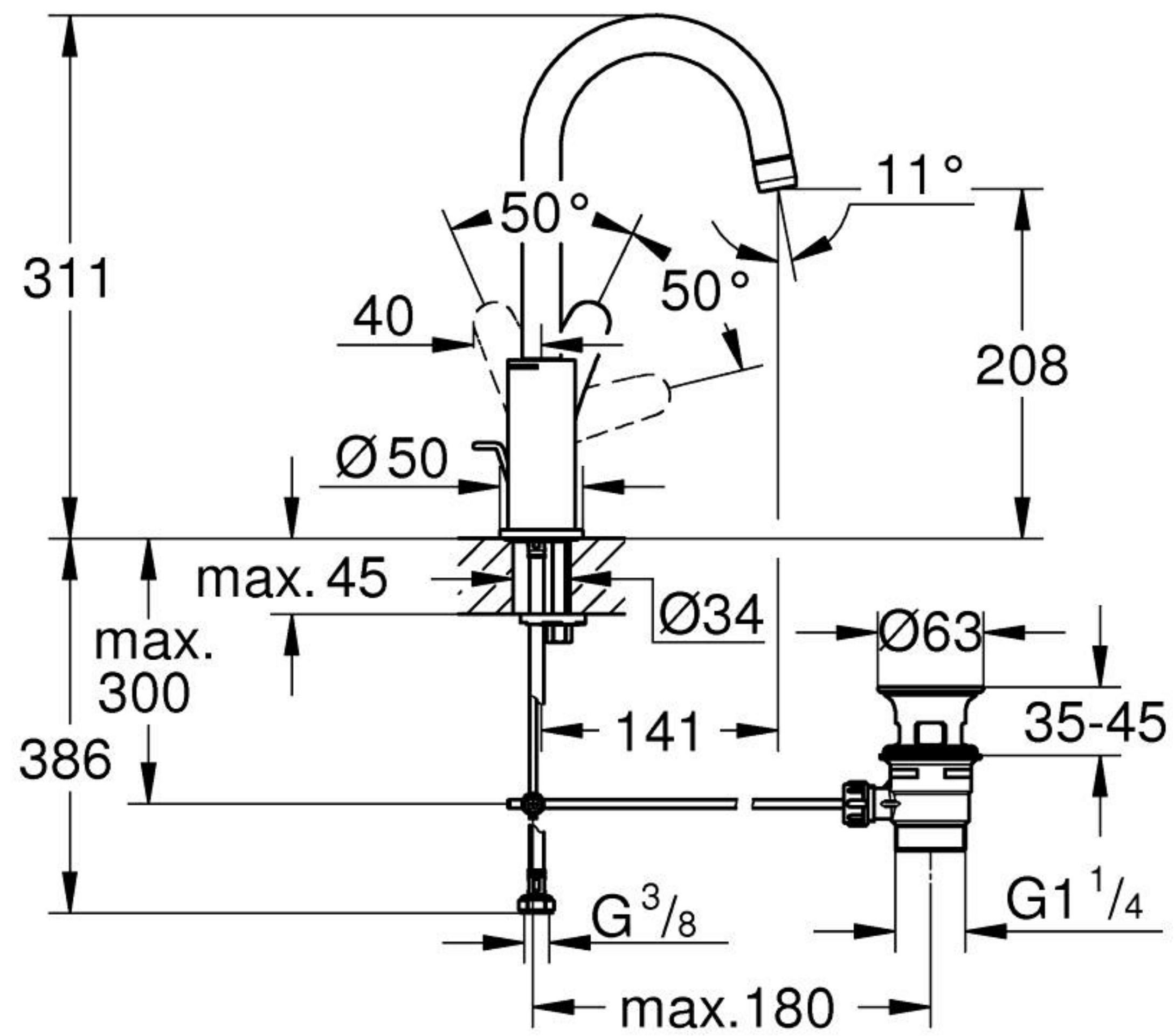
311
50°
50°
11°
40
208
Ø50
max. 45
Ø34
Ø63
max.
300
141
35-45
386
G 3/8
G1 1/4
max.180

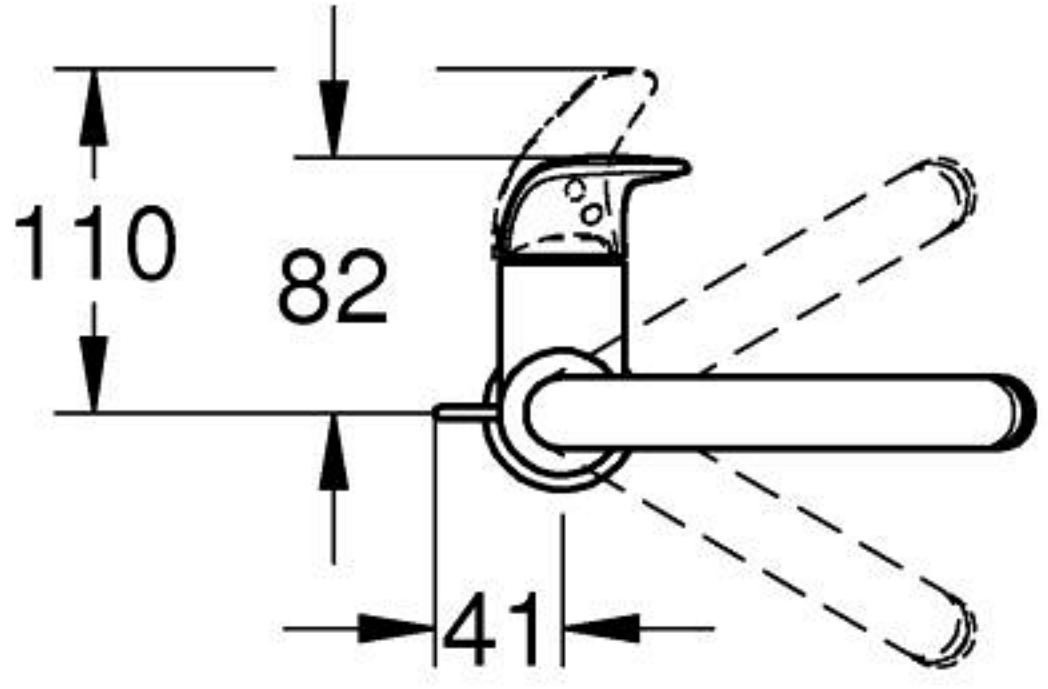
110
82
41