Max operating pressure:	4 bar
System temperature	-10 / +99 °C
Membrane temperature:	-10 / +70 °C
Factory precharge:	0.5 +/-20% bar
Nominal volume:	12 litres
Colour:	Red

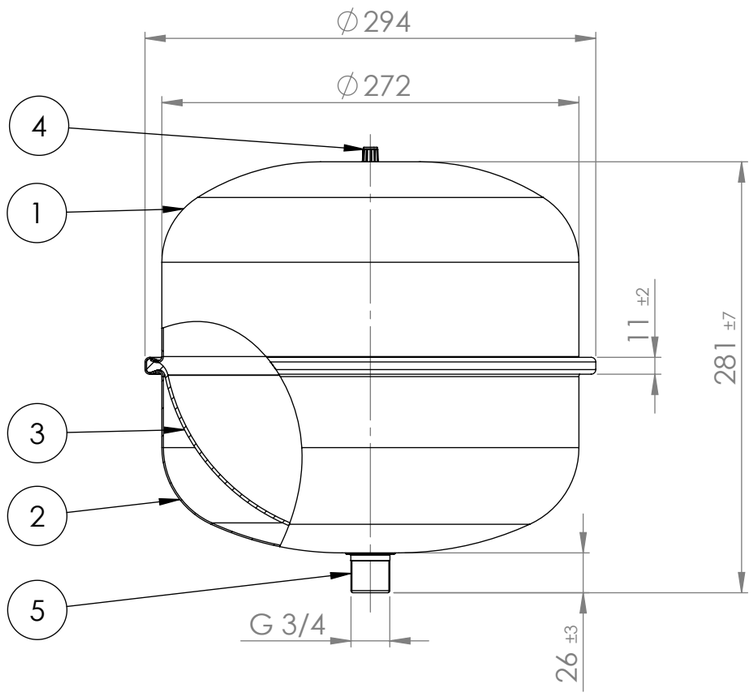

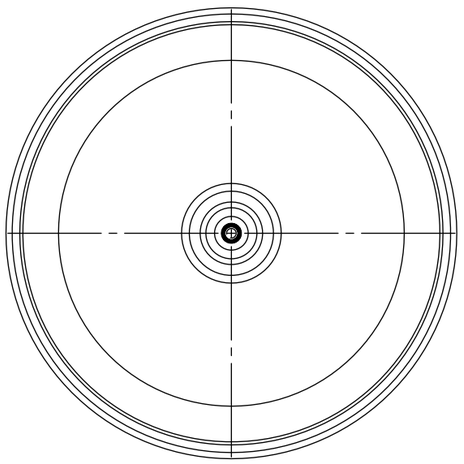

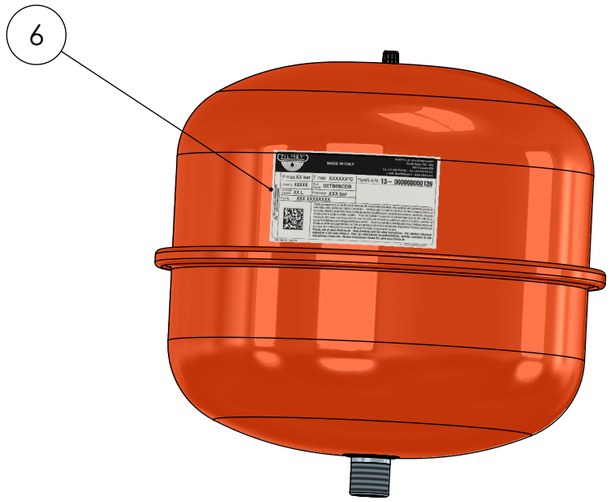

Pos.	Denomination	Q.ty	Material
1	UPPER HEAD	1	CARBON STEEL
2	DOWNER HEAD	1	CARBON STEEL
3	MEMBRANE	1	ZILAN N
4	PRECHARGE VALVE	1	-
5	THREADED NOZZLE	1	CARBON STEEL
6	SELF-ADHESIVE LABEL	1	-
-	-	-	-
-	-	-	-
-	-	-	-

Revisioni		
Rev.	Descrizione	Data
01	REDESIGNED WITH S.W.	24/02/2016

Zilmet S.p.a.
Via del Santo,242
35010 Limena (PD)-ITALY
Tel. +39 049 7664901
Fax +39 049 767321
www.zilmet.com
zilmet@zilmet.it

DENOMINATION
CAL-PRO 12L

DRAWING N°
20013

SCALE
1:4

*:Tolerance variation bigger/lower than 20%
do not compromise the expansion vessel functioning

DRAWN	DATE	SIGNATURE
BALDO A.	24/02/2016	
CHECKED	DATE	SIGNATURE
FALCOMER S.	24/02/2016	S. Falcomer
APPROVED	DATE	SIGNATURE
Sri. BENETTOLO	24/02/2016	

MATERIAL
--

CODE
1300001201

Dimensions in mm

This drawing is the property of company Zilmet S.p.a.
All rights reserved.

A3

All dimension tolerances not indicated are ± 2% for lenght and ± 3mm for diameter