Pace

Part of the Commercial Panels product category

Model	Pace Backlit CCT Multi Wattage 600x600 Panel UGR<19
Code	APAC1/60/2
Application	Ancillary, Commercial, Education, Healthcare, Industrial, Retail

GENERAL INFORMATION

Input	220-240V
Wattage	20-26.5-30W
Operating Temp	-20°C - 40°C
Lumens Delivered	2700lm - 3800lm(4000K)
lm/W	130lm/W (4000K)
CCT	3000K-4000K-6500K
UGR	19
Beam Angle	90

MATERIAL INFORMATION

Main Material	SGCC frame and SPCC backplate, PS diffusor,PS prismatic diffusor
Diffuser Material	PS
Product Weight without Packaging	1.553 kg
Colour / Finish	White

TECHNICAL INFORMATION

Class Protection	2
Light Source	LED
SDCM (Initial Macadam)	3
CRI	80
Internal / External	Internal
Surface / Recessed / Suspended	Ceiling, Recessed, Suspended
Power Factor	0.9
L70 @ 25°C	L70 B50 72,000

PRODUCT FEATURES

- Backlit LED panel suitable for education, commercial and ancilary area applications
- Slimline design allows for installation into shallow ceiling voids
- CCT selectable between 3000K, 4000K and 6500K and power selectable; offering a choice of 3 outputs, in one luminaire
- UGR<19 (unified glare rating) compliant luminaire assisting to eliminate glare for visual comfort
- Dimmable and OCTO options available

ACCESSORIES

APOD/1/3NM/DA	Panel Pod PRO DALI
APACLED/SK	Pace Backlit Suspension Kit
APRK/60	600x600 Plasterboard Recessed Kit
AARX60K/1	ARX 600x600 Anti-Ligature Kit
ADDIM/30/MC	Multi-current Dimmable Driver 30W
AIRMLED/POD/3NM/ST	Panel Pod Self-Test Emergency
AIRMLED/POD/MWS	Panel Pod Sensor
ASRF/60/1	600x600 Skylight Recessed Frame
ASMF60/2	ASMF60/2x80

Pace

5YR IP44 Emergency UGR <19 ON-SITE WARRANTY 2 YEARS

Part of the Commercial Panels product category
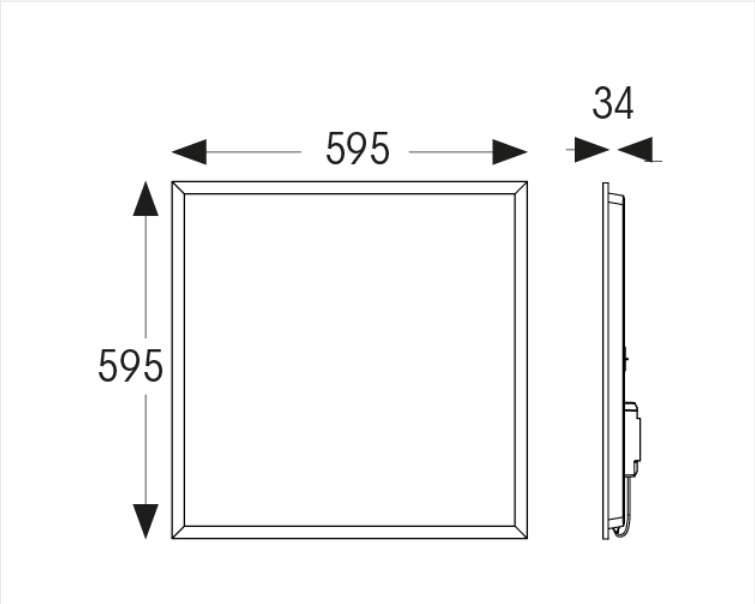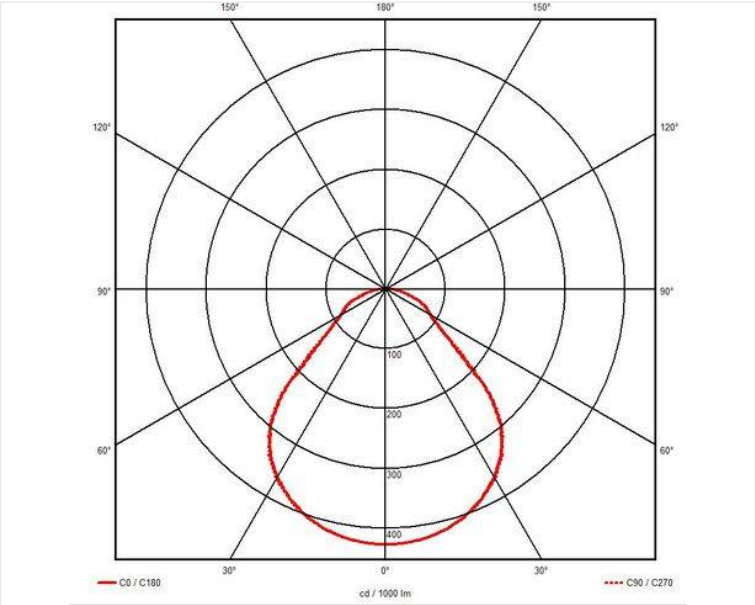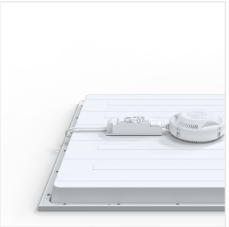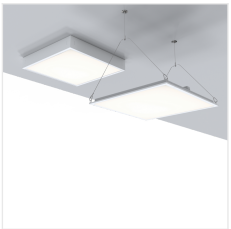
Model	Pace Backlit CCT Multi Wattage 600x600 Panel UGR<19
Code	APAC1/60/2
Application	Ancillary, Commercial, Education, Healthcare, Industrial, Retail