TAPS & FITTINGS UNIVERSAL SHOWERS

PRODUCT INFORMATION

1 . POSITION

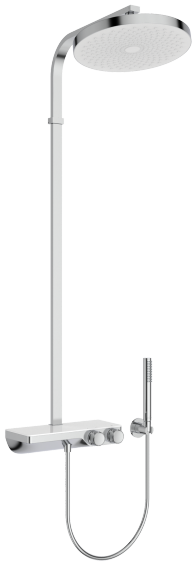

Article number	**TVS00003000061**
Article title	Villeroy & Boch Universal Showers Shower system, for wall-mounted, Chrome
Product designation	Shower system
Collection	Universal Showers
Assembly / Assembly type	wall-mounted
Scope of delivery	1 x shower rail with slide bar 1 x hand shower 1 x shower hose: 1600 mm 1 x rain shower 1 x thermostat 1 x installation instructions
Length in mm	517
Width in mm	314
Height in mm	1186
Weight in kg	6,30
Material	Brass
Colour name	Chrome
EAN number	4065467575689
Easy clean	EasyClean for easy cleaning and removal of limescale
Flow rate hand shower in litres per minute	9
Flow rate rain shower in litres per minute	12
Length of shower hose	1600
Material	Brass
Cartridge	Cartridge with ceramic discs
Hand shower diameter	25
Thermostat	Yes
Cool Tap	Yes

COLOUR

COLOUR DESIGNATION

Chrome

TECHNICAL DRAWINGS

TVS00003000061

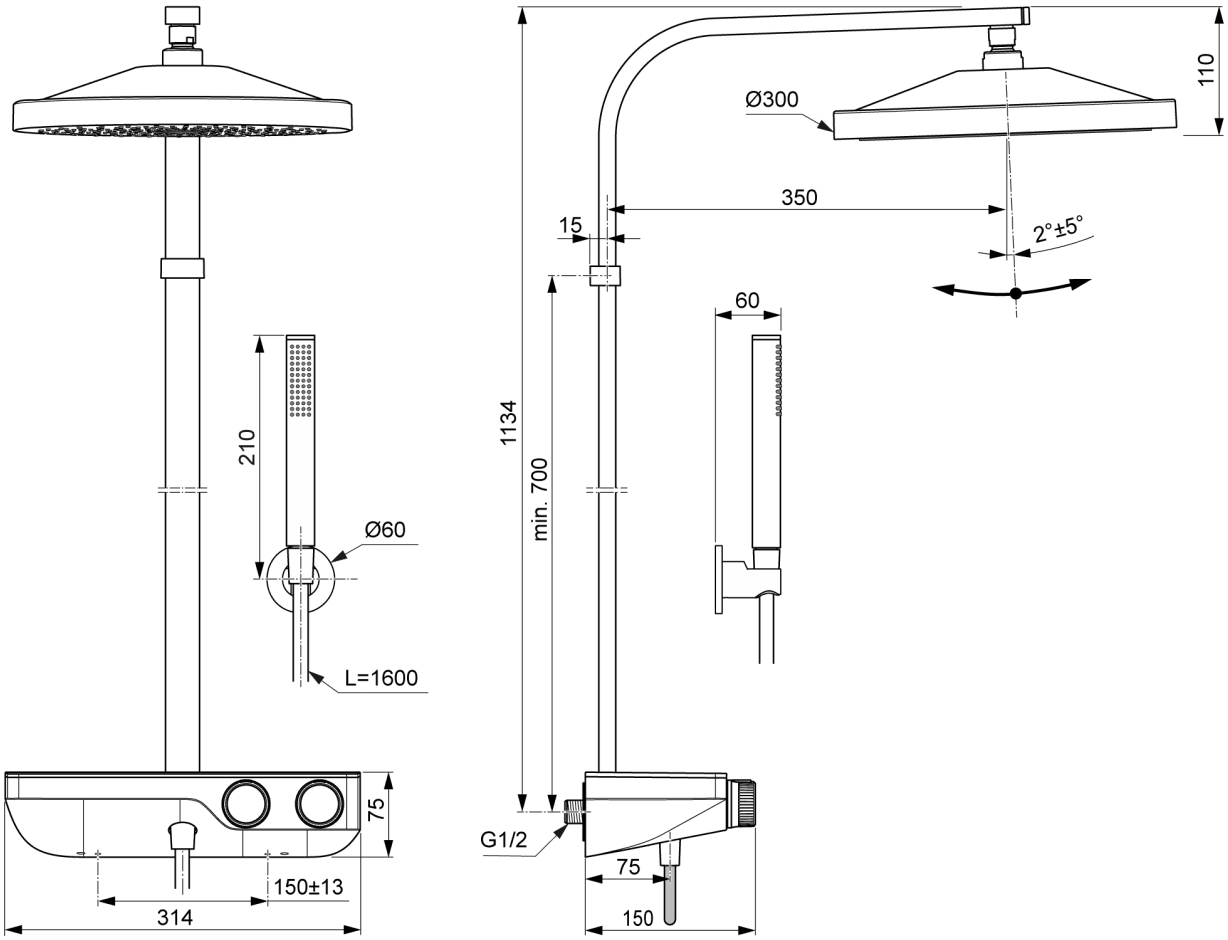

CHARACTERISTICS



EasyClean for easy cleaning and removal of limescale