DCB

3 PHASE HALF CONTROLLED LINE MODULE FOR DC-BUS APPLICATION

GENERAL DESCRIPTION

The DCB40-XXXX line modules are designed for multi-axes drive systems and provide a DC supply to mean and large power inverter.
The DCB40-XXX modules prevent high inrush current charging up the capacitor battery of the inverter gently ramping-up the DC voltage.
The three-phase half controlled SCR based power section covers a wide current and main voltage range.

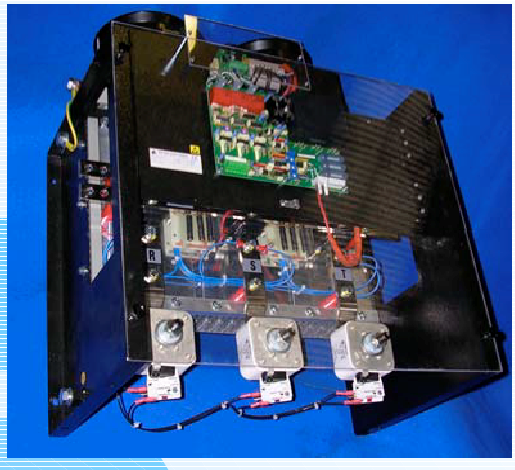

MAIN FEATURES

Wide current product range
Single regulation board over the whole portfolio increase modularity and spare parts replacement

OTHER FEATURES

Power supply up to 500Vac
ON board regulation and power fuses
External contact ramp enable
Internal or extarnal reference switch
Terminal board relay contacts for alarms
Digital inputs ad ouptuts protection
Safe SCR turn on technology

=
~

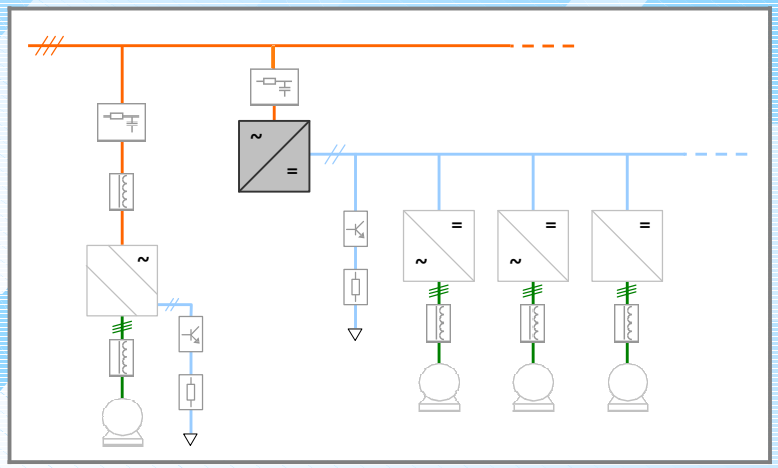

ORDERING DATA

DCB 40-450

- Rated current (from 130A to 2400A)
- Main power supply (from 200V to 500V)
  - 40... up to 415V a 200V
  - 44... up to da 460V
  - 48... up to da 500V
- DC-BUS 3-phase converter

APPLICATION TABLE / PRODUCT SELECTION

	(1)	(2)	(3)	Dimensions		
Converter	In A	Ith A	Ip A	L mm	H mm	P mm
DCB**XX**-130	130	145	160	190	270	345
DCB**XX** -165	165	185	200	190	270	345
DCB**XX** -250	250	280	310	190	270	345
DCB**XX** -450	450	500	550	500	531	320
DCB**XX** -575	575	650	720	500	631	320
DCB**XX** -800	800	900	1000	500	631	320
DCB**XX** -1100	1100	1200	1350	500	640	335
DCB**XX** -1300	1300	1450	1600	500	820	335
DCB**XX** -1550	1550	1800	1900	500	820	335
DCB**XX** -1800	1800	2000	2200	620	764	402
DCB**XX** -2400	2400	2700	3000	620	775	432

XX :
- 40 for power supply up to 380V +20% : standard version
- 44 for power supply up to 440V +20% : upon request
- 48 for power supply up to 480V +20% : upon request

1) Nomminal DC-BUS current for S1 service. (overload permitted) (CEI EN60146)
2) Thermal current for for S1 service (overload not permitted) (CEI EN60146)- class I
3) Overload curret; overload time: 30 sec. max – d.c = 1/20.

TECHNICAL SPECIFICATIONS

- Power supply and working cycle in accordance with CEI EN60146 (IEC146) - par. 131 EN61800.1
- Control board standard power supply 3x220V, 380V, 440V, 480V ±20% with internal voltage selection. 200V ±10%,235V ±10%,415V ±10%, 420V ±15%, 460V ±15%, 500V ±10%.
- Control board voltage limits :
  220V : da 176V a 264V
  380V: da 304V a 456V 440V:
  da 352V a 528V 480V: da
  384V a 576V
- Power supply derived from power section (3x400V) +15% max.
- Maximum voltage 3x500V ±10% (a richiesta, per DCB44...DCB48....).
- Frequency: 50Hz ±4% or 60Hz ±4% (selection via CV3).
- Forced air cooling through built-in fan: single phase 220V .
- Permissible air temperature: 0° to 40°C at nominal current; up to 65°C with 1,25% derating per grade.
- Normal Industrial ambient normale, see IEC 146 par.134/135, IEC 68 EN61800.1.
- Protection degree: IP00 according to IEC 144 - DIN40050.
- Isolation: in accordance with IEC 326 EN60664- VDE0110 GRC/B.
- 3 thyristors + 3 diodes bridge (3phase ahlf controlled Graetz B6HK) . Six pulses per cycle at amximum voltage.
- One quadrant open and closed loop (voltage).
- Positive logic inputs: (standard +24V +20% 5mA)
- Relay outputs : 5A/250V
- Standard auxiliary circuits:
  - Turn-on ramp: 2÷20 sec.
  - Voltage loop control (no current loop)