No. ACDR1CE2 2008.08

This manual contains instructions for communication functions of the ACD-13A, ACR-13A, ACD-15A and ACR-15A.

Serial communication and Console communication cannot be used together.
When performing Serial communication, remove the exclusive cable (CMB) from the USB port of the PC and console connector of the ACD/R-13A, ACD/R-15A.
When performing Console communication, it is not required to remove the Serial communication cables.
However, do not send a command from the master side.

1. System configuration

RS-232C (C option)

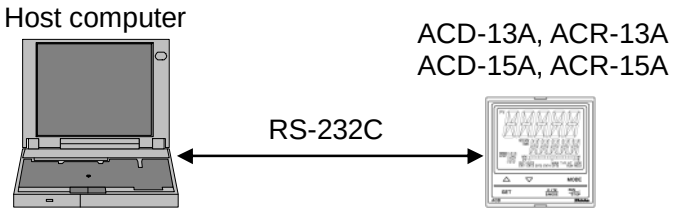

(Fig. 1-1)

RS-485 Multi-drop connection communication (C5 option)

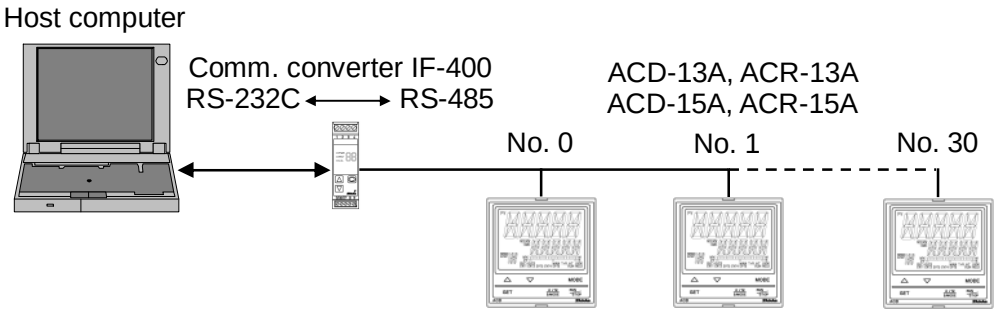

(Fig. 1-2)

2. Wiring

RS-232C (C option)

- **D-sub 9-pin connector**

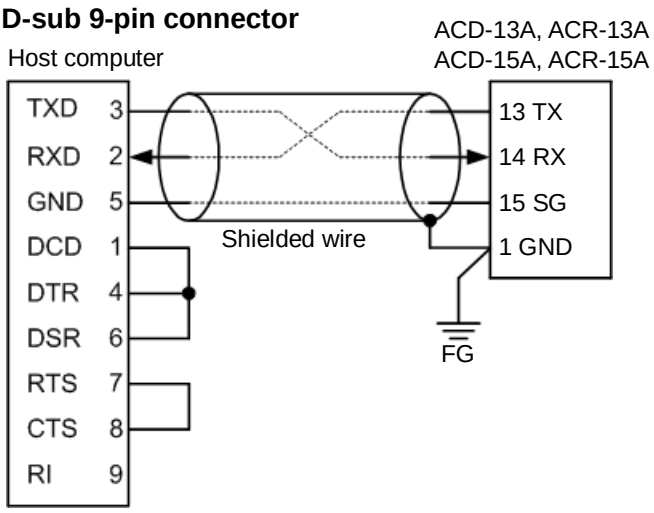

(Fig. 2-1)

- **D-sub 25-pin connector**

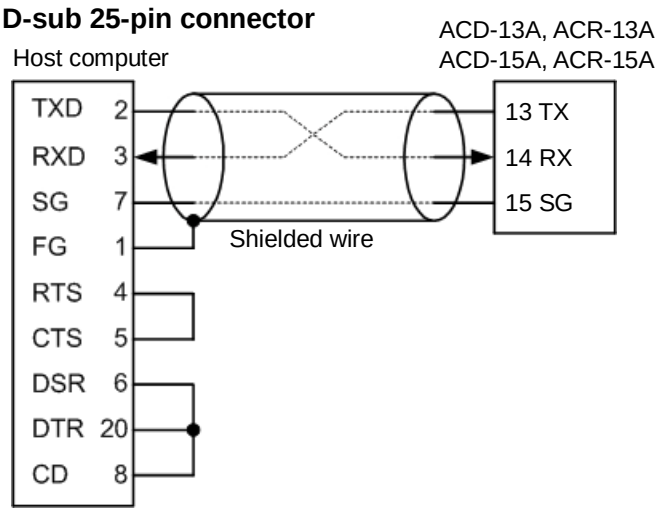

(Fig. 2-2)

RS-485 (C5 option)

When using communication converter IF-400

• D-sub 9-pin connector

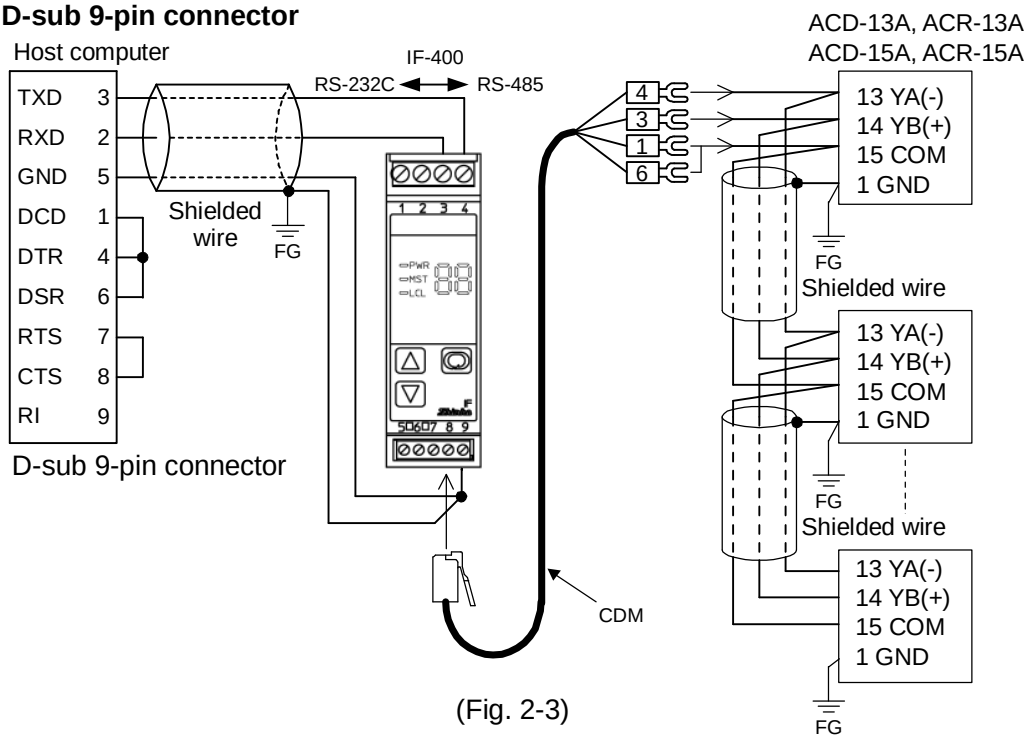

(Fig. 2-3)

• D-sub 25-pin connector

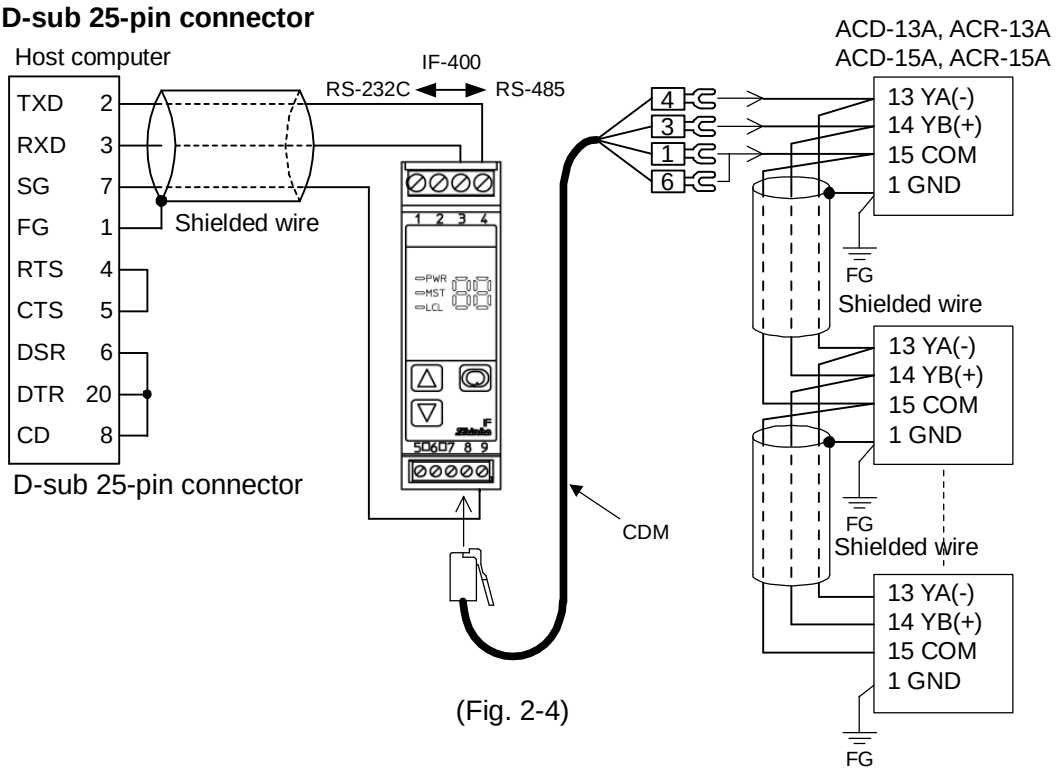

(Fig. 2-4)

Shielded wire

Connect only one side of the shielded wire to the FG or GND terminal so that current cannot flow to the shielded wire. If both sides of the shielded wire are connected to the FG or GND terminal, the circuit will be closed between the shielded wire and the ground. As a result, current will run through the shielded wire and this may cause noise.

Be sure to ground FG or GND terminal.

Recommended cable: OTSC-VB 2PX0.5SQ (made by Onamba Co., Ltd.) or equivalent (Use a twisted pair cable.)

Terminator (Terminal resistor)

Communication converter IF-400 (sold separately) has a built-in terminator.

The terminator is mounted at the end of the wire when connecting a personal computer with multiple peripheral devices. The terminator prevents signal reflection and disturbance.

Do not connect terminator with the communication line because each ACD/R-13A, ACD/R-15A has built-in pull-up and pull-down resistors instead of a terminator.

3. Communication parameter setting

Set each communication parameter following the procedures below.

(1) G_ENG Set the SET key 4 times in the PV/SV display mode.
The unit will enter the Engineering group.

(2) E_INP Press the MODE key once. The unit will proceed to the Input group.

(3) E_coM Press the SET key several times until characters of the Communication group appear.

(4) cMtL NoML Press the MODE key once.
The unit will proceed to the Communication protocol selection.

- To set each setting item, use the △ or ▽ key.
- If the MODE key is pressed, the set value is registered, and the unit proceeds to the next setting item.
  If the MODE key is pressed at the SVTC bias setting, the unit proceeds to the Communication protocol selection.
- Pressing the A/M B.MODE key reverts to the previous setting item.
- Pressing the A/M B.MODE key for 1sec reverts to the previous setting level (reverts from setting item to each group).
- If the MODE key is pressed for 3sec in any setting mode, the unit reverts to the PV/SV display mode.

Character	Name, Function, Setting range	Default value
cMtL NoML	**Communication protocol** • Selects the communication protocol. • NoML: Shinko protocol ModA: Modbus ASCII mode ModR: Modbus RTU mode	Shinko protocol
cMNo 0	**Instrument number** • Sets the instrument number individually to each instrument when communicating by connecting plural instruments in serial communication. • Setting range: 0 to 95	0
cMtP 96	**Communication speed** • Selects a communication speed equal to that of the host computer. When using IF-400 communication converter (sold separately), select 9600bps or 19200bps. • 96 : 9600bps 192 : 19200bps 384 : 38400bps	9600bps
cMFr 7EVN	**Data bit/Parity** • Selects data bit and parity. • 8NoN : 8 bits/No parity 7NoN : 7 bits/No parity 8EVN : 8 bits/Even parity 7EVN : 7 bits/Even parity 8odd : 8 bits/Odd parity 7odd : 7 bits/Odd parity	7 bits/Even parity
cMtr 1	**Stop bit** • Selects the stop bit. • 1 : 1 2 : 2	1
tV_b 0	**SVTC bias** • By connecting to Shinko programmable controllers [PC-900 and PCD-33A with SVTC (Set value digital transmission) option], digital set values via the SVTC command can be received from the programmable controllers. See chapter 8 on p.23. • Control desired value (SV) adds SVTC bias value to the value received by the SVTC command. • Available only when Shinko protocol is selected during communication protocol selection. • Setting range: Converted value of ±20% of the input span DC voltage, current input: ±20% of the scaling span (The placement of the decimal point follows the selection.)	0℃

4. Communication procedure

Communication starts with command transmission from the host computer (hereafter Master) and ends with the response of the ACD/R-13A, ACD/R-15A (hereafter Slave).

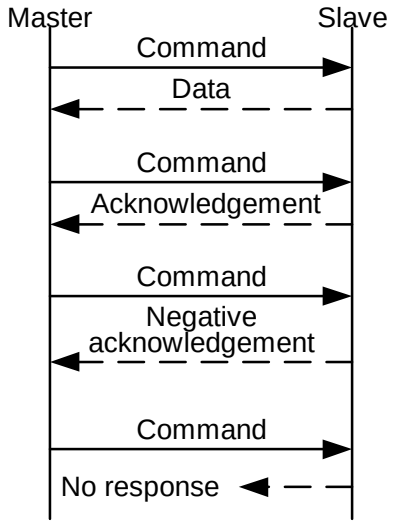

(Fig.4-1)

- **Response with data**
  When the master sends the reading command, the slave responds with the corresponding set value or current status.
- **Acknowledgement**
  When the master sends the setting command, the slave responds by sending the acknowledgement after the processing is terminated.
- **Negative acknowledgement**
  When the master sends a non-existent command or value out of the setting range, the slave returns a negative acknowledgement.
- **No response**
  The slave will not respond to the master in the following cases:
  - Global address (Shinko protocol) is set.
  - Broadcast address (Modbus protocol) is set.
  - Communication error (framing error, parity error)
  - Checksum error (Shinko protocol), LRC discrepancy (Modbus ASCII mode), CRC-16 discrepancy (Modbus RTU mode)

Communication timing of the RS-485

Master side (Notice on programming)

Set the program so that the master can disconnect the transmitter from the communication line within a 1 character transmission period after sending the command in preparation for reception of the response from the slave.
To avoid the collision of transmissions between the master and the slave, send the next command after carefully checking that the master received the response.

Slave side

When the slave starts transmission through a communication line, the slave is arranged so as to provide an idle status (mark status) transmission period of 1 or more characters before sending the response to ensure synchronization on the receiving side.
The slave is arranged so as to disconnect the transmitter from the communication line within a 1 character transmission period after sending the response.

5. Shinko protocol

5.1 Transmission mode

Shinko protocol is composed of ASCII.
Hexadecimal (0 to 9, A to F), which is divided into high order (4-bit) and low order (4-bit) out of 8-bit binary data in command is transmitted as ASCII characters.

Data format
- Start bit : 1 bit
- Data bit : 7 bits (8bits) Selectable
- Parity : Even (Odd, No parity) Selectable
- Stop bit : 1 bit (2 bits) Selectable

Error detection: Checksum

5.2 Command configuration

All commands are composed of ASCII.
The data (set value, decimal number) is represented with hexadecimal number.
The negative numbers are represented with 2's complement.
Numerals written below the command represent number of characters.

(1) Setting command

Header (02H)	Address	Sub address (20H)	Command type (50H)	Data item	Data	Checksum	Delimiter (03H)
1	1	1	1	4	4	2	1

(2) Reading command

Header (02H)	Address	Sub address (20H)	Command type (20H)	Data item	Checksum	Delimiter (03H)
1	1	1	1	4	2	1

(3) Response with data

Header (06H)	Address	Sub address (20H)	Command type (20H)	Data item	Data	Checksum	Delimiter (03H)
1	1	1	1	4	4	2	1

(4) Acknowledgement

Header (06H)	Address	Checksum	Delimiter (03H)
1	1	2	1

(5) Negative acknowledgement

Header (15H)	Address	Error code	Checksum	Delimiter (03H)
1	1	1	2	1

Header : Control code to represent the beginning of the command or the response.
ASCII codes are used.
Setting command, Reading command : STX (02H) fixed
Response with data, Acknowledgement : ACK (06H) fixed
Negative acknowledgement : NAK (15H) fixed

Instrument number (Address): Numbers by which the master discerns each slave.
Instrument number 0 to 94 and Global address 95.
ASCII codes (20H to 7FH) are used by adding 20H to instrument numbers 0 to 95 (00H to 5FH).
95 (7FH) is called Global address, which is used when the same command is sent to all the slaves connected. However, the response is not returned.

Sub address : 20H fixed

Command type : Code to discern Setting command (50H) and Reading command (20H)

Data item : Data classification of the command object.
Composed of hexadecimal 4 digits, using ASCII.
(Refer to “7. Communication command table”.)

Data : The contents of data (set value) differs depending on the setting command.
Composed of hexadecimal 4 digits, using ASCII.
(Refer to “7. Communication command table”.)

Checksum : 2-character data to detect communication errors. (Refer to “5.3 Checksum calculation”.)

Delimiter : Control code to represent the end of command
ASCII code ETX (03H) fixed

Error code : Represents an error type with ASCII codes.
1 (31H)-----Non-existent command
2 (32H)-----Not used
3 (33H)-----Setting outside the setting range
4 (34H)-----Status which cannot be set (e.g. AT is performing)
5 (35H)-----During setting mode by keypad operation

5.3 Checksum calculation

Checksum is used to detect receiving errors in the command or data.
Set the program for the master side as well to calculate the checksum of the response data from the slaves so that communication errors can be checked.

The ASCII code (hexadecimal) corresponding to the characters which range from the address to that before the checksum is converted to binary notation, and the total value is calculated.
The lower 2-digit of the total value are converted to 2’s complements, and then to hexadecimal figures, that is, ASCII code for the checksum.

Checksum calculation example

SV: 600℃ (0258H)

Address (instrument number): 0 (20H)

- 1's complement: Reverse each binary bit. 0 will become 1 and vice versa.
- 2's complement: Add 1 to 1's complements.

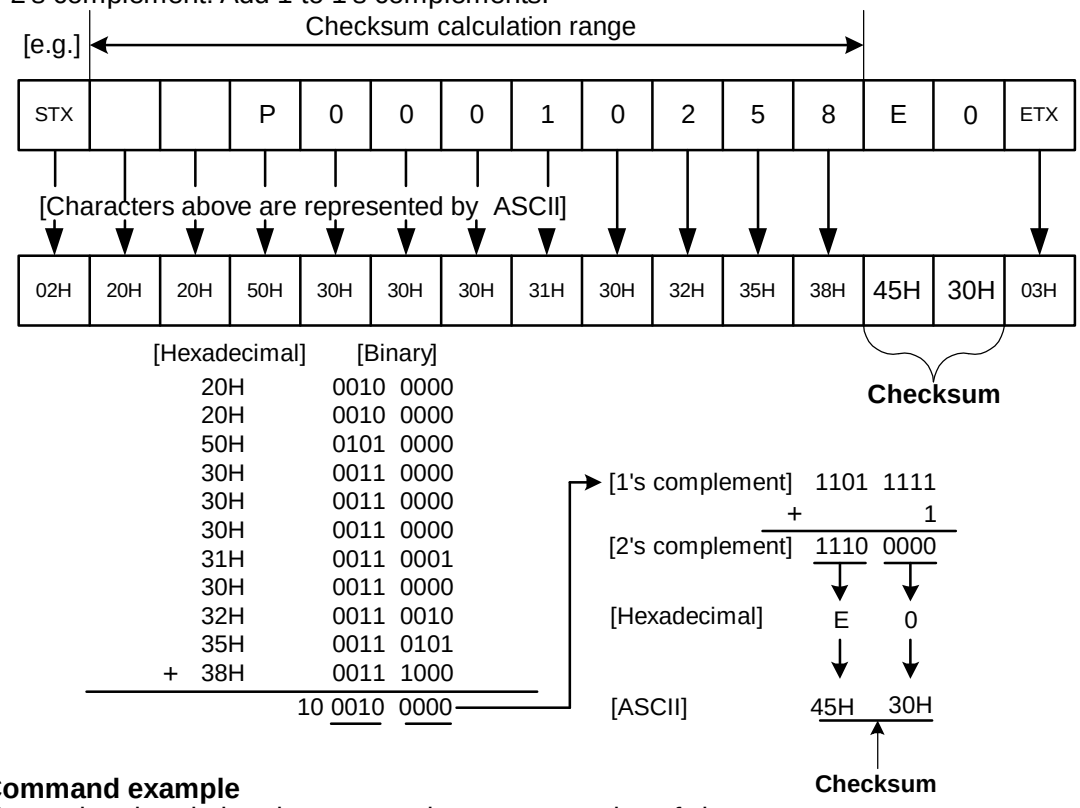

5.4 Command example

Numerals written below the command represent number of characters.

(1) Reading (Address 1, PV)

- Reading command from the master

Header	Address	Sub address	Command type	Data item [0A00H]	Checksum	Delimiter
(02H)	(21H)	(20H)	(20H)	(30H 41H 30H 30H)	(46H 44H)	(03H)
1	1	1	1	4	2	1

- A response from the slave in normal status [When PV=600℃ (0258H)]

Header	Address	Sub address	Command type	Data item [0A00H]	Data [0258H]	Checksum	Delimiter
(06H)	(21H)	(20H)	(20H)	(30H 41H 30H 30H)	(30H 32H 35H 38H)	(46H 46H)	(03H)
1	1	1	1	4	4	2	1

(2) Reading (Address 1, SV)

- Reading command from the master

Header	Address	Sub address	Command type	Data item [0001H]	Checksum	Delimiter
(02H)	(21H)	(20H)	(20H)	(30H 30H 30H 31H)	(44H 45H)	(03H)
1	1	1	1	4	2	1

- A response from the slave in normal status [When SV=600℃ (0258H)]

Header	Address	Sub address	Command type	Data item [0001H]	Data [0258H]	Checksum	Delimiter
(06H)	(21H)	(20H)	(20H)	(30H 30H 38H 30H)	(30H 32H 35H 38H)	(30H 46H)	(03H)
1	1	1	1	4	4	2	1

(3) Setting (Address 1, SV) [when setting SV to 600℃ (0258H)]

- Setting command from the master

Header	Address	Sub address	Command type	Data item [0001H]	Data [0258H]	Checksum	Delimiter
(02H)	(21H)	(20H)	(50H)	(30H 30H 30H 31H)	(30H 32H 35H 38H)	(44H 46H)	(03H)
1	1	1	1	4	4	2	1

- A response from the slave in normal status

Header	Address	Checksum	Delimiter
(06H)	(21H)	(44H 46H)	(03H)
1	1	2	1

6. Modbus protocol

6.1 Transmission mode

There are 2 transmission modes (ASCII and RTU) in Modbus protocol.

6.2 ASCII mode

Hexadecimal (0 to 9, A to F), which is divided into high order (4-bit) and low order (4-bit) out of 8-bit binary data in command is transmitted as ASCII characters.

Data format Start bit : 1 bit
Data bit : 7 bits (8 bits) Selectable
Parity : Even (Odd, No parity) Selectable
Stop bit : 1 bit (2 bits) Selectable
Error detection : LRC (Longitudinal Redundancy Check)
Data interval : 1 second or less (Max.1sec of interval between characters)

(1) Message configuration

ASCII mode message is configured to start by Header [: (colon)(3AH)] and end by Delimiter [CR (carriage return) (0DH) + LF (Line feed)(0AH)].

Header (:)	Slave address	Function Code	Data	Error check LRC	Delimiter (CR)	Delimiter (LF)

Slave address

Slave address is an individual instrument number on the slave side, and is set within the range 0 to 95 (00H to 5FH).
The master identifies slaves by the slave address of the requested message.
The slave informs the master which slave is responding to the master by placing its own address in the response message.
Slave address 0 (00H, broadcast address) can identify all the slaves connected. However slaves do not respond.

Function code

The function code is the command code for the slave to undertake the following action types.

Function code	Contents
03 (03H)	Reading the set value and information from slaves
06 (06H)	Setting to slaves

Function code is used to discern whether the response is normal (acknowledgement) or if any error (negative acknowledgement) has occurred when the slave returns the response message to the master.
When acknowledgement is returned, the slave simply returns the original function code.
When negative acknowledgement is returned, the MSB of the original function code is set as 1 for the response.
For example, when the master sends request message setting 10H to the function code by mistake, slave returns 90H by setting the MSB to 1, because the former is an illegal function.
For negative acknowledgement, the exception codes below are set to the data of the response message and returned to the master in order to inform it of what kind of error has occurred.

Exception code	Contents
1 (01H)	Illegal function (Non-existent function)
2 (02H)	Illegal data address (Non-existent data address)
3 (03H)	Illegal data value (Value out of the setting range)
17 (11H)	Shinko protocol error code 4 (Status which cannot be set, e.g. AT is performing)
18 (12H)	Shinko protocol error code 5 (During setting mode by keypad operation)

Data

Data differs depending on the function code.
A request message from the master is composed of data item, number of data and setting data.
A response message from the slave is composed of a number of bytes, data and exception codes in negative acknowledgements. The number of data to be dealt with in one message is “1”.
Therefore the number of data is fixed as (30H)(30H)(30H)(31H).
Effective range of data is -32768 to 32767 (8000H to 7FFFH).

Error check: 2-character data to detect communication errors.
Refer to “(2) Error check of ASCII mode”. (p.8)

(2) Error check of ASCII mode

After calculating LRC (Longitudinal Redundancy Check) from the slave address to the end of data, the calculated 8-bit data is converted to two ASCII characters and are appended to the end of message.

How to calculate LRC

① Create a message in RTU mode.
② Add all the values from the slave address to the end of data. This is assumed as X.
③ Make a complement for X (bit reverse). This is assumed as X.
④ Add a value of 1 to X. This is assumed as X.
⑤ Set X as an LRC to the end of the message.
⑥ Convert the whole message to ASCII characters.

(3) Message example of ASCII mode

Numerals written below the command represent number of characters.

① **Reading (Slave address 1, PV)**

• A request message from the master
The number of data means the data item to be read, and it is fixed as 1 (30H 30H 30H 31H).

Header	Slave address	Function code	Data item	Number of data	Error check	Delimiter
(3AH)	(30H 31H)	(30H 33H)	[0A00H] (30H 41H 30H 30H)	[0001H] (30H 30H 30H 31H)	LRC (46H 31H)	CR+LF (0DH 0AH)
1	2	2	4	4	2	2

• Response message from the slave in normal status [When PV=600℃ (0258H)]
The number of response byte means the number of byte of the data which has been read, and it is fixed as 2 (30H 32H).

Header	Slave address	Function code	Number of response byte	Data	Error check	Delimiter
(3AH)	(30H 31H)	(30H 33H)	[02H] (30H 32H)	[0258H] (30H 32H 35H 38H)	LRC (41H 30H)	CR+LF (0DH 0AH)
1	2	2	2	4	2	2

② **Reading (Slave address 1, SV)**

• A request message from the master
The number of data means the data item to be read, and it is fixed as 1 (30H 30H 30H 31H).

Header	Slave address	Function code	Data item	Number of data	Error check	Delimiter
(3AH)	(30H 31H)	(30H 33H)	[0001H] (30H 30H 30H 31H)	[0001H] (30H 30H 30H 31H)	LRC (46H 41H)	CR+LF (0DH 0AH)
1	2	2	4	4	2	2

• Response message from the slave in normal status [When SV=600℃ (0258H)]
The number of response byte means the number of byte of the data which has been read, and it is fixed as 2 (30H 32H).

Header	Slave address	Function code	Number of response byte	Data	Error check	Delimiter
(3AH)	(30H 31H)	(30H 33H)	[02H] (30H 32H)	[0258H] (30H 32H 35H 38H)	LRC (41H 30H)	CR+LF (0DH 0AH)
1	2	2	2	4	2	2

• Response message from the slave in exception (error) status (When a data item has been mistaken)
The function code MSB is set to 1 for the response message in exception (error) status [83H (38H 33H)].
The exception code 02H (30H 32H: Non-existent data address) is returned (error).

Header	Slave address	Function code	Exception code	Error check	Delimiter
(3AH)	(30H 31H)	(38H 33H)	[02H] (30H 32H)	LRC (37H 41H)	CR+LF (0DH 0AH)
1	2	2	2	2	2

③ **Setting (Slave address 1, SV)** [When setting SV to 600℃ (0258H)]

• A request message from the master

Header	Slave address	Function code	Data item	Data	Error check	Delimiter
(3AH)	(30H 31H)	(30H 36H)	[0001H] (30H 30H 30H 31H)	[0258H] (30H 32H 35H 38H)	LRC (39H 45H)	CR+LF (0DH 0AH)
1	2	2	4	4	2	2

• Response message from the slave in normal status

Header	Slave address	Function code	Data item	Data	Error check	Delimiter
(3AH)	(30H 31H)	(30H 36H)	[0001H] (30H 30H 30H 31H)	[0258H] (30H 32H 35H 38H)	LRC (39H 45H)	CR+LF (0DH 0AH)
1	2	2	4	4	2	2

• Response message from the slave in exception (error) status (When a value out of the setting range is set)
The function code MSB is set to 1 for the response message in exception (error) status [86H (38H 36H)].
The exception code 03H (30H 33H: Value out of the setting range) is returned (error).

Header	Slave address	Function code	Exception code [03H]	Error check LRC	Delimiter CR+LF
(3AH)	(30H 31H)	(38H 36H)	(30H 33H)	(37H 36H)	(0DH 0AH)
1	2	2	2	2	2

6.3 RTU mode

8-bit binary data in command is transmitted as it is.

Data format Start bit : 1 bit
Data bit : 8 bits
Parity : No parity (Even, Odd) Selectable
Stop bit : 1 bit (2 bits) Selectable

Error detection : CRC-16 (Cyclic Redundancy Check)

Data interval : 3.5 character transmission times or less
To transmit continuously, an interval between characters which consist of one message, must be within 3.5 character transmission times.

(1) Message configuration

RTU mode is configured to start after idle time is processed for more than 3.5 character transmissions, and end after idle time is processed for more than 3.5 character transmissions.

3.5 idle characters	Slave address	Function Code	Data	Error check CRC-16	3.5 idle characters

Slave address

Slave address is an individual instrument number on the slave side, and is set within the range 0 to 95 (00H to 5FH).
The master identifies slaves by the slave address of the requested message.
The slave informs the master which slave is responding to the master by placing its own address in the response message.
Slave address 0 (00H, broadcast address) can identify all the slaves connected. However slaves do not respond.

Function code

The function code is the command code for the slave to undertake the following action types.

Function code	Contents
03 (03H)	Reading the set value and information from slaves
06 (06H)	Setting to slaves

Function code is used to discern whether the response is normal (acknowledgement) or if any error (negative acknowledgement) has occurred when the slave returns the response message to the master.
When acknowledgement is returned, the slave simply returns the original function code.
When negative acknowledgement is returned, the MSB of the original function code is set as 1 for the response.
For example, when the master sends request message setting 10H to the function code by mistake, slave returns 90H by setting the MSB to 1, because the former is an illegal function.
For negative acknowledgement, the exception codes below are set to the data of the response messages and returned to the master in order to inform it of what kind of error has occurred.

Exception code	Contents
1 (01H)	Illegal function (Non-existent function)
2 (02H)	Illegal data address (Non-existent data address)
3 (03H)	Illegal data value (Value out of the setting range)
17 (11H)	Shinko protocol error code 4 (Status which cannot be set, e.g. AT is performing)
18 (12H)	Shinko protocol error code 5 (During setting mode by keypad operation)

Data

Data differs depending on the function code.
A request message from the master side is composed of data item, number of data and setting data.
A response message from the slave side is composed of a number of byte, data and exception codes in negative acknowledgements.
The number of data to be dealt with in one message is “1”. Therefore the number of data is fixed as (0001H).
The number of response byte is (02H).
Effective range of data is –32768 to 32767 (8000H to 7FFFH).

Error check: 16 bit data to detect communication errors. Refer to “(2) Error check of RTU mode”. (p.10)

(2) Error check of RTU mode

After calculating CRC-16 (Cyclic Redundancy Check) from the slave address to the end of data, the calculated 16-bit data is appended to the end of message in sequence from low order to high order.

How to calculate CRC-16

In the CRC-16 system, the information is divided by the polynomial series. The remainder is added to the end of the information and transmitted. The generation of polynomial series is as follows.

(Generation of polynomial series: $X^{16} + X^{15} + X^{2} + 1$)

① Initialize the CRC-16 data (assumed as X) (FFFFH).
② Calculate exclusive OR (XOR) with the 1st data and X. This is assumed as X.
③ Shift X one bit to the right. This is assumed as X.
④ When a carry is generated as a result of the shift, XOR is calculated by X of ③ and the fixed value (A001H). This is assumed as X. If a carry is not generated, go to step ⑤.
⑤ Repeat steps ③ and ④ until shifting 8 times.
⑥ XOR is calculated with the next data and X. This is assumed as X.
⑦ Repeat steps ③ to ⑤.
⑧ Repeat steps ③ to ⑤ up to the last data.
⑨ Set X as CRC-16 to the end of message in sequence from low order to high order.

(3) Message example of RTU mode

Numerals written below the command represent number of characters.

① **Reading (Slave address 1, PV)**

• A request message from the master

The number of data means the data item to be read, and it is fixed as 1 (0001H).

3.5 idle characters	Slave address (01H)	Function code (03H)	Data item (0A00H)	Number of data (0001H)	Error check CRC-16 (87D2H)	3.5 idle characters
	1	1	2	2	2	

• Response message from the slave in normal status [When PV=600℃ (0258H)]

The number of response byte means the number of byte of the data which has been read, and it is fixed as 2 (02H).

3.5 idle characters	Slave address (01H)	Function code (03H)	Number of response byte (02H)	Data (0258H)	Error check CRC-16 (B8DEH)	3.5 idle characters
	1	1	1	2	2	

② **Reading (Slave address 1, SV)**

• A request message from the master

The number of data means the data item to be read, and it is fixed as 1 (0001H).

3.5 idle characters	Slave address (01H)	Function code (03H)	Data item (0001H)	Number of data (0001H)	Error check CRC-16 (D5CAH)	3.5 idle characters
	1	1	2	2	2	

• Response message from the slave in normal status [When SV=600℃ (0258H)]

The number of response byte means the number of byte of the data which has been read, and it is fixed as 2 (02H).

3.5 idle characters	Slave address (01H)	Function code (03H)	Number of response byte (02H)	Data (0258H)	Error check CRC-16 (B8DEH)	3.5 idle characters
	1	1	1	2	2	

• Response message from the slave in exception (error) status (When data item is mistaken)

The function code MSB is set to 1 for the response message in exception (error) status (83H).

The exception code (02H: Non-existent data address) is returned (error).

3.5 idle characters	Slave address (01H)	Function code (83H)	Exception code (02H)	Error check CRC-16 (C0F1H)	3.5 idle characters
	1	1	1	2	

③ **Setting (Slave address 1, SV)** [When setting SV to 600℃ (0258H)]

• A request message from the master

3.5 idle characters	Slave address (01H)	Function code (06H)	Data item (0001H)	Data (0258H)	Error check CRC-16 (D890H)	3.5 idle characters
	1	1	2	2	2	

• Response message from the slave in normal status

3.5 idle characters	Slave address (01H)	Function code (06H)	Data item (0001H)	Data (0258H)	Error check CRC-16 (D890H)	3.5 idle characters
	1	1	2	2	2	

• Response message from the slave in exception (error) status (When a value out of the setting range is set)
The function code MSB is set to 1 for the response message in exception (error) status (86H).
The exception code (03H: Value out of the setting range) is returned (error).

3.5 idle characters	Slave address (01H)	Function code (86H)	Exception code (03H)	Error check CRC-16 (0261H)	3.5 idle characters
	1	1	1	2	

7. Communication command table

● **Data**

Note on setting, reading command

• [13A] is entered in the data item for the exclusive commands of the ACD/R-13A.
[15A] is entered in the data item for the exclusive commands of the ACD/R-15A.
Nothing is entered in the data item for common commands to ACD/R-13A, ACD/R-15A.
Be sure to use exclusive commands correctly as described above, otherwise actions will not be guaranteed.
• The data (set value, decimal) is converted to hexadecimal figures. A negative number is represented by 2's complement.
• When connecting plural slaves, the address (instrument number) must not be duplicated.
• Do not use the unused data items such as 0000H, 000CH. If they are used, negative acknowledgement will be returned or communication errors may occur.
• Modbus protocol uses Holding Register address. For Holding Register address, data item of Shinko protocol is converted to decimal figures, and to which offset of 40001 is added.
(e.g.) In the case of “0001H: SV [Set value memory number 1 (SM1)]”, data item on the message to be sent is 0001H, however, Holding Register address of the Modbus protocol is 40002 (1+40001).

Setting command

• Setting range of each item is the same as that of keypad operation.
• When the data (set value) has a decimal point, a whole number (hexadecimal) without a decimal point is used.
• If the alarm type is changed during Event output EVT1 allocation (0060H) to Event output EVT5 allocation (0064H), the alarm value will revert to “0”. Also alarm output status will be initialized.
• It is possible to set the set value with the setting command of the communication function even when the set value is locked.
• Although the options are not applied, setting the items for the options is possible using the setting command. However, they will not function.
• The instrument numbers and communication speed of the slave cannot be set by communication function.
• When sending a command by Global address [95 (7FH)], the same command is sent to all the slaves connected. However, the response is not returned.
• The memory can store up to 1,000,000 (one million) entries.
If the number of settings exceeds the limit, the data will not be saved. So frequent transmission via communication is not recommended.

Reading command

• When the data (set value) has a decimal point, a whole number (hexadecimal) without a decimal point is used for a response.

● **Negative acknowledgement**

The slave will return Error code 1 (31H) (Shinko protocol) or Exception code 1 (01H) (Modbus protocol) in the following cases.

• If AT/Auto-reset (0010H) is selected while control is in PI action or in ON/OFF action.
• When Manual MV (00D3H) is read during automatic control.

The slave will return Error code 4 (34H) (Shinko protocol) or Exception code 17 (11H) (Modbus protocol) in the following cases.

• When SV setting (00D0H) of current Set value memory number is performed during AT or program control.
• When manual MV (00D3H) is set during automatic control.

Shinko Command type	Modbus Function code	Data item		Data
20H/50H	03H/06H	0001H	SV [Set value memory number 1(SM1)]	Set value, Decimal point ignored
20H/50H	03H/06H	0002H	EVT1 alarm value (SM1)	Set value, Decimal point ignored
20H/50H	03H/06H	0003H	EVT1 high limit alarm value (SM1)	Set value, Decimal point ignored
20H/50H	03H/06H	0004H	EVT2 alarm value (SM1) [13A]	Set value, Decimal point ignored
20H/50H	03H/06H	0005H	EVT2 high limit alarm value (SM1) [13A]	Set value, Decimal point ignored
20H/50H	03H/06H	0006H	EVT3 alarm value (SM1) [13A]	Set value, Decimal point ignored
20H/50H	03H/06H	0007H	EVT3 high limit alarm value (SM1) [13A]	Set value, Decimal point ignored
20H/50H	03H/06H	0008H	EVT4 alarm value (SM1)	Set value, Decimal point ignored
20H/50H	03H/06H	0009H	EVT4 high limit alarm value (SM1)	Set value, Decimal point ignored
20H/50H	03H/06H	000AH	EVT5 alarm value (SM1)	Set value, Decimal point ignored
20H/50H	03H/06H	000BH	EVT5 high limit alarm value (SM1)	Set value, Decimal point ignored
			Note: If Independent alarms such as High/Low limits independent, High/Low limit range independent and High/Low limits with standby independent is selected during EVT1 to EVT5 allocation (0060H to 0064H), the EVT1 to EVT5 alarm value (SM1) matches the low limit side, and EVT1 to EVT5 high limit alarm value (SM1) matches the high limit side. Set values of the Set value memory numbers (SM1 to SM15) are common to those of step numbers (1 to 15) of the Program control command. (Pages 19, 20) For Set value memory numbers (SM2 to SM15), use step numbers (2 to 15) of the Program control command.	
20H/50H	03H/06H	0010H	AT/Auto-reset	0000H: Cancel 0001H: Perform
20H/50H	03H/06H	0011H	AT bias	Set value
20H/50H	03H/06H	0020H	OUT1 proportional band (Zone 1) [13A] Proportional band (Zone 1) [15A]	Set value, Decimal point ignored
20H/50H	03H/06H	0021H	OUT2 proportional band (Zone 1) [13A]	Set value, Decimal point ignored
20H/50H	03H/06H	0022H	Integral time (Zone 1)	Set value
20H/50H	03H/06H	0023H	Derivative time (Zone 1)	Set value
20H/50H	03H/06H	0024H	ARW (Zone 1)	Set value
20H/50H	03H/06H	0025H	Manual reset (Zone 1)	Set value, Decimal point ignored
20H/50H	03H/06H	0026H	OUT1 rage-of-change (Zone 1) [13A] MV rage-of-change (Zone 1) [15A]	Set value
			Note: Set values from Zone 1 to Zone 5 are common to those of Zone 1 to Zone 5 of the PID zone command. (Pages 20, 21) For Zone 2 to Zone 5, use Zone 2 to Zone 5 of the PID zone command.	
20H/50H	03H/06H	0030H	Input type	0000H: K -200 to 1370℃ 0001H: K -200.0 to 400.0℃ 0002H: J -200 to 1000℃ 0003H: R 0 to 1760℃ 0004H: S 0 to 1760℃ 0005H: B 0 to 1820℃ 0006H: E -200 to 800℃ 0007H: T -200.0 to 400.0℃ 0008H: N -200 to 1300℃ 0009H: PL-Ⅱ 0 to 1390℃ 000AH: C(W/Re5-26) 0 to 2315℃ 000BH: Pt100 -200.0 to 850.0℃ 000CH: JPt100 -200.0 to 500.0℃ 000DH: Pt100 -200 to 850℃ 000EH: JPt100 -200 to 500℃

Shinko Command type	Modbus Function code	Data item		Data
				000FH: Pt100 -100.0 to 100.0℃ 0010H:JPt100 -100.0 to 500.0℃
				0011H: K -328 to 2498℉ 0012H: K -328.0 to 752.0℉ 0013H: J -328 to 1832℉ 0014H: R 32 to 3200℉ 0015H: S 32 to 3200℉ 0016H: B 32 to 3308℉ 0017H: E -328 to 1472℉ 0018H: T -328.0 to 752.0℉ 0019H: N -328 to 2372℉ 001AH: PL-Ⅱ 32 to 2534℉ 001BH: C(W/Re5-26) 32 to 4199℉ 001CH: Pt100 -328.0 to 1562.0℉ 001DH: JPt100 -328.0 to 932.0℉ 001EH: Pt100 -328 to 1562℉ 001FH: JPt100 -328 to 932℉ 0020H: Pt100 -148.0 to 212.0℉ 0021H: JPt100 -148.0 to 932.0℉
				0022H: 4 to 20mA DC -2000 to 10000 0023H: 0 to 20mA DC -2000 to 10000 0024H: 0 to 10mV DC -2000 to 10000 0025H: -10 to 10mV DC -2000 to 10000 0026H: 0 to 50mV DC -2000 to 10000 0027H: 0 to 100mV DC -2000 to 10000 0028H: 0 to 1V DC -2000 to 10000 0029H: 0 to 5V DC -2000 to 10000 002AH: 1 to 5V DC -2000 to 10000 002BH: 0 to 10V DC -2000 to 10000
			Note: When responding to the command of Input type selection, it takes approx. 2sec due to internal processing. Therefore set the Time-out time for communication to 2sec or more when executing this command.	
20H/50H	03H/06H	0031H	Scaling high limit	Set value, Decimal point ignored
20H/50H	03H/06H	0032H	Scaling low limit	Set value, Decimal point ignored
20H/50H	03H/06H	0033H	Decimal point place	0000H: xxxxx 0001H: xxxx.x 0002H: xxx.xx 0003H: xx.xxx 0004H: x.xxxx
20H/50H	03H/06H	0034H	PV filter time constant	Set value, Decimal point ignored
20H/50H	03H/06H	0035H	Sensor correction	Set value, Decimal point ignored
20H/50H	03H/06H	0040H	OUT1 proportional cycle [13A]	Set value
20H/50H	03H/06H	0041H	OUT2 proportional cycle [13A]	Set value
20H/50H	03H/06H	0042H	OUT1 high limit [13A] MV high limit [15A]	Set value
20H/50H	03H/06H	0043H	OUT1 low limit [13A] MV low limit [15A]	Set value
20H/50H	03H/06H	0044H	OUT1 ON/OFF action hysteresis [13A] ON/OFF action hysteresis [15A]	Set value, Decimal point ignored

Shinko Command type	Modbus Function code	Data item		Data
20H/50H	03H/06H	0045H	OUT2 action mode [13A]	0000H: Air cooling 0001H: Oil cooling 0002H: Water cooling
20H/50H	03H/06H	0046H	OUT2 high limit [13A]	Set value
20H/50H	03H/06H	0047H	OUT2 low limit [13A]	Set value
20H/50H	03H/06H	0048H	Overlap/Dead band [13A]	Set value, Decimal point ignored
20H/50H	03H/06H	0049H	OUT2 ON/OFF action hysteresis [13A]	Set value, Decimal point ignored
20H/50H	03H/06H	004AH	Direct/Reverse action	0000H: Reverse action 0001H: Direct action
20H/50H	03H/06H	004BH	OUT1 preset output [13A]	Set value, Decimal point ignored
20H/50H	03H/06H	004CH	OUT2 preset output [13A]	Set value, Decimal point ignored
20H/50H	03H/06H	0050H	Event input EVI1 allocation	0000H: No event 0001H: Set value memory 0002H: Control ON/OFF 0003H: Direct/Reverse control action 0004H: Timer Start/Stop 0005H: PV display; PV holding 0006H: PV display; PV peak value holding 0007H: Preset output 0008H: Auto/Manual control 0009H: Remote/Local 000AH: Program mode; RUN/STOP 000BH: Program mode; Holding/Not holding 000CH: Program mode; Advance function 000DH: Integral action holding
20H/50H	03H/06H	0051H	Event input EVI2 allocation	The same as those of the Event input EVI1 allocation
20H/50H	03H/06H	0052H	Event input EVI3 allocation	The same as those of the Event input EVI1 allocation
20H/50H	03H/06H	0053H	Event input EVI4 allocation	The same as those of the Event input EVI1 allocation

Shinko Command type	Modbus Function code	Data item		Data
20H/50H	03H/06H	0060H	Event output EVT1 allocation	0000H: No event 0001H: High limit alarm 0002H: Low limit alarm 0003H: High/Low limits alarm 0004H: H/L limits independent 0005H: H/L limit range alarm 0006H: H/L limit range independent 0007H: Process high alarm 0008H: Process low alarm 0009H: High limit with standby 000AH: Low limit with standby 000BH: H/L limits with standby 000CH: H/L limits with standby independent 000DH: Timer output Interlocked with Event input 000EH: Timer output Interlocked with Event input. Control ON during timer operation. Control OFF after time is up. 000FH: Heater burnout alarm output 0010H: Loop break alarm output 0011H: Time signal output 0012H: Output during AT 0013H: Pattern end output
20H/50H	03H/06H	0061H	Event output EVT2 allocation [13A]	The same as those of the Event output EVT1 allocation
20H/50H	03H/06H	0062H	Event output EVT3 allocation [13A]	The same as those of the Event output EVT1 allocation
20H/50H	03H/06H	0063H	Event output EVT4 allocation	The same as those of the Event output EVT1 allocation
20H/50H	03H/06H	0064H	Event output EVT5 allocation	The same as those of the Event output EVT1 allocation
20H/50H	03H/06H	0065H	EVT1 Alarm hysteresis	Set value, Decimal point ignored
20H/50H	03H/06H	0066H	EVT1 Alarm action delayed timer	Set value
20H/50H	03H/06H	0067H	EVT1 Alarm Energized/De-energized	0000H: Energized 0001H: De-energized
20H/50H	03H/06H	0068H	EVT2 Alarm hysteresis [13A]	Set value, Decimal point ignored
20H/50H	03H/06H	0069H	EVT2 Alarm action delayed timer [13A]	Set value
20H/50H	03H/06H	006AH	EVT2 Alarm Energized/De-energized [13A]	0000H: Energized 0001H: De-energized
20H/50H	03H/06H	006BH	EVT3 Alarm hysteresis [13A]	Set value, Decimal point ignored
20H/50H	03H/06H	006CH	EVT3 Alarm action delayed timer [13A]	Set value
20H/50H	03H/06H	006DH	EVT3 Alarm Energized/De-energized [13A]	0000H: Energized 0001H: De-energized
20H/50H	03H/06H	006EH	EVT4 Alarm hysteresis	Set value, Decimal point ignored
20H/50H	03H/06H	006FH	EVT4 Alarm action delayed timer	Set value
20H/50H	03H/06H	0070H	EVT4 Alarm Energized/De-energized	0000H: Energized 0001H: De-energized
20H/50H	03H/06H	0071H	EVT5 Alarm hysteresis	Set value, Decimal point ignored
20H/50H	03H/06H	0072H	EVT5 Alarm action delayed timer	Set value

Shinko Command type	Modbus Function code	Data item		Data
20H/50H	03H/06H	0073H	EVT5 Alarm Energized/De-energized	0000H: Energized 0001H: De-energized
20H/50H	03H/06H	0074H	Timer output delay action	0000H: ON delay timer 0001H: OFF delay timer 0002H: ON/OFF delay timer
20H/50H	03H/06H	0075H	Timer output time unit	0000H: Minute 0001H: Second
20H/50H	03H/06H	0076H	OFF delay timer time	Set value
20H/50H	03H/06H	0077H	ON delay timer time	Set value
20H/50H	03H/06H	0078H	Heater rated current [13A]	0000H: 20A 0001H: 100A
20H/50H	03H/06H	0079H	Heater burnout alarm 1 [13A]	Set value, Decimal point ignored
20H/50H	03H/06H	007AH	Heater burnout alarm 2 [13A]	Set value, Decimal point ignored
20H/50H	03H/06H	007BH	Loop break alarm time	Set value
20H/50H	03H/06H	007CH	Loop break alarm span	Set value, Decimal point ignored
20H/50H	03H/06H	007DH	Time signal output step	Set value
20H/50H	03H/06H	007EH	Time signal output OFF time	Set value
20H/50H	03H/06H	007FH	Time signal output ON time	Set value
			Note: For Time Signal output OFF/ON time setting, the smaller unit value of Step time unit (0091H) is calculated, and is converted to hexadecimal figures. 00:00 to 99:59 (0 to 5999) (e.g) When time unit is set to “Hour:Minute”: 1 hour 30 minutes→ 90 minutes→ 005AH 15 hours 50 minutes→ 950 minutes→ 03B6H	
20H/50H	03H/06H	0090H	Fixed value control/Program control	0000H: Fixed value control 0001H: Program control
20H/50H	03H/06H	0091H	Step time unit	0000H: Hour:Minute 0001H: Minute:Second
20H/50H	03H/06H	0092H	Power restore action	0000H: Stops (Standby) after power restoration 0001H: Continues after power restoration 0002H: Suspended (On hold) after power restoration
20H/50H	03H/06H	0093H	Program start temperature	Set value, Decimal point ignored
20H/50H	03H/06H	00A0H	Remote/Local	0000H: Local 0001H: Remote
20H/50H	03H/06H	00A1H	External setting input high limit	Set value, Decimal point ignored
20H/50H	03H/06H	00A2H	External setting input low limit	Set value, Decimal point ignored
20H/50H	03H/06H	00A3H	Remote bias	Set value, Decimal point ignored
20H/50H	03H/06H	00B0H	Transmission output	0000H: PV transmission 0001H: SV transmission 0002H: MV transmission 0003H: DV transmission
20H/50H	03H/06H	00B1H	Transmission output high limit	Set value, Decimal point ignored
20H/50H	03H/06H	00B2H	Transmission output low limit	Set value, Decimal point ignored

Shinko Command type	Modbus Function code	Data item		Data
20H/50H	03H/06H	00C0H	Set value lock	0000H: Unlock 0001H: Lock 1 0002H: Lock 2 0003H: Lock 3 0004H: Lock 4
20H/50H	03H/06H	00C1H	PID zone function	0000H: Not used 0001H: Used
20H/50H	03H/06H	00C2H	SV rise rate	Set value, Decimal point ignored
20H/50H	03H/06H	00C3H	SV fall rate	Set value, Decimal point ignored
20H/50H	03H/06H	00C4H	Indication when output OFF	0000H: OFF indication 0001H: No indication 0002H: PV indication 0003H: PV indication + Any event from EVT1 to EVT5 output effective
20H/50H	03H/06H	00C5H	Backlight	0000H: All are backlit 0001H: Only PV display is backlit 0002H: Only SV display is backlit 0003H: Only Action indicators are backlit 0004H: PV+SV displays are backlit 0005H: PV+ Action indicators are backlit 0006H: SV+ Action indicators are backlit
20H/50H	03H/06H	00C6H	PV color	0000H: Green 0001H: Red 0002H: Orange 0003H: EVT1 to EVT5 ON: Green→Red 0004H: EVT1 to EVT5 ON: Orange→Red 0005H: PV continuous change 0006H: PV continuous change + EVT1 to EVT5 ON: Red
20H/50H	03H/06H	00C7H	PV color range	Set value, Decimal point ignored.
20H/50H	03H/06H	00C8H	Backlight time	Set value
20H/50H	03H/06H	00C9H	Bar graph	0000H: MV indication 0001H: DV indication
20H/50H	03H/06H	00CAH	Deviation unit	Set value, Decimal point ignored.
20H/50H	03H/06H	00D0H	SV of Current Set value memory number	Set value, Decimal point ignored.
20H/50H	03H/06H	00D1H	PV/SV display mode (Stop)/ Standby mode (Run)	0000H: PV/SV display mode (Stop) 0001H: Standby mode (Run)
20H/50H	03H/06H	00D2H	Auto/Manual control	0000H: Automatic control 0001H: Manual control
20H/50H	03H/06H	00D3H	Manual MV	Set value
20H/50H	03H/06H	00D4H	Key (setting operation) Allowed/Prohibited	0000H: Allowed 0001H: Prohibited
			Note: If power to the controller is turned ON again after the key has been set to “Prohibited”, the key will be set to “allowed”.	

Shinko Command type	Modbus Function code	Data item		Data
20H/50H	03H/06H	00E0H	FBP Yes/No [15A]	0000H: Yes 0001H: No
20H/50H	03H/06H	00E1H	Open/Closed output Dead band [15A]	Set value
20H/50H	03H/06H	00E2H	Open/Closed output Hysteresis [15A]	Set value
20H/50H	03H/06H	00E3H	Open output time [15A]	Set value
20H/50H	03H/06H	00E4H	Closed output time [15A]	Set value
50H	06H	00F0H	Key operation change flag clearing	0000H: No action 0001H: All clearing
20H	03H	0A00H	PV (process variable)	Decimal point ignored
20H	03H	0A01H	OUT1 MV [13A] Output MV [15A]	Decimal point ignored
20H	03H	0A02H	OUT2 MV [13A]	Decimal point ignored
20H	03H	0A03H	Current SV	Decimal point ignored
20H	03H	0A04H	Remaining time when program runs	Remaining time
20H	03H	0A05H	Program running step	Running step (SM) number
20H	03H	0A06H	Status flag 1	

0000 0000 0000 0000

- 2^0: OUT1 0: OFF, 1: ON [13A]
  (DC current output type: Not fixed)
  Open output 0: OFF, 1: ON [15A]
- 2^1: OUT2 0: OFF, 1: ON [13A]
  (DC current output type: Not fixed)
  Closed output 0: OFF, 1: ON [15A]
- 2^2: EVT1 output 0: OFF, 1: ON
- 2^3: EVT2 output 0: OFF, 1: ON [13A]
  Not used, Always 0 [15A]
- 2^4: EVT3 output 0: OFF, 1: ON [13A]
  Not used, Always 0 [15A]
- 2^5: EVT4 output 0: OFF, 1: ON
- 2^6: EVT5 output 0: OFF, 1: ON
- 2^7: Heater burnout alarm output 0: OFF, 1: ON [13A]
  (When sensor burnout, 0: OFF)
  Not used, Always 0 [15A]
- 2^8: Loop break alarm output 0: OFF, 1: ON
- 2^9: Overscale 0: OFF, 1: ON
- 2^{10}: Underscale 0: OFF, 1: ON
- 2^{11}: PV/SV display mode/Standby mode
  0: PV/SV display mode, 1: Standby mode
- 2^{12}: PV/SV display mode/Setting mode
  0: PV/SV display mode, 1: Setting mode
- 2^{13}: AT/Auto-reset
  0: OFF, 1: During AT/Auto-reset
- 2^{14}: Warm-up
  0: Finished, 1: During warm-up
- 2^{15}: Change in key operation
  0: No, 1: Yes

Shinko Command type	Modbus Function code	Data item		Data
20H	03H	0A07H	Status flag 2	
			0000 0000 0000 0000 2^0: EVT1 input 0: OFF, 1: ON 2^1: EVT2 input 0: OFF, 1: ON 2^2: EVT3 input 0: OFF, 1: ON 2^3: EVT4 input 0: OFF, 1: ON 2^4: Not used, Always 0 2^5: Not used, Always 0 2^6: Not used, Always 0 2^7: Not used, Always 0 2^8: Not used, Always 0 2^9: Not used, Always 0 2^{10}: Not used, Always 0 2^{11}: Auto/Manual control 0: Automatic control, 1: Manual control 2^{12}: Control mode 0: Fixed value control, 1: Program control 2^{13}: Program control 0: Standby, 1: Program control run 2^{14}: Wait function 0: OFF, 1: During Wait 2^{15}: Not used, Always 0	
20H	03H	0A08H	CT1 current value [13A]	Decimal point ignored
20H	03H	0A09H	CT2 current value [13A]	Decimal point ignored

Program control command

Shinko Command type	Modbus Function code	Data item		Data
20H/50H	03H/06H	1110H	Step 1 SV	Set value, Decimal point ignored.
20H/50H	03H/06H	1111H	Step 1 time	Set value
			Note: For Step time setting, the smaller unit value of Step time unit (0091H) is calculated, and is converted to hexadecimal figures. 00:00 to 99:59 (0 to 5999) (e.g) When time unit is set to “Hour:Minute”: 1 hour 30 minutes→ 90 minutes→ 005AH 15 hours 50 minutes→ 950 minutes→ 03B6H	
20H/50H	03H/06H	1112H	Step 1 wait value	Set value, Decimal point ignored.
20H/50H	03H/06H	1113H	Step 1 EVT1 alarm value	Set value, Decimal point ignored.
20H/50H	03H/06H	1114H	Step 1 EVT1 high limit alarm value	Set value, Decimal point ignored.
20H/50H	03H/06H	1115H	Step 1 EVT2 alarm value [13A]	Set value, Decimal point ignored.
20H/50H	03H/06H	1116H	Step 1 EVT2 high limit alarm value [13A]	Set value, Decimal point ignored.
20H/50H	03H/06H	1117H	Step 1 EVT3 alarm value [13A]	Set value, Decimal point ignored.
20H/50H	03H/06H	1118H	Step 1 EVT3 high limit alarm value [13A]	Set value, Decimal point ignored.
20H/50H	03H/06H	1119H	Step 1 EVT4 alarm value	Set value, Decimal point ignored.
20H/50H	03H/06H	111AH	Step 1 EVT4 high limit alarm value	Set value, Decimal point ignored.
20H/50H	03H/06H	111BH	Step 1 EVT5 alarm value	Set value, Decimal point ignored.
20H/50H	03H/06H	111CH	Step 1 EVT5 high limit alarm value	Set value, Decimal point ignored.

Shinko Command type	Modbus Function code	Data item		Data
			Note: If Independent alarms such as High/Low limits independent, High/Low limit range independent and High/Low limits with standby independent is selected during EVT1 to EVT5 allocation (0060H to 0064H), Step 1 EVT1 to EVT5 alarm value matches the low limit side, and Step 1 EVT1 to EVT5 high limit alarm value matches the high limit side.	
			One step data includes from Step 1 SV to Step 1 EVT5 high limit alarm value. It is possible to set up to Step 15.	
20H/50H	03H/06H	11F0H	Step 15 SV	Set value, Decimal point ignored.
20H/50H	03H/06H	11F1H	Step 15 time	Set value
20H/50H	03H/06H	11F2H	Step 15 wait value	Set value, Decimal point ignored.
20H/50H	03H/06H	11F3H	Step 15 EVT1 alarm value	Set value, Decimal point ignored
20H/50H	03H/06H	11F4H	Step 15 EVT1 high limit alarm value	Set value, Decimal point ignored
20H/50H	03H/06H	11F5H	Step 15 EVT2 alarm value [13A]	Set value, Decimal point ignored
20H/50H	03H/06H	11F6H	Step 15 EVT2 high limit alarm value [13A]	Set value, Decimal point ignored
20H/50H	03H/06H	11F7H	Step 15 EVT3 alarm value [13A]	Set value, Decimal point ignored.
20H/50H	03H/06H	11F8H	Step 15 EVT3 high limit alarm value [13A]	Set value, Decimal point ignored
20H/50H	03H/06H	11F9H	Step 15 EVT4 alarm value	Set value, Decimal point ignored
20H/50H	03H/06H	11FAH	Step 15 EVT4 high limit alarm value	Set value, Decimal point ignored
20H/50H	03H/06H	11FBH	Step 15 EVT5 alarm value	Set value, Decimal point ignored
20H/50H	03H/06H	11FCH	Step 15 EVT5 high limit alarm value	Set value, Decimal point ignored

Data item:

16^3 digit 0: Fixed value control, 1: Program control
16^2 digit Pattern number (1, fixed) for Program control
16^1 digit Step number [1 to 15(FH)] for Program control
16^0 digit One step data item code for Program control

Set values (from Step 2 to Step 15) of the Program control command are common to those of the Set value memory number (from SM2 to SM15). (P.12)

PID zone command

Shinko Command type	Modbus Function code	Data item		Data
20H/50H	03H/06H	2010H	PID zone value 1 (Zone 1)	Set value, Decimal point ignored.
20H/50H	03H/06H	2011H	OUT1 proportional band (Zone 1) [13A] Proportional band (Zone 1) [15A]	Set value, Decimal point ignored.
20H/50H	03H/06H	2012H	OUT2 proportional band (Zone 1) [13A]	Set value, Decimal point ignored.
20H/50H	03H/06H	2013H	Integral time (Zone 1)	Set value
20H/50H	03H/06H	2014H	Derivative time (Zone 1)	Set value
20H/50H	03H/06H	2015H	ARW (Zone 1)	Set value
20H/50H	03H/06H	2016H	Manual reset (Zone 1)	Set value, Decimal point ignored.
20H/50H	03H/06H	2017H	OUT1 rate-of-change (Zone 1) [13A] MV rate-of change (Zone 1) [15A]	Set value
			If “0001H: Used” is selected during PID zone function selection (00C1H), it is possible to set up to 5 zones [One block data includes from PID zone value 1 (Zone 1) to OUT1 rate-of-change (Zone 1) [13A] / MV rate-of-change (Zone 1) [15A].	
20H/50H	03H/06H	2050H	PID zone value 5 (Zone 5)	Set value, Decimal point ignored.
20H/50H	03H/06H	2051H	OUT1 proportional band (Zone 5) [13A] Proportional band (Zone 5) [15A]	Set value, Decimal point ignored.
20H/50H	03H/06H	2052H	OUT2 proportional band (Zone 5) [13A]	Set value, Decimal point ignored.
20H/50H	03H/06H	2053H	Integral time (Zone 5)	Set value
20H/50H	03H/06H	2054H	Derivative time (Zone 5)	Set value

20H/50H	03H/06H	2055H	ARW (Zone 5)	Set value
20H/50H	03H/06H	2056H	Manual reset (Zone 5)	Set value, Decimal point ignored.
20H/50H	03H/06H	2057H	OUT1 rate-of-change (Zone 5) [13A] MV rate-of-change (Zone 5) [15A]	Set value

Data item:

16^3 digit 0: Fixed value control, 2: PID zone
16^2 digit Not used (0, fixed)
16^1 digit PID zone number (1 to 5)
16^0 digit One zone data item code

Set values (from Zone 1 to Zone 5) of the PID zone command are common to set values from Zone 1 to Zone 5. (p.12)

● **Notes on programming monitoring software**

How to speed up the scan time

When monitoring plural units of the controller, set the program so that requisite minimum pieces of data such as PV (0A00H), OUT1 MV [13A] / Output MV[15A] (0A01H), Status flag 1 (0A06H), etc. can be read.
For other data, set the program so that they can be read only when their set value has changed.
This will speed up the scan time.

How to read the set value change by the front keypad operation

If any set value is changed by the keypad operation, the controller sets the [Status flag 1 (0A06H) 2^{15}: Change in key operation] to [Yes (1)].
There are 2 methods of reading the set value change by the front keypad as follows.

Reading method 1

(1) On the software side, check that [Status flag 1 (0A06H) 2^{15}: Change in key operation] has been set to [Yes (1)], then read all set values.
(2) Clear the [Status flag 1 (0A06H) 2^{15}: Change in key operation], by setting the [Key operation change flag clearing (00F0H)] to [All clearing (0001H)].
If [Key operation change flag clearing (00F0H)] is set to [All clearing (0001H)] during the setting mode of the controller, Error code 5 (35H, Shinko protocol) or Exception Code 18 (12H, Modbus protocol) will be returned as a negative acknowledgement. And [Status flag 1 (0A06H) 2^{15}: Change in key operation] cannot be cleared. Set a program so that all set values can be read until acknowledgement is returned.

Reading method 2

(1) On the software side, check that [Status flag 1 (0A06H) 2^{15}: Change in key operation] has been set to [Yes (1)], then set the [Key operation change flag clearing (00F0H)] to [All clearing (0001H)].
(2) Set the program depending on the acknowledgement or negative acknowledgement as follows.
When acknowledgement is returned;
Consider it as settings completed, and read all set values.
When Error code 5 (35H, Shinko protocol) or Exception code 18 (12H, Modbus protocol) is returned as a negative acknowledgement;
Consider it as during setting mode, and read the requisite minimum pieces of data such as PV (0A00H), OUT1 MV [13A] / Output MV [15A] (0A01H), Status flag 1 (0A06H), etc. then return to step (1).

Thus, programs which do not affect the scan time can be created using the methods described above, even if set values on the monitoring software will not be updated until settings are complete.

How to read PID parameters after AT finishes

The controller sets [Status flag 1 (0A06H) 2^{13}: AT/Auto-reset] to [During AT/Auto-reset (1)] while AT is performing. After AT is finished, PID parameters are updated.
On the software side, read the parameters such as P, I, D, ARW after checking that [Status flag 1 (0A06H) 2^{13}: AT/Auto-reset] has been set to [OFF (0)].

Note when sending all set values at one time

- When changing alarm types during Event output EVT1 allocation (0060H) to Event output EVT5 allocation (0064H), alarm value will revert to “0”. First, send the selected alarm type, then send the alarm value.
- When changing input types during Input type selection (0030H), set values such as SV, OUT1 proportional band [13A] / Proportional band [15A], Alarm 1 value, etc. will be initialized.

  First, send the selected input type (0030H), then send other set values.
  When responding to the command of Input type selection, it takes approx. 2sec due to internal processing.
  Therefore set the Time-out time for communication to 2sec or more when executing this command.

● **When communicating with a PLC**

Command example (Shinko protocol) when communicating with a Mitsubishi PLC (FX series)

• Reading (Top D register: D100)

Address 1, PV reading

Sending Data	(STX)(!)( )( )(0)(A)(0)(0)(F)(D)(ETX)		
Command		Register	Code
Header (STX)	02H	D100(LSB)	02H
Address	1	D100(MSB)	21H
Sub address	20H	D101(LSB)	20H
Command type	20H	D101(MSB)	20H
Data item	&HA00	D102(LSB)	30H
		D102(MSB)	41H
		D103(LSB)	30H
		D103(MSB)	30H
Checksum		D104(LSB)	46H
		D104(MSB)	44H
Delimiter (ETX)	03H	D105(LSB)	03H

Communication setting [MOVP H0C86 D8120]

Reading [RS D100 K11 D106 K26]

1 [MOV H2102 D100]
2 [MOV H2020 D101]
3 [MOV H4130 D102]
4 [MOV H3030 D103]
5 [MOV H4446 D104]
6 [MOV H03 D105]

• Setting (Top D register: D120)

Address 1, SV setting [When setting SV to 600℃ (0258H)]

Sending Data	(STX)(!)( )(P)(0)(0)(0)(1)(0)(2)(5)(8)(D)(F)(ETX)		
Command		Register	Code
Header (STX)	02H	D120(LSB)	02H
Address	1	D120(MSB)	21H
Sub address	20H	D121(LSB)	20H
Command type	P	D121(MSB)	50H
Data item	&H1	D122(LSB)	30H
		D122(MSB)	30H
		D123(LSB)	30H
		D123(MSB)	31H
Data item	600	D124(LSB)	30H
		D124(MSB)	32H
		D125(LSB)	35H
		D125(MSB)	38H
Checksum		D126(LSB)	44H
		D126(MSB)	46H
Delimiter (ETX)	03H	D127(LSB)	03H

Setting [RS D120 K15 D128 K22]

1 [MOV H2102 D120]
2 [MOV H5020 D121]
3 [MOV H3030 D122]
4 [MOV H3130 D123]
5 [MOV H3230 D124]
6 [MOV H3835 D125]
7 [MOV H4644 D126]
8 [MOV H03 D127]

8. Set value digital transmission

By connecting to Shinko programmable controllers [PC-900 and PCD-33A with the SVTC (Set value digital transmission) option], digital set values via the SVTC command can be received from the programmable controllers.

8.1 Wiring

RS-232C (only PC-900):

Connect TX (PC-900) with RX (ACD/R-13A, ACD/R-15A), RX (PC-900) with TX (ACD/R-13A, ACD/R-15A) and SG with SG terminal.

The following shows connection example between the PC-900 and ACD/R-13A, ACD/R-15A.

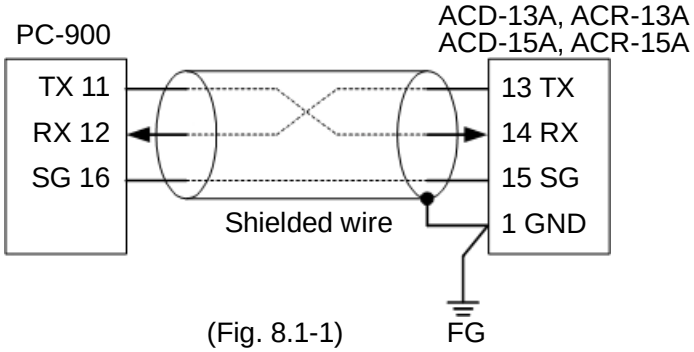

(Fig. 8.1-1)

RS-485:

For the PC-900, connect YA(-) with YA(-), YB(+) with YB(+), SG with SG terminal respectively.

For the PCD-33A, connect YA(-) with YA(-), YB(+) with YB(+), COM with COM terminal respectively.

Up to 31 units of the ACD/R-13A or ACD/R-15A can be connected.

The following shows connection example of PCD-33A and ACD/R-13A, ACD/R-15A.

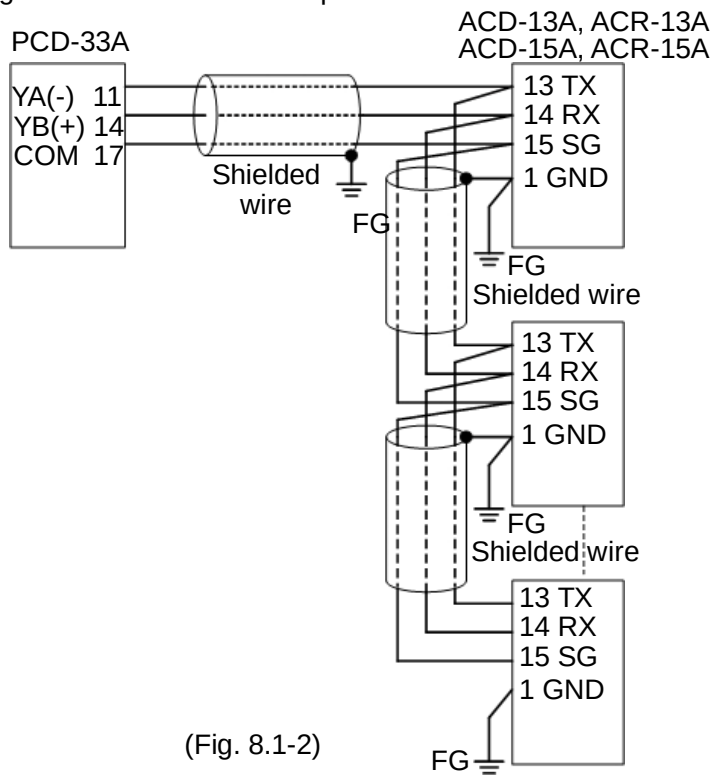

(Fig. 8.1-2)

8.2 Setting method of the programmable controller (PC-900, PCD-33A) and ACD/R-13A, ACD/R-15A

(1) Setting the PC-900 or PCD-33A

If SVTC option is added, none of the settings are required.

PC-900: Check that Set value digital transmission (SVTC) is selected during Communication mode selection [cmd].

PCD-33A: Check that Set value digital transmission (SVTC) is selected during Communication protocol selection (cmdL) in Auxiliary function setting mode 1.

(2) Setting the ACD/R-13A, ACD/R-15A

Check the following items in the Communication group. (Refer to “3. Communication parameter setting”.)

(a) Shinko protocol has been selected during Communication protocol selection.

(b) Communication speed of the ACD/R-13A or ACD/R-15A is equal to that of the PC-900 or PCD-33A (9600bps or 19200bps).

(3) Starting Set value digital transmission

Input the program set values to the PC-900 or PCD-33A.

If the program is executed by pressing the RUN key, set values of the PC-900 or PCD-33A will be sent to the ACD/R-13A, ACD/R-15A.

During program standby, “0” will be sent to the ACD/R-13A, ACD/R-15A.

9. Specifications

Cable length : RS-232C: 10m(Max.), RS-485: 1.2km(Max.)
Cable resistance: Within 50Ω (Terminator is not necessary or 120Ω or more on one side.)
Communication interface: EIA RS-232C, EIA RS-485
Communication method : Half-duplex communication
Communication speed : 9600/19200/38400bps (Selectable by keypad) (Default: 9600bps)
Synchronization : Start-stop synchronization
Code form : ASCII, binary
Data bit/Parity : 7, 8/Even, Odd, No parity (Selectable by keypad) (Default: 7/Even parity)
Stop bit : 1, 2 (Selectable by keypad) (Default: 1)
Communication protocol: Shinko protocol/ Modbus ASCII/ Modbus RTU (Selectable by keypad) (Default: Shinko protocol)
Data format

Communication protocol	Shinko protocol	Modbus ASCII	Modbus RTU
Start bit	1		1
Data bit	7 or 8		8
Parity	Yes (Even, Odd), No parity		Yes (Even, Odd), No parity
Stop bit	1 or 2		1 or 2

Number of connectable units : RS-232C: 1 unit, RS-485: Max 31 units to 1 host computer
Error correction : Command request repeat system
Communication error detection: Parity, checksum(Shinko protocol), LRC(Modbus ASCII), CRC-16(Modbus RTU)
Digital external setting : Receives digital set values via the SVTC command from Shinko programmable controllers (PC-900, PCD-33A with the SVTC option)

10. Troubleshooting

If any malfunctions occur, refer to the following items after checking the power supply to the master and the slave.

• **Problem: Communication failure**

Check the following
Make sure that the communication connector is securely connected.
Check that wiring of the communication connector is correct. Refer to “2. Wiring”.
Burnout or imperfect contact on the communication cable and the connector.
Communication speed of the slave does not coincide with that of the master. Refer to “3. Communication parameter setting”.
The data bit, parity and stop bit of the master do not accord with those of the slave. Refer to “3. Communication parameter setting”.
The instrument number (address) of the slave does not coincide with that of the command. Refer to “3. Communication parameter setting”.
The instrument numbers (addresses) are duplicated in multiple slaves. Refer to “3. Communication parameter setting”.
Make sure that the program is appropriate for the transmission timing. Refer to “4. Communication procedure”.

• **Problem: Although communication is occurring, the response is 'NAK'.**

Check the following
Check that a non-existent command code has not been sent.
The setting command data exceeds the setting range of the slave.
The controller cannot be set when functions such as AT are performing.
The ACD/R-13A or ACD/R-15A is in the front keypad operation setting mode.

For all other malfunctions, please contact our main office or dealers.

SHINKO TECHNOS CO., LTD.
OVERSEAS DIVISION

Reg. Office: 2-5-1, Senbahigashi, Minoo, Osaka, Japan
URL : http://www.shinko-technos.co.jp
E-mail : overseas@shinko-technos.co.jp
Tel : 81-72-727-6100
Fax: 81-72-727-7006