FRTxxxP SERIES

Split core current transformer

FRTxxxP Series

General Characteristics

- Current Transformers in low voltage
- Split core
- Easy mounting with screw.
- Wide inner window, allowing large clamping cables or busbars.
- Encapsulated in VO self-extinguishing plastic

Standard

- IEC 60044-1
- EN 60831-1
- EN 61869-2

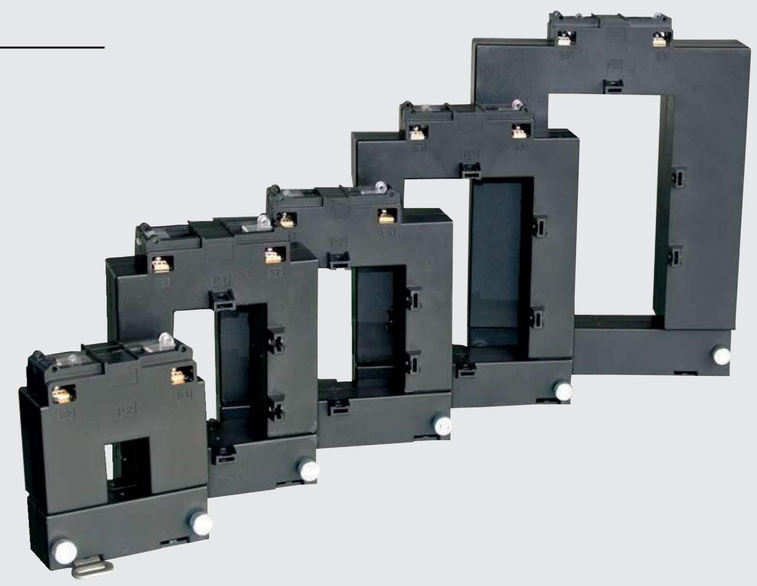

Technical Characteristics

Primary Nominal Current	5-5000 A
Secondary Nominal Current	x/5 A, x/1 A
Frequency	50/60 Hz
Over voltage (Un)	0,72 kV AC
Over current (Id)	1.2xIn
Security factor	5
Working temperature	-10˚ C +50˚ C
Precission class	0.5, 1

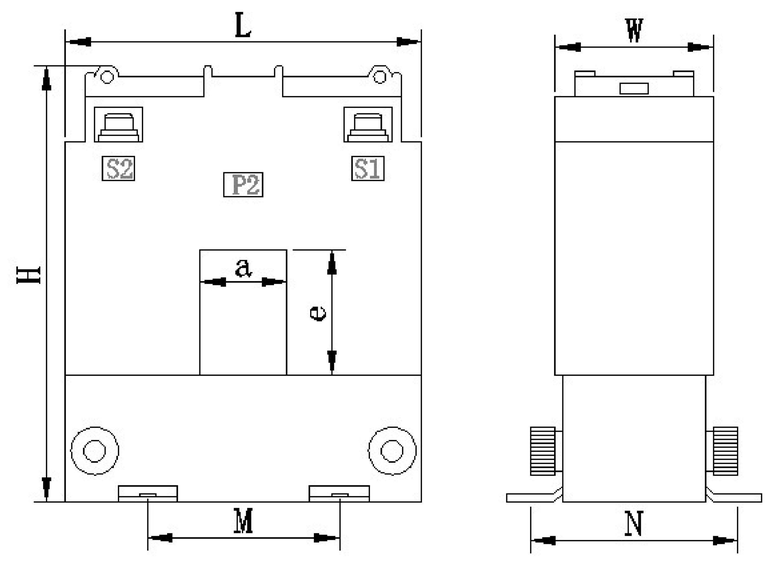

Series	L	W	H	a	e	M	N
	mm	mm	mm	mm	mm	mm	mm
FRT30P	90	40	110	20	30	49	52
FRT80P	145	37	159	80	80	111	45
FRT125P	145	37	200	80	120	111	45
FRT160P	185	53	248	80	160	118	45

RT30P

Code	Current	Class
	A	
FT010030P	100	1
FT015030P	150	1
FT020030P	200	0,5
FT025030P	250	0,5
FT030030P	300	0,5
FT040030P	400	0,5

RT80P

Code	Current	Class
	A	
FT025080P	250	1
FT030080P	300	1
FT040080P	400	0,5
FT050080P	500	0,5
FT060080P	600	0,5
FT075080P	750	0,5
FT080080P	800	0,5
FT100080P	1000	0,5

RT125P

Code	Current	Class
	A	
FT050125P	500	0,5
FT060125P	600	0,5
FT075125P	750	0,5
FT080125P	800	0,5
FT100125P	1000	0,5
FT120125P	1200	0,5
FT150125P	1500	0,5

RT160P

Code	Current	Class
	A	
FT100160P	1000	0,5
FT120160P	1200	0,5
FT150160P	1500	0,5
FT200160P	2000	0,5
FT250160P	2500	0,5
FT300160P	3000	0,5
FT400160P	4000	0,5
FT500160P	5000	0,5