REV	DESCRIPTION	DATE
1	RDK-97127	謝琬如 2009/09/18
2	RDK-98020	謝琬如 2009/09/18

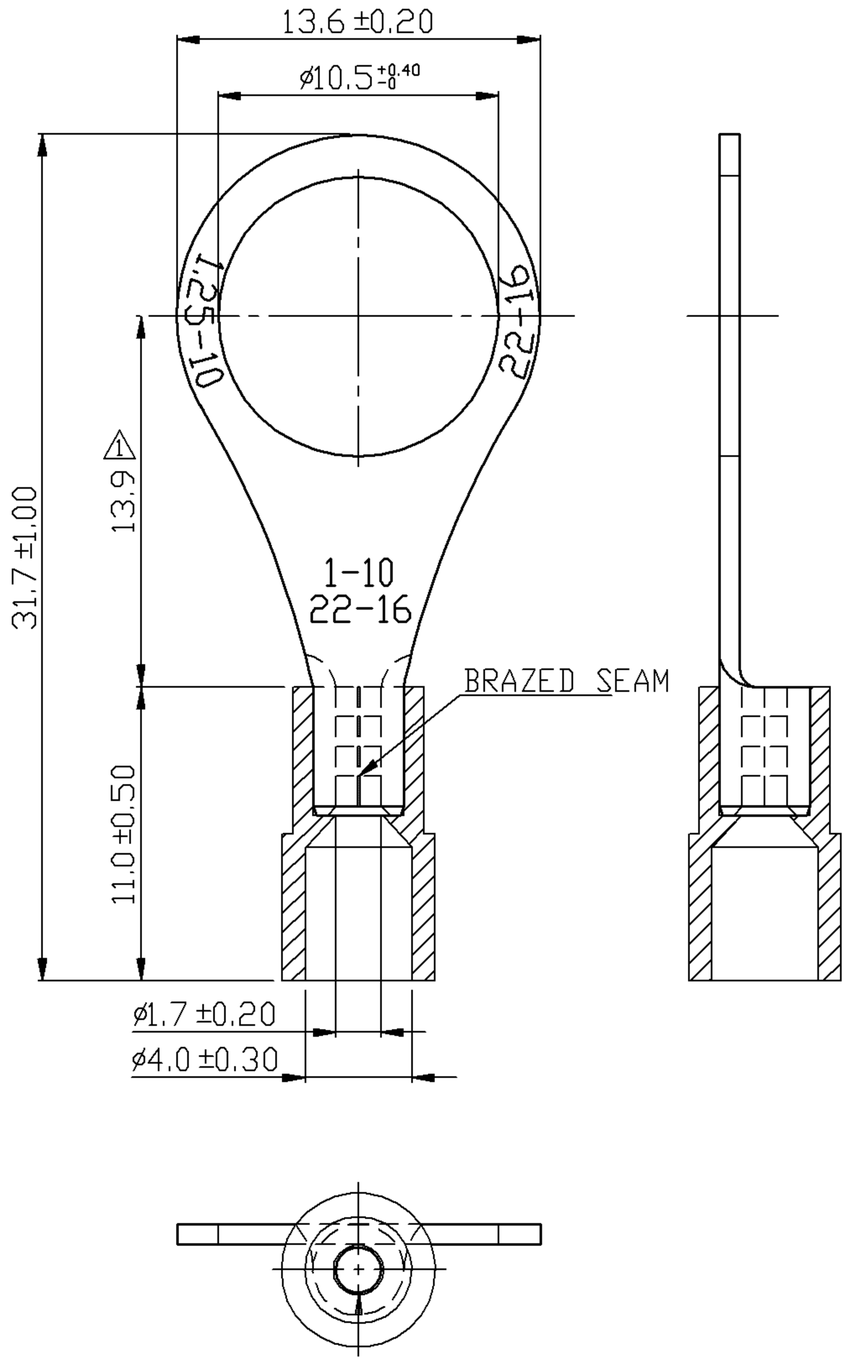

NOTE :

1. MAXIMUM ELECTRIC CURRENT :

A.W.G.	22	20	18	16
AMP.	9	12	17	18

2. MAXIMUM ELECTRICAL RATING : 105°C 600 VOLTS MAX.
3. INSULATION MATERIAL : NYLON
4. INSULATION COLOR : RED
5. TERMINAL MATERIAL : COPPER
6. WIRE RANGE : 22-16 A.W.G. (0.5-1.5 mm^2)
7. TERMINAL SURFACE TREATMENT : TIN PLATED
8. TERMINAL THICKNESS : 0.75 mm

2 Tolerance Unless Otherwise Specified	
0 > mm ±	ANGLE
> mm ±	0°> ° REF ±
> mm ±	°> ° ±
> mm ±	°> ° ±

NAME	NYLON-INSULATED RING TERMINALS				UNIT	mm
PART NO.	RNYB1-10	MATERIAL	------		APPROVE	
NUMBER	KA-94384-C	SCALE	SHEET	PAGE	CHECKED	
DATE	2007/08/08	3/1	1-2	1OF2	DRAWN	謝 琬 如

KST® K.S. TERMINALS INC.