DL 5.0F-QUICK-REFERENCE-GUIDE

1 Installation tools

The following tools and instruments may be used to install the battery

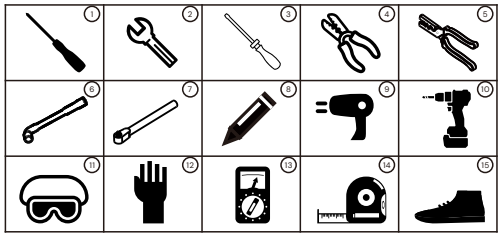

2 Packing List

After unpacking, check the checklist to confirm that all items are complete and undamaged:

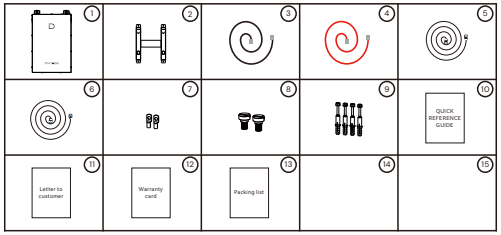

3 Product Interface Definition

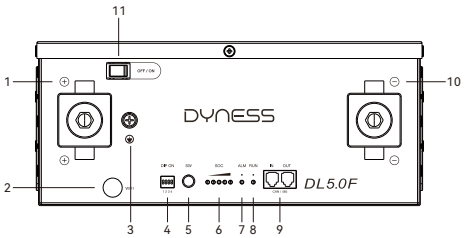

Item	Name
1	Positive socket
2	Wifi
3	Grounding
4	ADD
5	SW
6	SOC
7	ALM
8	RUN
9	CAN/485
10	Negative socket
11	Power switch

4 Installation Steps

Installation Notes

1.Elevation: no more than 4000m;
2.Operating environment: Indoor or outdoor installation, sites avoid the sunlight and no wind, no conductive dust and corrosive gas;
3.Installation location should be away from the sea to avoid brine and high humidity environment;
4.The ground for product arrangement shall be flat and level;
5.There is no flammable explosive materials near to the installation site;
6.The optimal ambient temperature is 15℃~30℃;
7.Keep away from dust and messy zones.

Standing mounting:
Place it directly on the ground and it's ready to use.

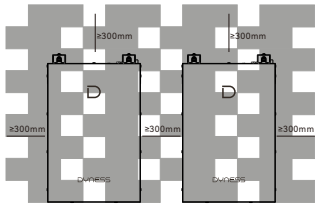

Wall mounting:
Wall mounting accessories are required.

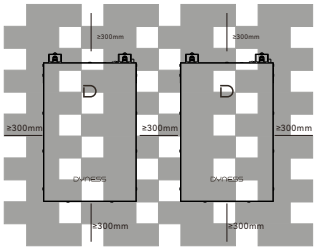

Step 1
Check and confirm that the switch on the front panel of DL5.0F is in the "off" state to ensure no live operation.

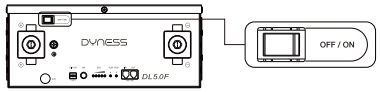

Step 2
Use the wall bracket (provided in accessory package) and mark the screw hole positions on the wall(The bracket must be perpendicular to the ground while drawing the holes).

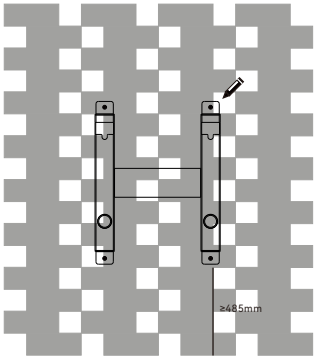

Step 3
According to the position of the mark, 4 holes in diameter 10mm and depth of more than 80mm are hit on the wall with an electric drill, which are used for fitting Hexagon Head Tapping Screw M6.
The wall for battery installation shall be solid brick or cement wall with strong bearing capacity and wall thickness no less than 100mm.

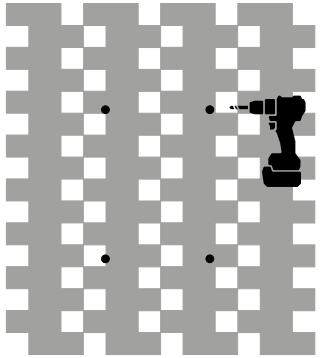

Step 4
Fix the wall bracket on the wall with M6 Hexagon Head Tapping Screw, twisting force keeps 9.8N·m.

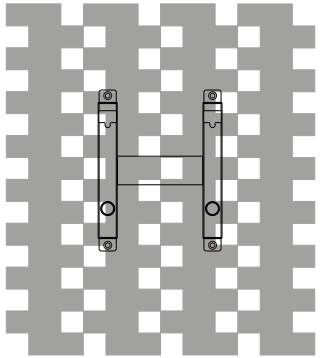

Step 5
As shown in the figure below, lock two M8 step screws to the battery module. Twisting force keeps 11.8N·m.

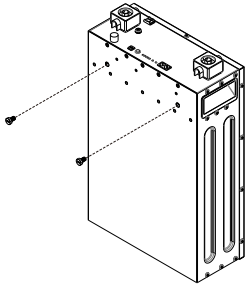

Step 6
Ensure that the two screw heads on the back of the chassis are inserted into the slots of the wall mount bracket.

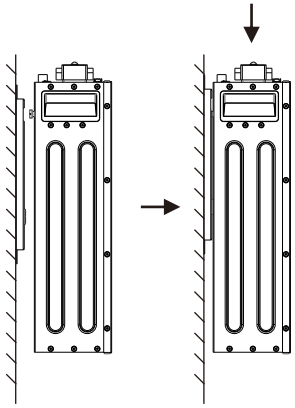

5 Wiring Steps

Step 1
Remove the positive and negative socket shields and grounding screws

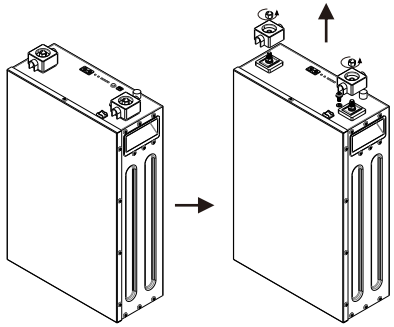

Step 2
1.Crimp the grounding cable (using the two OT terminals from the accessory kit);
2.Install the positive and negative cables (the cable is included in the accessory kit);
3.Reinstall the positive and negative socket protective covers to their original positions and tighten the grounding screw.

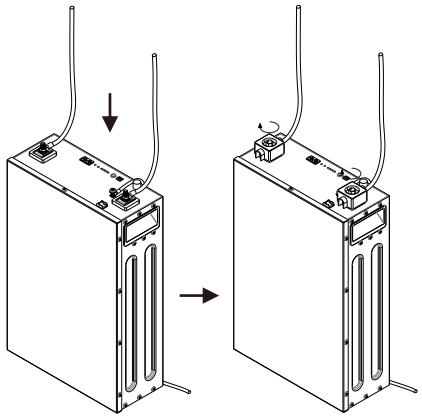

Step 3

Connect the inverter(The operations are as follows):

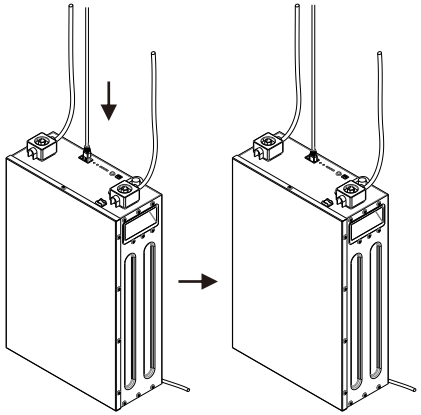

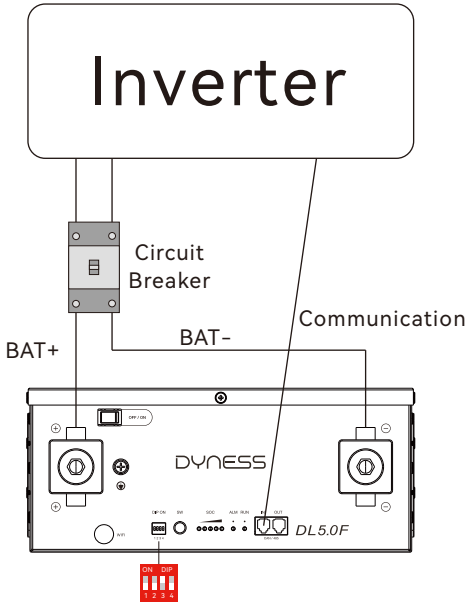

Before connecting the inverter, set DIP switch "#3" to the "ON" position

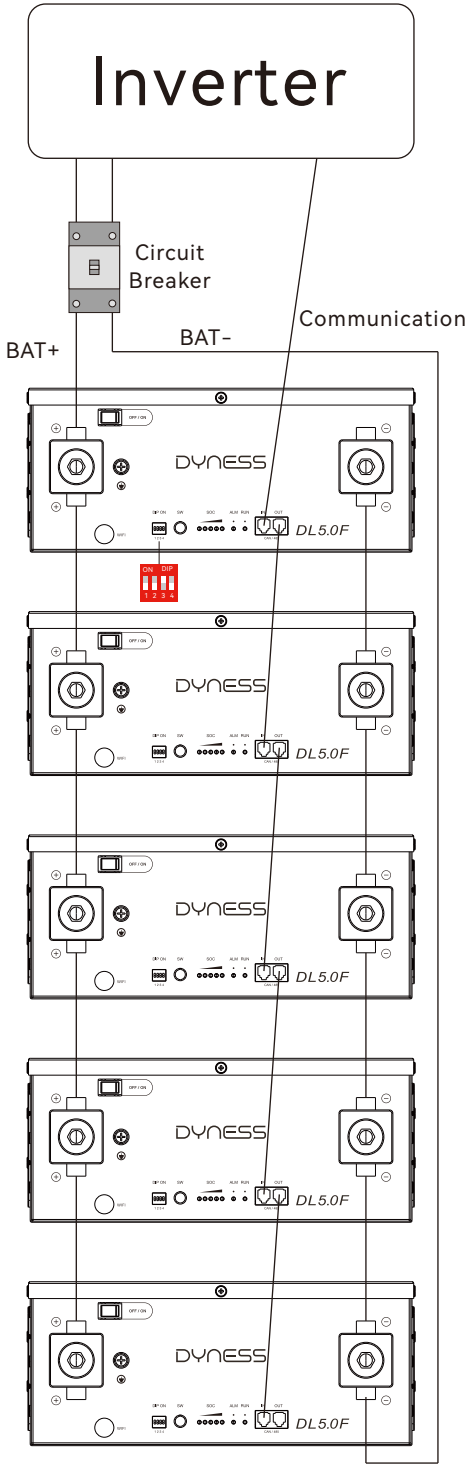

When multiple batteries are used in parallel, simply set the DIP switch of the main battery to the corresponding DIP mode, and the slave batteries do not need to have their DIP switches set.

Step 4

Battery Power On:

1.Tun the ON/OFF switch to the "ON" state.

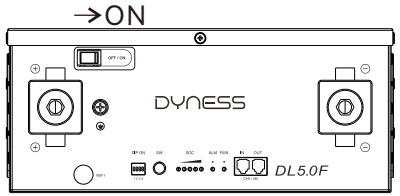

2.Press SW button 3S to wake up battery.

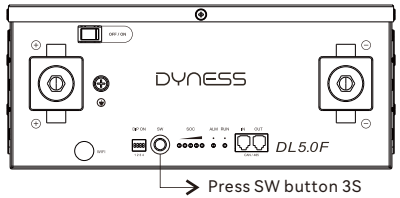

3.Check the system output voltage and led status.

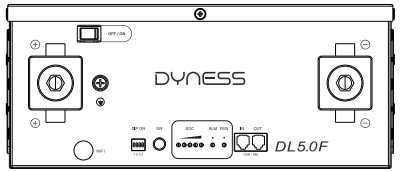

Explanation of DIP switches when connecting different inverters:

If the battery communicates with Dyness(D3.0K~8.0K-LS)、SMA、Victron、Ingeteam、Solplanet、SOFAR、Deye、Hoymiles、APsystems、LUXPOWER、MUST、SOSEN、Afore、Solis、GOODWE、TBB、SAJ、SOLAX turn the master DIP switch"#3" to "ON" position:

If the battery communicates with the Axpert-king/VMIII/MAX、Infinisolar、 Growatt SPH/SPA(CAN comm), turn the master DIP switch "#2" to "ON" position.:

If the battery communicates with the Growatt SPF HVM-P/ES/WPV by RS485 communication, turn the master DIP switch "#2" and "#3" to "ON":

If the battery communicates with the Schneider Conext Series, turn the master DIP switch "#1" and "#3" to "ON":

To obtain more detailed information, please scan the QR code to download our latest user manual:

Scan the QR code with your phone ⟶ Select Download

DL5.0F User Manual

Address: Building 1&2,7th-8th Floors, Building 3,No. 58 Nanhu Road, Chengnan Subdistrict, Wuzhong District, Suzhou City, Jiangsu Province
Email: service@dyness-tech.com
Tel: +86 400 666 0655
Web: www.dyness.com