User Manual

T-MAX Plus

In order to prevent improper operation before use, please read this manual carefully.

Content

1. Notes on This Manual 1
    1.1 Scope of Validity 1
    1.2 Target Group 1
    1.3 Symbols Used 1
    1.4 Symbols Explanation 1
2. Safety Precautions 3
    2.1 Unpacking and Inspection 3
    2.2 Package Safety 3
    2.3 Electrical Connection Safety 4
    2.4 Operation Safety 5
    2.5 Maintenance Safety 5
    2.6 Disposal Safety 6
3. Introduction 7
    3.1 Product Introduction 7
    3.2 Size 7
    3.3 LED Indicator Status 8
    3.4 Component Description 8
        3.4.1 Battery PACK 9
        3.4.2 Liquid Cooling Unit 10
    3.5 Circuit Diagram 12
    3.6 Energy Management Mode 13
    3.7 Backup Options 14
    3.8 AFCI Function 16
        3.8.1 Function Introduction 16
        3.8.2 Alarm Clear 17
        3.8.3 AFCI Protection Configuration 18
4. Technical Parameters 20
    4.1 System Parameters 20
        4.1.1 Hybrid Model Parameters 20
        4.1.2 AC Model Parameters 23
5. Unpacking and Handling 27
    5.1 Check after Unpacking 27
    5.2 Unpacking Precautions 27
    5.3 Storage 27
        5.3.1 Storage Time and Environment 27
        5.3.2 Storage with Low SOC 28
    5.4 Transportation 28
        5.4.1 Forklift Transportation 28
        5.4.2 Crane Handling 29
    5.5 Handling Before Unpacking 29
        5.5.1 Handling Method 29
        5.5.2 Forklift Handling Steps 29
        5.5.3 Crane Handling Step 29

5.6 Unpacking and Inspection 30
5.7 Transportation After Unpacking 31
5.7.1 Forklift Transportation 31
5.7.2 Crane Handling 31
6. Installation 33
6.1 Installation Safety 33
6.2 Check for Physical Damage 33
6.3 Packing List 33
6.4 Mounting 35
6.4.1 Installation Tools 35
6.4.2 Installation Site Requirement 35
6.4.3 Shell Ground 40
7. Electrical Connection 41
7.1 Safety Precautions 41
7.2 DC Wiring 41
7.2.1 PV Configuration 42
7.2.2 Assembling DC Connectors 44
7.3 AC Wiring 46
7.3.1 AC Wiring Requirements 46
7.3.2 Wiring Steps 47
7.4 Ground Wiring 48
7.5 EPS Ground Connection 49
7.6 Meter Connection 51
7.7 Parallel Connection 53
7.7.1 Parallel Systems 54
7.7.2 Switch Parallel Connection 57
7.7.3 Parallel Parameters Configuration 57
8. Main Function Implementation 61
8.1 Reactive Function Setting 61
8.2 Diesel Generator 63
8.2.1 Generator Wiring 63
8.2.2 Parameters Configuration 64
9. Commissioning 66
9.1 Inspection before Commissioning 66
9.2 Unfolding EMS 67
9.3 ESS Start-Up 68
9.4 Configuring EMS 69
9.5 ESS Shutdown 74
9.5.1 Normal Shutdown 74
9.5.2 Shutdown in Case of Malfunction or Emergency 75
9.6 Upgrade via USB Drive 75
10. Maintenance 78
10.1 Routine inspection items 78
10.2 Maintenance of Liquid Cooling Unit 79

10.3 Maintenance of Battery 81
10.4 Other Maintenance Projects 82
10.5 System Cleaning 83
10.6 Cabinet Refinishing 84
10.6.1 Paint Refinishing Instructions 84
10.6.2 Paint Repairing Steps 85
10.7 Alarm List 86

1. Notes on This Manual

1.1 Scope of Validity

This manual describes the assembly, installation, commissioning, maintenance and troubleshooting of the following model(s) of our products:

TM241kWh-49kW-H, TM241kWh-50kW-H, TM241kWh-60kW-H, TM241kWh-80kW-H, TM241kWh-99kW-H, TM241kWh-100kW-H, TM241kWh-124kW-H, TM241kWh-125kW-H, TM241kWh-49kW-AC, TM241kWh-50kW-AC, TM241kWh-60kW-AC, TM241kWh-80kW-AC, TM241kWh-99kW-AC, TM241kWh-100kW-AC, TM241kWh-124kW-AC, TM241kWh-125kW-AC.

	Note! ● The product is classified into two models: the Hybrid model (including T-MAX Plus-H-V1 and T-MAX Plus-H-V2) and the AC model (including T-MAX Plus-AC-V1 and T-MAX Plus-AC-V2). ● T-MAX Plus-H-V2 and T-MAX Plus-AC-V2 are only for on-grid mode. Off-grid mode and genset switching are not supported.

1.2 Target Group

This manual is for qualified electricians. The tasks described in this manual only can be performed by qualified electricians.

1.3 Symbols Used

This section explains the symbols shown on the inverter and on the type label:

Symbols	Explanation
	Danger! "Danger" indicates a hazardous situation which, if not avoided, will result in death or serious injury.
	Warning! "Warning" indicates a hazardous situation which, if not avoided, could result in death or serious injury.
	Caution! "Caution" indicates a hazardous situation which, if not avoided, could result in minor or moderate injury.
	Note! "Note" provides important tips and guidance.

1.4 Symbols Explanation

This section explains the symbols shown on the inverter and on the type label:

Symbols	Explanation
CE	CE mark. The inverter complies with the requirements of the applicable CE guidelines.

	Beware of hot surface. The inverter can become hot during operation. Avoid contact during operation.
	Danger of high voltages. Disconnect from the grid and the PV generator before opening the device.
	Danger. Risk of electric shock!
15min	Danger to life due to high voltage. After disconnecting all external power supplies to the inverter, wait at least 15 minutes before opening the cover for inspection or maintenance.
	The product can be recycled.
	Read the manual.
	The product should not be disposed as household waste.
RoHS	This mark indicates that the product meets EU environment protection certification requirements.
	This mark indicates that the product complies with the electrical safety, electromagnetic compatibility, and telecommunications regulatory requirements applicable in Australia and New Zealand.
UK CA	This mark indicates that the product meets the UK's regulatory requirements for safety, health, environmental protection, and other applicable standards.

2. Safety Precautions

The ESS is designed and tested in accordance with international safety requirements. However, certain safety precautions must be taken into account when installing and operating this unit. The installer must read and follow all instructions, cautions, and warnings in this installation manual.

	Warning! • It is strictly prohibited to operate the product (including, but not limited to, handling, installation, electrical connection, powering up, maintenance, working at height, etc.) in bad weather, such as thunder, lightning, rain, snow, or winds of more than force six grades. • In case of fire, evacuate the building or product area and call the fire alarm. In any case, re-entry into the burning area is strictly prohibited.
	Note! • All operations including transport, installation, start-up, and maintenance, must be carried out by qualified, trained personnel. • The electrical installation & maintenance of the unit shall be conducted by a licensed electrician and shall comply with local wiring rules and regulations. • Please operate the equipment under the condition that you are familiar with and understand the contents of this manual and have the appropriate tools. • The product is a Class I radio equipment and complies with requirements of Directive 2014/53/EU.

2.1 Unpacking and Inspection

	Note! • Check all safety signs, warning labels and nameplates on the product. • Safety markings, warning labels and nameplates must be clearly visible and not be removed or covered before the product is scrapped. • Upon receipt of the product, check the appearance of the product and components for damage, check whether the product received is consistent with the actual product ordered, if there is a problem with the above check items, please do not install and contact us.

2.2 Package Safety

	Danger! • Make sure the product is free of any electrical connections before installation. • When installing, if drilling is required, make sure you have avoided the pipeline and electric wire in the wall.
	Warning! • Before installation, check the unit to ensure it is free of any transport or handling damage, which could affect insulation integrity or safety

	clearances. Choose the installation location carefully and adhere to specified cooling requirements. Unauthorized removal of necessary protections, improper use, incorrect installation, and operation may lead to serious safety and shock hazards or equipment damage. • Any time the unit has been disconnected from the public network, please be extremely cautious as some components can retain charge sufficient to create a shock hazard. Prior to touching any part of the unit please ensure surfaces and equipment are under touch with safe temperatures and voltage potentials before proceeding.
⚠	**Caution!** • If the product supports lifting and handling methods and needs to be lifted by heavy tools, it is prohibited for people to pass or stay underneath the product. • When handling the product, please consider the weight of the product and take care to maintain balance to prevent the product from tipping or falling.
☞	**Note!** • Before handling the product, always check to make sure that the tools you are using have been regularly maintained. • Before connecting the unit to the power distribution grid, contact the local power distribution grid company to get appropriate approvals. This connection must be made only by qualified technical personnel. • Do not install the equipment in adverse environmental conditions such as in close proximity to flammable or explosive substances; in a corrosive environment; where there is exposure to extremely high or low temperatures; or where humidity is high. • Do not use the equipment when the safety devices do not work or are disabled. • Inform the manufacturer about non-standard installation conditions. • Use personal protective equipment, including gloves and eye protection during the installation.

2.3 Electrical Connection Safety

⚠	**Danger!** • Before making electrical connections, make sure that the unit is not damaged, otherwise it may be dangerous! • Always make sure that the unit and all switches connected to it are disconnected before electrical connections are made, otherwise there is a risk of electric shock. • When making electrical connections, be sure to wear personal protective equipment and use special insulating tools. • Before touching a DC cable, always use a measuring device to ensure that the cable is not energized. • The unit must not be connected to a PV string that requires positive or negative grounding.

⚠	**Warning!** • Before supplying power, connect the ground wire. • Incorrect grounding can cause personal injury, death or equipment failure and increase electromagnetic interference. • Ensure that the size of the grounding wire meets the requirements of the safety regulations. • The cables used in the PV power system must be of suitable size, firmly connected and well insulated. • Before connecting the DC connector to the unit, please check the positive and negative polarity of the PV string and insert the DC connector into the corresponding DC terminal. • During the installation and operation of the unit, please make sure that the positive or negative pole of the PV string will not be shorted to ground. Otherwise, it may cause AC and DC short circuit of the unit, resulting in product damage, and loss caused is not covered by the warranty.

2.4 Operation Safety

When routing cables, ensure a distance of at least 30 mm between the cables and heat-generating components or areas to protect the insulation layer of cables from aging and damage.

⚠	**Danger!** • Do not touch the product enclosure. • It is strictly forbidden to plug and unplug any connector on the unit. • Do not touch any wiring terminal of the unit. Otherwise, electric shock may occur. • Do not disassemble any parts of the unit. Otherwise, electric shock may occur. • It is strictly forbidden to touch any hot parts of the unit (such as the heat sink). Otherwise, it may cause burns. • Do not connect or remove any PV string or any PV module in a string. Otherwise, electric shock may occur. • If the unit is equipped with a DC switch, do not operate it. Otherwise, it may cause device damage or personal injury. • RF exposure warning: To satisfy RF exposure requirements, a separation distance of 20 cm or more should be maintained between this device and persons during device operation.

2.5 Maintenance Safety

Risk of unit damage or personal injury due to incorrect service!

⚠	**Danger!** • Before maintenance, disconnect the AC circuit breaker on the grid side and then the DC switch. If a fault that may cause personal injury or device damage is found before maintenance, disconnect the AC circuit breaker and BAT switch; turn off the DC switch, if any; then wait until the system is completely powered off before proceeding. Otherwise, a fire inside the product or an explosion may occur, causing personal injuries.

	• After the unit is powered off for 15 minutes, measure the voltage and current with professional instrument. Only when there is no voltage nor current can operators who wear protective equipment operate and maintain the unit. • Even if the unit is shut down, it may still be hot and cause burns. Wear protective gloves before operating the unit after it cools down. • The power grid side may generate voltage. Always use a standard voltmeter to ensure that there is no voltage before touching.
☞	**Note!** • Do not use the equipment if any operating anomalies are found. Avoid temporary repairs. • All repairs should be carried out using only approved spare parts, which must be installed in accordance with their intended use and by a licensed contractor or authorized service representative. • If the paint on the unit enclosure falls or rusts, repair it in time. Otherwise, the unit performance may be affected. • Do not use cleaning agents to clean the unit. Otherwise, the unit may be damaged, and the loss caused is not covered by the warranty. • As the unit contains no parts that can be maintained, never open the enclosure of the unit or replace any internal components without authorization. Otherwise, the loss caused is not covered by the warranty. • To avoid the risk of electric shock, do not perform any other maintenance operations beyond those described in this manual. If necessary, contact us. Otherwise loss caused is not covered by the warranty.

2.6 Disposal Safety

Please scrap the product in accordance with relevant local regulations and standards to avoid property losses or casualties.

3. Introduction

3.1 Product Introduction

The ESS liquid-cooled energy storage system optimizes and integrates high-performance three-level topology PCS, batteries, BMS, EMS systems, thermal management systems, power distribution and fire protection systems.

The ESS liquid-cooled energy storage system integrates harmonic control and three-phase imbalance control, and also has the functions of peak shaving and valley filling, peak load regulation and frequency modulation. Multiple sets of cabinets can be directly connected in parallel to achieve capacity expansion and plug-and-play, forming an integrated and conveniently installed smart energy product.

System advantages:

- LED status indications
- Optimized MPP tracking technology*
- 4 MPP trackers or 8 MPP trackers*
- Wide MPPT input voltage range*
- Remote monitoring via PC or Mobile App
- Supports I/V scanning*, intelligent diagnosis*, night SVG, AFCI detection* and fault recording
- Supports protection functions such as anti-islanding protection, DC reverse connection protection*, AC short-circuit protection, leakage current protection, and surge protection
- IP55 protection level

* Available for the H version only.

3.2 Size

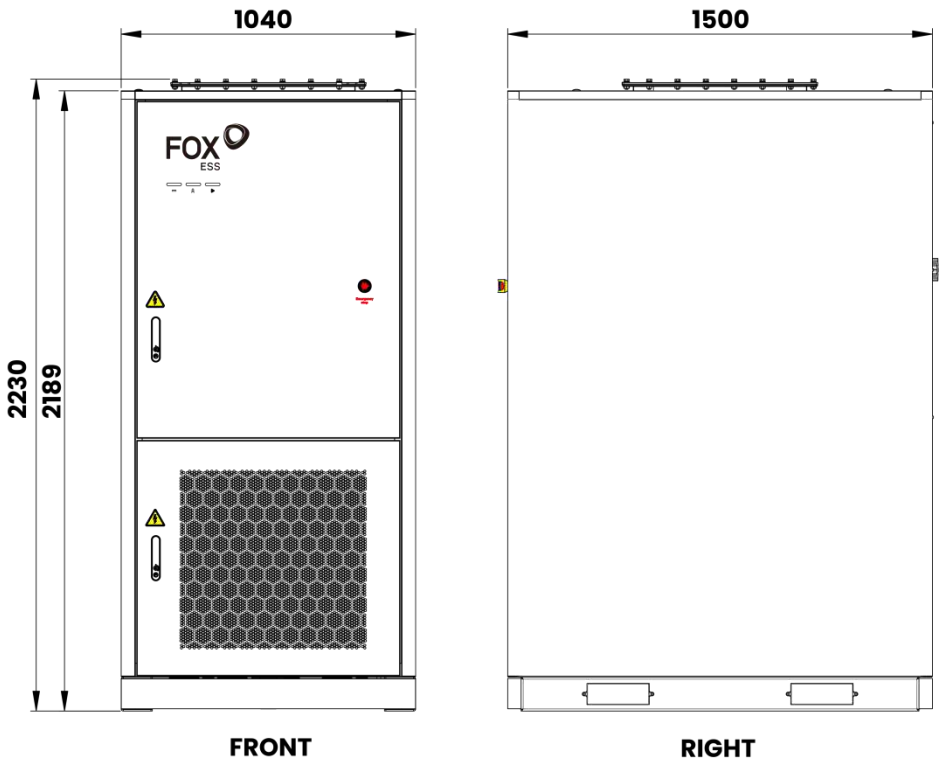

(unit: mm)

3.3 LED Indicator Status

Status			Description
			N/A
DC Status	**On-Grid**	**Run/Fault**	
Green	Green	Green	The unit is running in on-grid state and exporting power to the grid.
Blinking Green	Off	Off/Red	The DC is on and the grid is off.
Off	Blinking Green	Off/Red	The DC is off and the grid is on.
Blinking Green	Blinking Green	Off/Red	The DC is on, the grid is on, and the unit is starting up.
Green	Off	Green	The DC is on, the grid is off and the unit is running in backup state.
Off	Off	Off/Red	Both the DC and grid are off.

3.4 Component Description

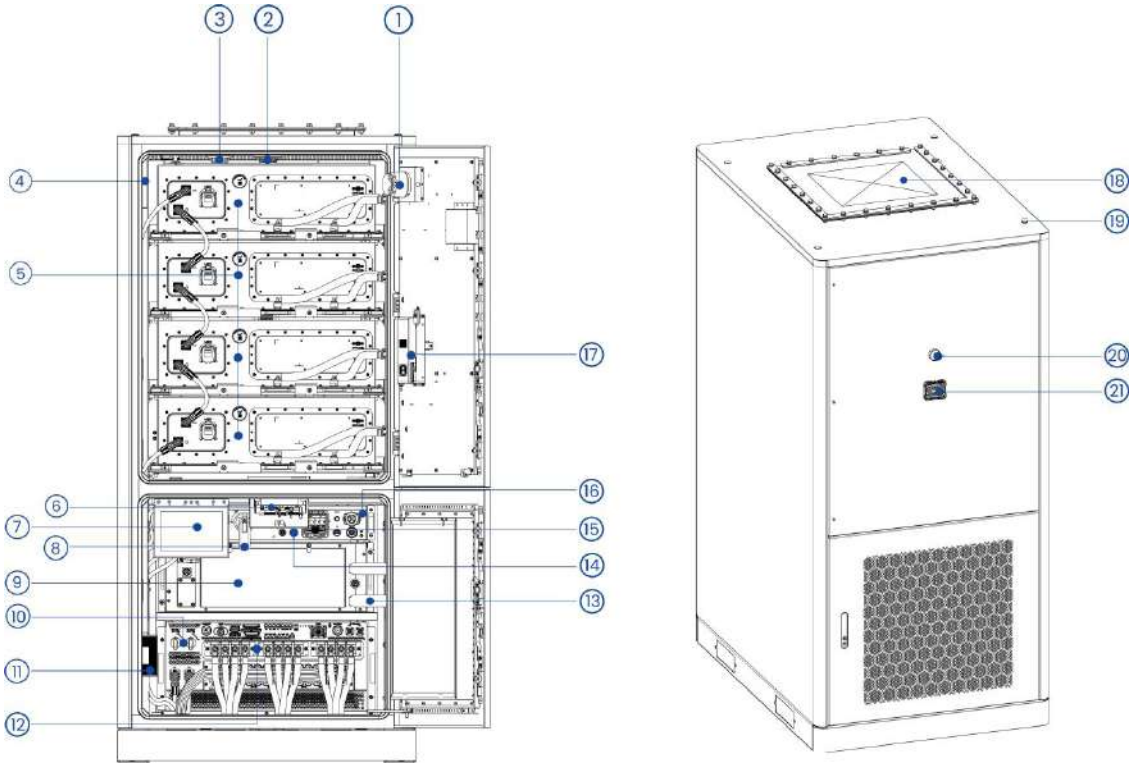

NO.	Name	NO.	Name
①	Audible and visual alarm	⑫	PCS
②	Temperature detector	⑬	Liquid cooling piping
③	Smoke detector	⑭	BAT power button
④	Fire extinguisher	⑮	LIQUID & TR (24V) switches
⑤	Battery PACK	⑯	High voltage box
⑥	Energy Management System (EMS)	⑰	Dehumidifier
⑦	Touch screen	⑱	Explosion-proof relief plate
⑧	BAT switch	⑲	Threaded lifting hole
⑨	Liquid cooling unit	⑳	4G antenna
⑩	DC switch 1 & DC switch 2*	㉑	Waterproof vent valve
⑪	Switch		

* Available for the H version only

3.4.1 Battery PACK

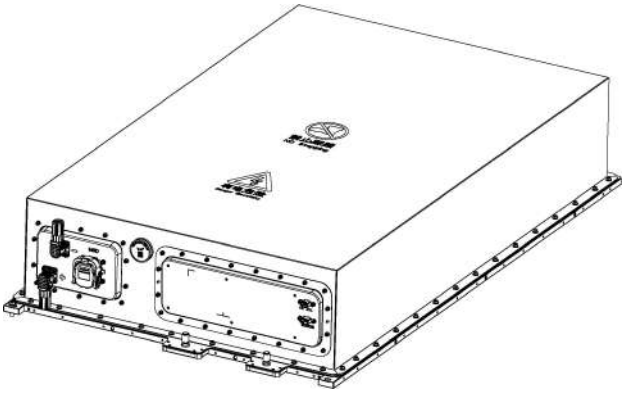

Items	Specification
Model type	GM-PACK-60
Cell Type [V/Ah]	LFP 3.2/314
Battery Pack Capacity [kWh]	60.29
Grouping method	1P60S
Rated voltage [V]	192
Maximum charge voltage [V]	219
Discharge cut-off voltage [V]	168
Rated current [A]	176
Max. charge/discharge current [A]	190
Number of temperature sensors	32
Cooling method	liquid cooling
IP Protection Rating	IP67
Recommended (rated) charge method	Charging the battery with 190A constant current until 215V, then constant voltage until charging current reduces to 0.05C
Recommended (rated) discharge	Discharging the battery with 190A

method	constant current to discharge cut-off voltage 168V
Charge temperature range [°C]	0~55
Discharge temperature range [°C]	-25~55
Storage temperature range [°C]	-10~35
Nominal weight [kg]	397
Nominal dimension [mm]	808 x 1303 x 253

3.4.1.1 Fire protection system

Brief description of the firefighting programme:
The energy storage cabinet is generally divided into two separate protection zones, which can really extinguish the fire quickly and keep it from re-igniting, ensuring that the energy storage station is safe to use.

The two separate protection zones are:

- PACK level of protection: The cell is the source of ignition and the high voltage box is the protection unit.
- Cluster level protection: The high voltage box is the source of ignition and the cluster is the protection unit.

How the system works:
When a fire occurs when the core is out of thermal control, PACK level protection can quickly detect the fire and activate the fire extinguishing device at the first time to extinguish the fire; or cluster level protection quickly intervenes, the smoke detector outputs an electrical signal to activate the audible and visual alarm to notify the personnel to make a deal, and the smoke and temperature detector outputs an electrical signal to activate the fire extinguishing device to extinguish the fire, and the synchronous output of the feedback signal to the EMS, to notify the personnel to deal with the situation in a timely manner.

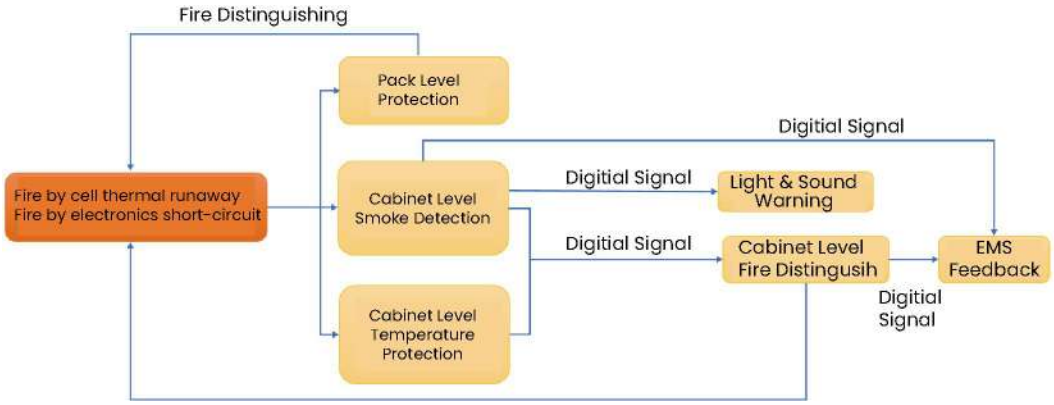

System Fire Control Logic

3.4.2 Liquid Cooling Unit

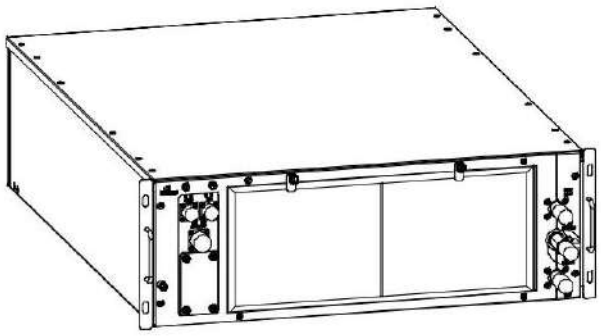

Items	Specification
Rated Working Voltage [V]	220~240V 50/60Hz
Maximum operating current [A]	12.5
Cooling capacity [kW]	3.0
Calorific value [kW]	2.0
Operating environment temperature range [°C]	-30 ~ +55
Coolant type	50% ethylene glycol solution
Rated circulating water flow [L/min]	30
Rated external circulation head [kPa]	60
Max. power consumption [kW]	2.34
Maximum pressure of the water circuit system [kPa]	180
Unit size (W×D×H) [mm]	700×900×245
IP Protection Rating	IPX5
Air outlet method	Exhaust

3.4.2.1 Main Components

The liquid-cooled unit mainly consists of a compressor, a condenser, a throttling element, an evaporator, a water pump, an expansion tank, a PTC liquid heater and necessary control components.

3.4.2.2 Function

The liquid cooling unit is used to regulate the temperature of the battery pack in the ESS to ensure that it always works within the appropriate temperature range to maintain the optimal working condition of the system. It has the following functions:

- Precise measurement and monitoring of coolant temperature.
- Effective heat dissipation when the battery pack temperature is high to prevent thermal runaway accidents.
- Preheating is carried out when the battery temperature is low to raise the battery temperature and ensure charging and discharging performance and safety at low temperature.

3.4.2.3 Technical Principle and Advantages

The cooling principle of the air-cooled chiller is to remove the heat generated by the battery through coolant convection, thus lowering the battery temperature. The liquid medium possesses a high heat transfer coefficient and a large specific heat capacity, enabling rapid heat removal. This is highly effective in lowering the overall

temperature of the battery pack and improving the consistency of its temperature field.

3.4.2.4 Working Models

- **Cooling Mode**

Both the refrigerant circulation circuit and the coolant circulation circuit are open.

On the refrigerant side: The compressor compresses the low-temperature, low-pressure gaseous refrigerant into a high-temperature, high-pressure gaseous refrigerant, which enters the condenser. By the condensing fan forced convection cooling, phase change and release heat into medium temperature and high pressure liquid refrigerant, into the throttle valve. In the throttle valve isenthalpic throttling and pressure reduction occurs to become a low-temperature, low-pressure liquid mist refrigerant into the evaporator. In the evaporator, the liquid mist refrigerant evaporates and absorbs the heat of the coolant to become a low-temperature, low-pressure gaseous refrigerant, which then enters the compressor to start the next cycle.

On the coolant side: The liquid pump does the work so that the high temperature coolant in the battery pack cooling plate enters the evaporator and exchanges heat with the refrigerant to become the low temperature coolant, which flows back into the battery pack cooling plate to cool down the battery pack.

- **Heating Mode**

The refrigerant circulation circuit, compressor and condensing fan are off, and the coolant circulation circuit is on.

On the coolant side: The water pump is started and the heater is turned on, and the coolant flows through the heater to heat up and then flows back into the battery pack cooling plate to achieve heating and insulation of the battery pack.

3.5 Circuit Diagram

The following figure shows the circuit.

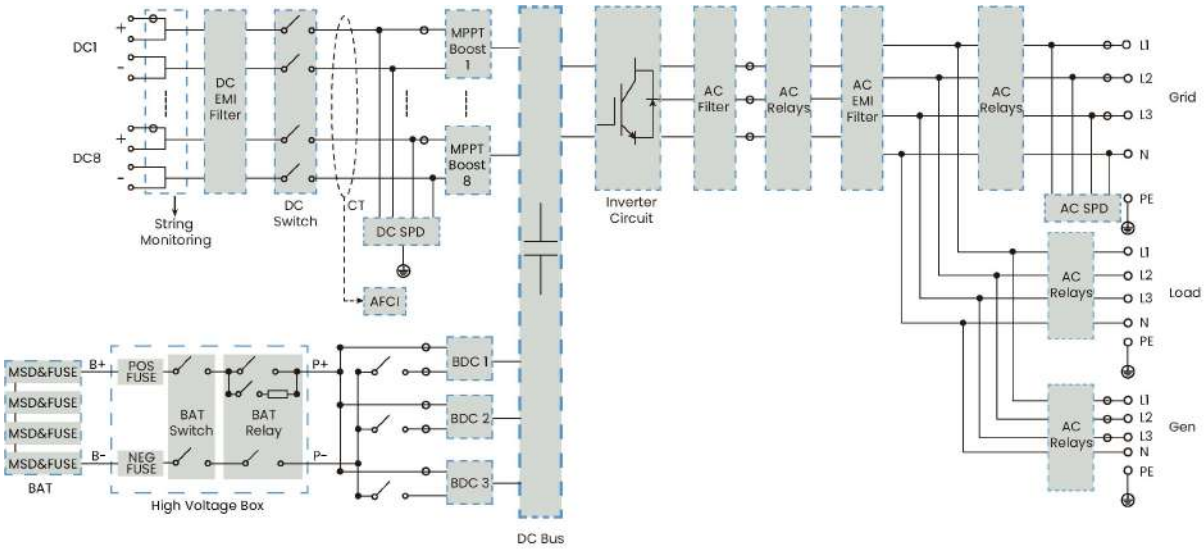

- The AC version does not include PV or BDC.
- PV Input Section
  - Multiple PV inputs are monitored via current sensors.
  - DC EMI filters are used to suppress electromagnetic interference, ensuring stable operation and EMC compliance.
- DC Switches and MPPT Boost Modules
  - The system is equipped with independent DC switches for each PV input group, enabling safe maintenance and isolation.

- 4-MPPT and 8-MPPT boost modules dynamically optimize PV input performance under varying sunlight conditions.

- DC Surge Protection and Arc Fault Detection
  - A DC Surge Protection Device (DC SPD) is integrated to protect the system against lightning and transient voltage surges.
  - The AFCI (Arc Fault Circuit Interrupter) module detects and interrupts dangerous arc faults in the DC circuit.
- Centralized DC Bus and Inverter Bridge
  - All power inputs converge at the DC Bus, which feeds the inverter circuit.
  - The inverter converts DC to AC with high precision, enabling both grid-tied and off-grid operations.
- AC Output Processing
  - Post-inversion, AC power passes through AC filters and EMI filters to reduce harmonics and EMI.
  - AC relays provide isolation and controlled switching between various operation modes.
- Grid and Load Interface
  - The system delivers AC output to grid (L1, L2, L3, N) and to local loads.
  - It includes an Emergency Power Supply (EPS) output for backup use during grid outages.
- AC Surge Protection and Output Safety
  - AC SPD is installed to protect the output side from surge events.
  - Additional AC relays manage load-side disconnection or switching when needed.

3.6 Energy Management Mode

-Self-Use (For H version only)

When the operating mode is set to the Self-Use, the system is designed to store any surplus electricity generated by the solar system after meeting the power requirements of the household loads. In situations where the solar production is insufficient to meet the total household load, the system will provide additional power support by discharging stored energy, thereby reducing the dependency on grid electricity. If the backup reserve's State of Charge (SOC) is set to 100%, the system will prioritize charging the battery to its maximum capacity exclusively from solar power and will not discharge energy. In the event of a grid failure, the system will automatically switch to powering the household loads using the stored energy.

-Back Up (For H version only)

When the grid is off, the system will supply emergency power from PV or battery to the home loads (Battery is necessary in off-grid mode).

In the event of a grid failure, the battery will automatically power the household loads. Once the grid power is restored, the system will seamlessly transition back to charging the battery from both solar and the utility grid.

-Feed-in Priority (For H version only)

The Feed-in priority mode prioritizes electricity sales to generate income.

When the PV is generating, the PV energy will be first supplied to the loads, the excess energy will be fed into the grid. If the feed-in limits are achieved, the energy will be stored in the battery.

-Peak Shaving

The peak shaving mode implements energy management strategies by setting threshold SOC and grid import limits according to production schedules, reducing overall energy consumption during peak periods.

Peak shaving requires setting two parameters: the import limit and threshold SOC.

- When battery SOC is above the threshold SOC, the system operates in self-use mode.
- When your battery SOC drops below the set threshold SOC, the system automatically activates peak shaving to reduce electricity costs. During this mode, your battery will only provide power when your home's electricity demand exceeds the import limit you've set.
- If grid draw continuously exceeds the import limit, battery depletion will occur until reaching the minimum SOC protection level. At this point, peak shaving automatically suspends to prevent battery damage, switching to fail-safe operation. The threshold SOC setting thus balances daily self-consumption with extended peak-cost avoidance.

-Force Charge

Force Charge mode can be enabled in the Module Schedule.

When the grid is available and the battery SOC is below the target maximum SOC, the system will draw power from the grid to charge the battery until the target SOC is reached.

-Force Discharge

Force Discharge mode can be enabled in the Module Schedule.

When the grid is available and the battery SOC is higher than the MinimumSoC-OnGrid threshold, the system will discharge power to the grid until the SOC decreases to MinimumSoC-OnGrid.

3.7 Backup Options

The system offers two backup options: whole-home backup and partial backup. The selection of loads for each option should be determined during the system design phase.

Whole-home Backup

To enable the whole-home backup option, connect all household loads to the backup subpanel. This allows the storage system to support all household energy loads in case of a grid failure.

Whole-home Backup (DC Couple)

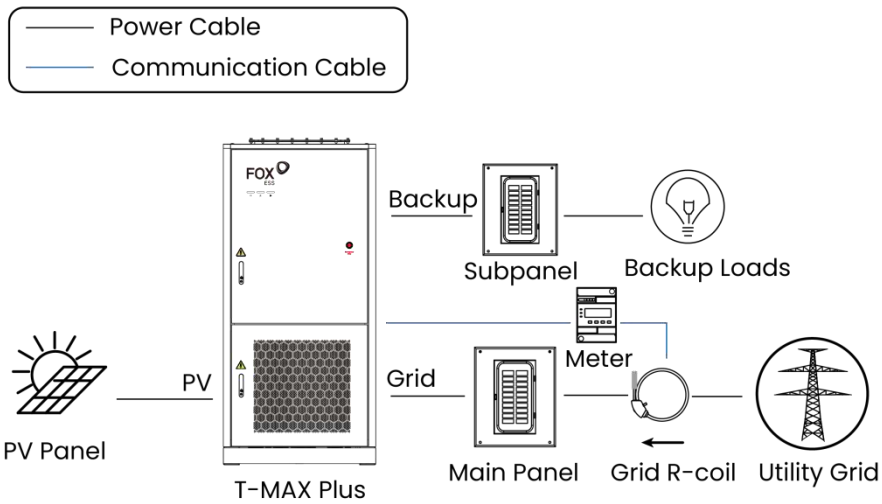

	Note! The AC version does not support PV connection.

Whole-home Backup (AC Couple)

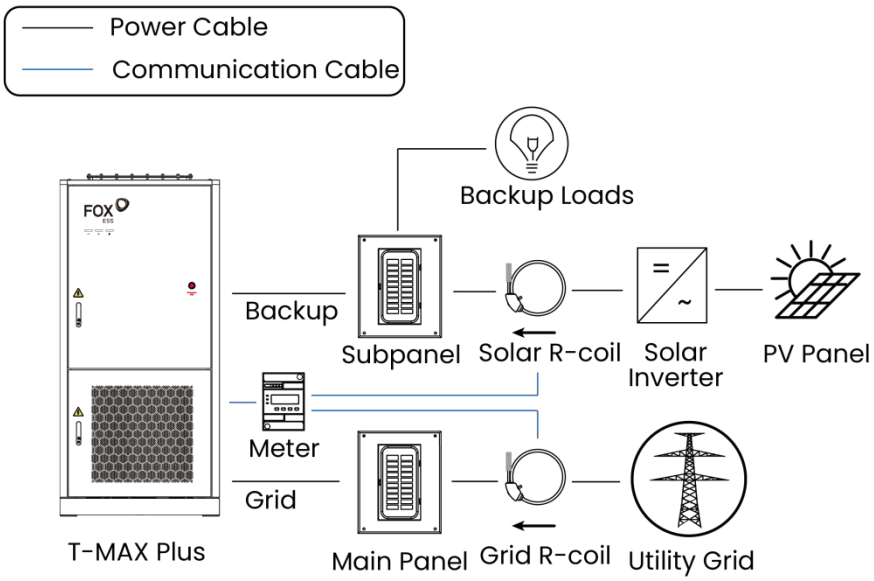

Partial Backup

To configure the system in a partial backup mode, it is necessary to identify the backup loads beforehand. For this purpose, connect the backup loads to the backup panel and the non-backup loads (i.e., non-essential loads) to the main panel. In the event of a grid failure, the storage system powers only the backup loads. This ensures prioritized power supply to backup loads, leaving non-backup loads unpowered.

Partial-home Backup (DC Couple)

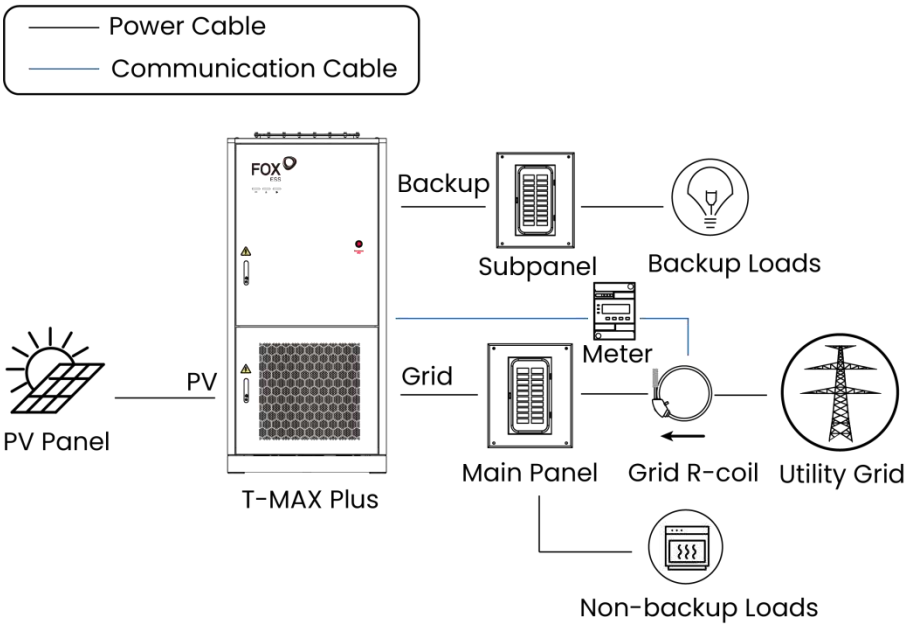

	Note! The AC version does not support PV connection.

Partial-home Backup (AC Couple)

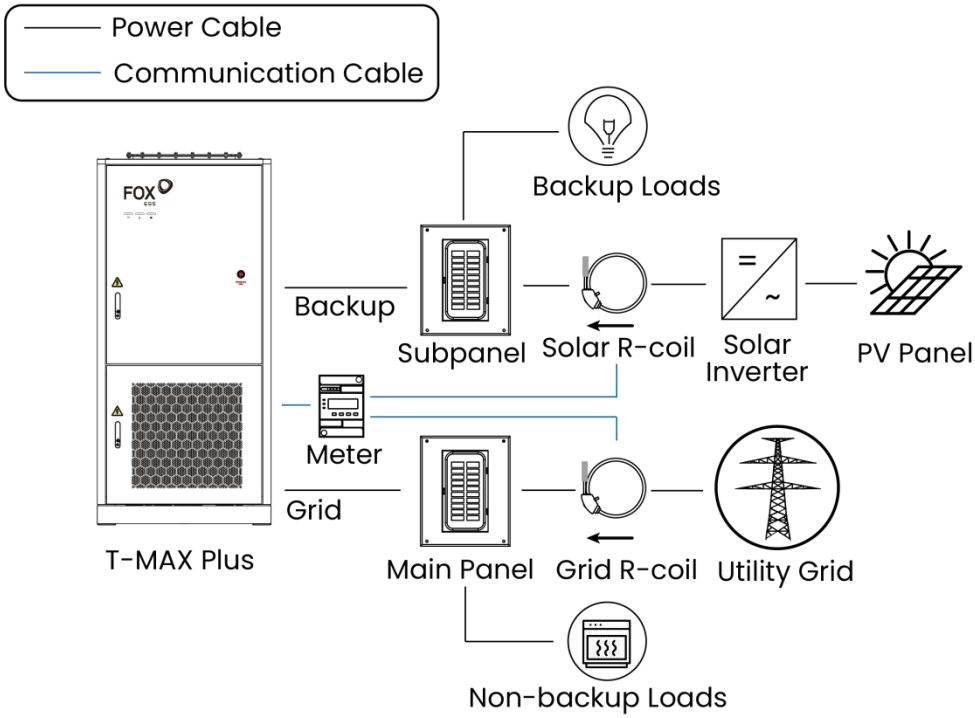

3.8 AFCI Function

When the photovoltaic modules or cables of the unit are poorly connected or damaged, it may generate arcs. Arcs can potentially lead to fires.

The unit is equipped with AFCI detection function, which is used to detect series arc faults between the photovoltaic array and the unit. By continuously monitoring the current signal of the circuit between the photovoltaic array and the unit in real-time, it will rapidly shut down when an abnormal arc signal is identified owing to the AFCI function, or it will rapidly shut off the circuit if an RSD is installed. This helps to prevent electrical safety issues caused by arcs, thereby providing assurance for the safety of users' lives and properties.

	Note! The AFCI function is available for the H version only.

3.8.1 Function Introduction

- AFCI Monitoring: This function can be used to detect whether serial fault arc occurs in the loop between PV array and the unit.
- AFCI Self-test: This function is intended to test whether AFCI works as normal.
- AFCI Alarm Clearing: When the unit detects the AFCI alarm, it stops working. Clear the AFCI alarm so that the unit can restart the detection.
- Protection Coverage: Two types of classifications are defined for AFCI protection: “F” (Full Coverage) and “P” (Partial Coverage). Full coverage protection (“F”) is available for the unit.
- AFPE (Arc Fault Protection Equipment): The unit is equipped with a fully integrated AFPE, which is implemented within the unit, including arc plates and current sensors.
- Method of Implementation: Two implementation methods are available for AFCI

protection, “D” and “I”. “D” represents “Distributed detection system", where the AFPE comprises more than one device. The devices may be standalone devices or partially integrated within the power conversion equipment (PCE). “I” represents “PCE integrated device”, where the AFPE is implemented within a PCE connected to the PV array. The unit adopts "|"

3.8.2 Alarm Clear

The unit is equipped with AFCI alarm automatic clearing mechanism. If the alarm is triggered < 5 times within 24 hours, the unit will automatically clear the alarm; if the alarm is triggered ≥ 5 times within 24 hours, the lockout protection state will be triggered. Manual alarm clearing locally is required to making the unit back into normal operation.
Alarm clearing mechanism: Upon detection of a real arc alarm, the device will trigger an arc alarm and stop operating. For the first to fourth occurrences of arc alarms within the same day, the device will stop operating for 5 minutes and wait for the alarm to be automatically cleared before restarting. When the fifth or subsequent arc alarm occurs, the device will stop operating and will not automatically resume operation on the same day.
For the first to fourth occurrences of arc alarms, the ARM will send a command to clear the arc alarm after 5 minutes of each alarm. Then the arc alarm will be cleared and the device will restart and reconnect to the grid. When the fifth arc alarm is detected, the ARM will not clear the arc alarm, and the device will report the arc alarm and stop operating. The user needs to manually clear the alarm to restart the device and reconnect it to the grid. Alternatively, the user can wait for the alarm to be automatically cleared the next day. For instructions on how to manually clear fault alarms, please refer to “Manual Alarm Clearing Locally” and “Manual Re-clearing Alarm Remotely”.

The unit has two manual alarm clearing methods:

3.8.2.1 Manual Alarm Clearing Locally

When an arc alarm occurs, user can clear alarm manually. User can access the Web Server (192.168.7.1) by connecting to the monitoring module WiFi. Select “Advanced (String & PE Monitoring)” → “AFCI Alarm Clearing” → “Enable” → “Edit”. Then wait for the alarm to be cleared, and restart the unit.

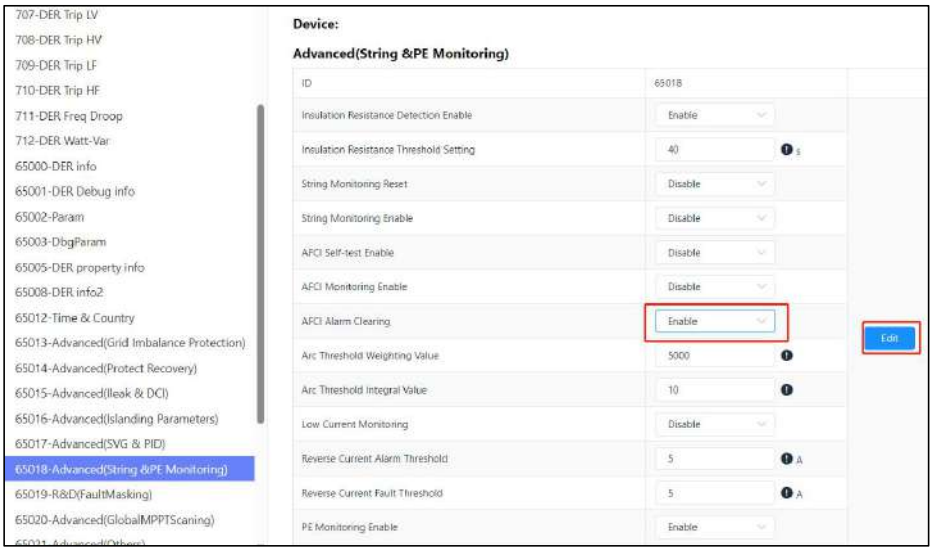

3.8.2.2 Manual Re-clearing Alarm Remotely

When an arc alarm occurs, user can clear alarm by remote access to AFPE. User can log

in FoxCloud remotely, then locate the corresponding unit of the target power station. Click "Remote Setting". Choose "Advanced (String & PE Monitoring)" → "AFCI Alarm Clearing" → "Enable" → "OK". Then wait for the alarm to be cleared, and restart the unit.

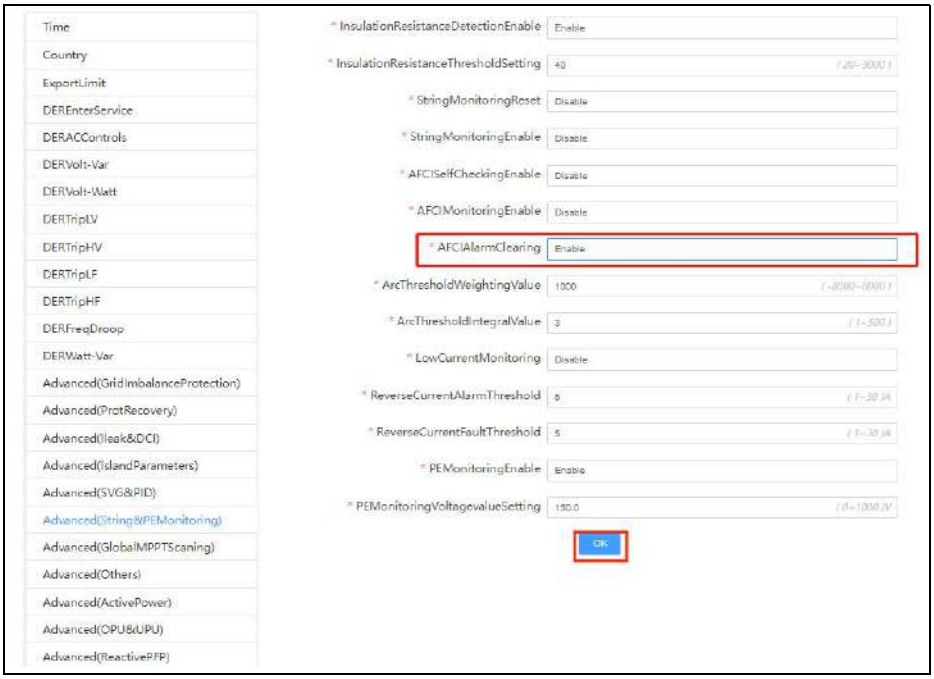

3.8.3 AFCI Protection Configuration

The AFCI configuration is as shown in the following table.

Model	TM241kWh-49kW-H TM241kWh-50kW-H TM241kWh-60kW-H TM241kWh-49kW-AC TM241kWh-50kW-AC TM241kWh-60kW-AC	TM241kWh-80kW-H TM241kWh-99kW-H TM241kWh-100kW-H TM241kWh-124kW-H TM241kWh-125kW-H TM241kWh-80kW-AC TM241kWh-99kW-AC TM241kWh-100kW-AC TM241kWh-124kW-AC TM241kWh-125kW-AC
Classification	F–I–AFPE–1–8–1	F–I–AFPE–1–16–1
Rated Channel Current	160 A	320 A
Maximum Current per Input Port	20 A	
Rated Interruption Current	20 A	
Number of Monitored Channels	1	

Number of Monitored Strings per Input Port	2	
Arc Plash Detection and Protection		
Standard	IEC63027	
Protection Coverage	Full Coverage	
Method of Implementation	Integrated	
Functionality	AFPE	
Monitored String per Input Port	1	
Input Port per Monitored Channel	8/1	16/1
Monitored Channels	1	

4. Technical Parameters

4.1 System Parameters

4.1.1 Hybrid Model Parameters

Model	TM241kWh-49kW-H	TM241kWh-50kW-H	TM241kWh-60kW-H	TM241kWh-80kW-H	TM241kWh-99kW-H	TM241kWh-100kW-H	TM241kWh-124kW-H	TM241kWh-125kW-H
BATTERY SPECIFICATION								
Battery Type [V/Ah]	LFP 3.2/314							
Battery Pack Energy [kWh]	60.29							
Battery System Energy [kWh]	241							
Voltage Range [V]	672-876							
Number of Temperature Sensors	128							
Max. Charging Current [A]	190							
Max. Discharging Current [A]	190							
Battery Pack Protection Level	IP67							
PV SPECIFICATION*								
Max. DC Array Power [kW]	98	100	120	160	198	200	248	250
Max. DC Input Power [kW]	98	100	120	160	198	200	248	250
Withstand Voltage [V]	1000							
PV DC Input Voltage Range	180-950							
Startup Voltage [V]	180							
Nominal DC Operating Voltage [V]	750							
MPPT Voltage Range [V]	180-850							
MPPT Voltage Range With Full Load [V]	370-850	370-850	440-850	300-850	370-850	370-850	460-850	460-850

MPPT No./String per MPPT	4/2			8/2				
Max. Current per MPPT [A]	40							
Max. Short Circuit Current per MPPT [A]	50							
AC OUTPUT (GRID)								
Nominal AC Output Power [kW]	49	50	60	80	99	100	124	125
Max. AC Output Power [kW]	49	55	66	88	99	110	124	130 (Only for Brazil)/ 137.5
Nominal AC Output Current [A]	74.4A@ 380V 70.7A@ 400V	76.0A@ 380V 72.2A@ 400V	91.2A@380V 86.6A@ 400V	121.6A@ 380V 115.5A@ 400V	150.4A @380V 142.9A@ 400V	152.0A@ 380V 144.4A @400V	188.4A @380V 179.0A@ 400V	190.0A@ 380V 180.4A@ 400V
Max. AC Output Current [A]	74.4A@ 380V 70.7A@ 400V	83.6A@ 380V 79.4A@ 400V	100.3A@ 380V 95.3A@ 400V	133.7A@ 380V 127A@400V	150.4A @380V 142.9A@ 400V	167.2A@ 380V 158.8A @400V	188.4A @380V 179.0A@ 400V	198.5A@ 380V 198.5A@ 400V
Nominal AC Voltage [V]	220/380，230/400, 3W+N+PE							
AC Voltage Range [Un]	0.8-1.2							
Nominal AC Frequency [Hz]	50/60							
Frequency Range [Hz]	50/60,±5							
Power Factor	0.8 Leading, 0.8 Lagging							
Max. THDi	<3%							
AC INTPUT (GRID/ GENERATOR)								
Max. AC Input Power [kVA]	207							
Max. Bypass Current [A]	300							
Max. Power for Battery Charged [kW]	49	55	66	88	99	100	100	100
Nominal AC Voltage [V]	220/380，230/400, 3W+N+PE							
Frequency Range	50/60,±5							

[Hz]								
EPS OUTPUT (LOAD)								
Max. AC Output Power [kVA]	49	55	66	88	99	110	124	130 (Only for Brazil)/ 137.5
Peak. AC Output Power (10S) [kVA]	155							
LRA Current [A]	300							
Nominal AC Voltage [V]	220/380，230/400, 3W+N+PE							
Nominal AC Frequency [Hz]	50/60							
Switching Time (ms)	<10							
Max. THDv	<3%@Rated Power							
EFFICIENCY								
Max. Round Trip Efficiency	89.5%							
Max. Efficiency	98.0%							
PROTECTION								
DC Input Switch	YES							
PV Reverse Polarity	YES							
AC Over Current Protection	YES							
AC Output Short Circuit Protection	YES							
AC/DC Surge Protection	Class II							
ISO Detection	YES							
Residual Current Detection	YES							
Ground Fault Detection	YES							
AFCI	YES							
String Current Detection	YES							
GENERAL SPECIFICATION								
Dimension (WxHxD) [mm]	1040x2230x1500							
Weight [KG]	<2400							

Operating Temperature [°C]	–25 ~ 55
Type of Cooling	Liquid Cooling
Operating Altitude [m]	≤ 3000
Humidity	0 ~ 100%
Noise [dB]	<75 @ 1m
DOD	0 ~ 100 %
Cycle Life	≥8000
Communication Interfaces	Ethernet/4G
Ingress Protection(IP) Rating	IP55
Corrosion Protection	C5
Fire Protection	Smoke detector, Heat detector, Alarm sounder, Cabinet-level/PACK-level aerosol, Explosion vent
Diesel Generator Compatibility	YES

Notes:

- * indicates that the parameters are available for the H version only.
- In parallel systems, PV power variation between units shall not exceed 20%. For example, if one unit is connected to a 100 kW PV module, all other units shall be connected to PV modules with power ranging from 80 kW to 120 kW.

4.1.2 AC Model Parameters

Model	TM241kWh-49kW-AC	TM241kWh-50kW-AC	TM241kWh-60kW-AC	TM241kWh-80kW-AC	TM241kWh-99kW-AC	TM241kWh-100kW-AC	TM241kWh-124kW-AC	TM241kWh-125kW-AC
BATTERY SPECIFICATION								
Battery Type [V/Ah]	LFP 3.2/314							
Battery Pack Energy [kWh]	60.29							
Battery System Energy [kWh]	241							
Voltage Range [V]	672-876							
Number of Temperature Sensors	128							

Max. Charging Current [A]	190							
Max. Discharging Current [A]	190							
Battery Pack Protection Level	IP67							
AC OUTPUT (GRID)								
Nominal AC Output Power [kW]	49	50	60	80	99	100	124	125
Max. AC Output Power [kW]	49	55	66	88	99	110	124	130 (Only for Brazil)/ 137.5
Nominal AC Output Current [A]	74.4A@ 380V 70.7A@ 400V	76.0A@ 380V 72.2A@ 400V	91.2A@ 380V 86.6A@ 400V	121.6A@ 380V 115.5A@ 400V	150.4A@ 380V 142.9A@ 400V	152.0A@ 380V 144.4A@ 400V	188.4A@ 380V 179.0A@ 400V	190.0A@ 380V 180.4A@ 400V
Max. AC Output Current [A]	74.4A@ 380V 70.7A@ 400V	83.6A@ 380V 79.4A@ 400V	100.3A@ 380V 95.3A@ 400V	133.7A@ 380V 127A@ 400V	150.4A@ 380V 142.9A@ 400V	167.2A@ 380V 158.8A@ 400V	188.4A@ 380V 179.0A@ 400V	198.5A@ 380V 198.5A@ 400V
Nominal AC Voltage [V]	220/380，230/400, 3W+N+PE							
AC Voltage Range [Un]	0.8-1.2							
Nominal AC Frequency [Hz]	50/60							
Frequency Range [Hz]	50/60,±5							
Power Factor	0.8 Leading, 0.8 Lagging							
Max. THDi	<3%							
AC INTPUT (GRID/GENERAT-OR)								
Max. AC Input Power [kVA]	207							
Max. Bypass Current [A]	300							
Max. Power for Battery Charged [kW]	49	55	66	88	99	100	124	125
Nominal AC	220/380，230/400, 3W+N+PE							

Voltage [V]								
Frequency Range [Hz]	50/60,±5							
EPS OUTPUT (LOAD)								
Max. AC Output Power [kVA]	49	55	66	88	99	110	124	130 (Only for Brazil)/ 137.5
Peak. AC Output Power (10S) [kVA]	155							
LRA Current [A]	300							
Nominal AC Voltage [V]	220/380，230/400, 3W+N+PE							
Nominal AC Frequency [Hz]	50/60							
Switching Time (ms)	<10							
Max. THDv	<3%@Rated Power							
EFFICIENCY								
Max. Round Trip Efficiency	91.5%							
Max. Efficiency	98.5%							
PROTECTION								
DC Input Switch	YES							
PV Reverse Polarity	YES							
AC Over Current Protection	YES							
AC Output Short Circuit Protection	YES							
AC/DC Surge Protection	Class II							
ISO Detection	YES							
Residual Current Detection	YES							
Ground Fault Detection	YES							
AFCI	YES							
String Current Detection	YES							

GENERAL SPECIFICATION	
Dimension (WxHxD) [mm]	1040x2230x1500
Weight [KG]	<2400
Operating Temperature [° C]	–25 ~ 55
Type of Cooling	Liquid Cooling
Operating Altitude [m]	≤ 3000
Humidity	0 ~ 100%
Noise [dB]	<75 @ 1m
DOD	0 ~ 100 %
Cycle Life	≥8000
Communication Interfaces	Ethernet/4G
Ingress Protection(IP) Rating	IP55
Corrosion Protection	C5
Fire Protection	Smoke detector, Heat detector, Alarm sounder, Cabinet-level/PACK-level aerosol, Explosion vent
Diesel Generator Compatibility	YES

5. Unpacking and Handling

5.1 Check after Unpacking

After unpacking, the following items must be checked:

Serial number	Check item	Completion
1	The appearance shall be free of damage, scratches, dents, etc.	
2	The product comes with a complete range of options and accessories.	
3	The nameplate information is consistent with the ordered product model	
4	The warning label is not damaged, scratched, blurred, etc.	

5.2 Unpacking Precautions

It is not allowed to remove the packaging of ESS during storage, and it can only be removed when it is installed.
When receiving goods from the transport company, be sure to carefully inspect the products and check each item received against the delivery note. If any goods are missing or damaged, notify the transport company immediately upon discovery.
Before unpacking, please check whether the outer packaging of the product is intact and whether it is damaged, soaked, damp, deformed, etc.
Please open the package in order of layers and do not knock violently.
When unpacking, please check whether the product and its accessories have any damage, rust, or bruises on the surface.

5.3 Storage

5.3.1 Storage Time and Environment

1) The recommended maximum battery storage time is 6 months.
2) For the first installation, the interval between manufacturing dates of battery modules shall not exceed 3 months.
3) Regularly check whether the service environment of the unit meets the requirements, and the installation position is far away from the heat source.
4) The battery module should be stored in an environment with a temperature range between -10 °C ~ +55 °C, and charged regularly according to the table below with no more than 0.5 C (C-rate is a measure of the rate at which a battery is discharged relative to its maximum capacity) to the SOC of 50% after a long time of storage.

Storage Environment Temperature	Relative Humidity of Storage Environment	Storage Time	SOC
Below -10 °C	/	Not Allowed	/
-10 °C~0 °C	10%~90%	≤ 1 month	20%≤SOC≤50%
0 °C~35 °C	10%~90%	≤ 6 months	20%≤SOC≤50%
35 °C~55 °C	10%~90%	≤ 1 month	20%≤SOC≤50%

Above 55 °C	/	Not Allowed	/

	Note! If the battery is stored over one year, 5%~8% of the capacity may lose irreversibly.

5.3.2 Storage with Low SOC

After the product is powered off, static power consumption and self-discharge loss may occur in internal modules. Therefore, charge batteries in a timely manner and do not store the product in low SOC. Otherwise, the product may be damaged due to over discharge, and battery modules need to be replaced.

Storage in low SOC may occur in the following scenarios:

- The BAT SWITCH on the power control module is OFF.
- The power cables or signal cables are not connected.
- The batteries cannot be charged due to a system fault after discharge.
- The batteries cannot be charged due to incorrect configurations in the system.
- The batteries cannot be charged due to no PV input and long-term mains failure.

Regardless of scenarios, the batteries must be charged within the longest interval corresponding to the SOC when the batteries are powered off. If the batteries are not charged within the specified interval, they may be damaged due to over discharge.

Storage Environment Temperature	Power-Off SOC Before Storage	Maximum Charge Interval
0 °C~35 °C	0%≤SOC≤5%	7 Days

	Note! When the battery SOC decreases to 0%, charge the batteries within seven days. Permanent battery faults caused by delayed charge due to customer reasons are beyond the warranty scope.

5.4 Transportation

Please package the product strictly before transporting it by vehicle. Closed boxes must be used for long-distance transportation.

It is strictly prohibited to transport this product together with equipment or items that may affect or damage the product.

5.4.1 Forklift Transportation

It is necessary to test the fork. If it is not suitable, the forklift foot position needs to be adjusted. After testing that the fork is suitable, lift the ESS and move it to the appropriate position.

During transportation, the ESS tilt angle must be less than 10°, and the undulation height must be as low as possible.

It is forbidden to transport hydraulic trucks over long distances or on slopes, otherwise the hydraulic trucks may be damaged.

Please handle it gently when taking off and landing to avoid shock or vibration. When lowering the forklift, be careful not to press your feet.

Considering that the equipment is high and may block the driver's sight, it is recommended to arrange for personnel to guide the driver depending on the situation.

5.4.2 Crane Handling

Carry out a test lifting to confirm that the straps can bear the weight of ESS and there is no tilt when lifting.
After lifting, the swing angle must be less than 10°.
Before moving, make sure that the cabinet door is locked to avoid injuries caused by sudden opening during transportation.
Lift and place gently when taking off and landing to avoid shock or vibration.

5.5 Handling Before Unpacking

5.5.1 Handling Method

There are two ways to handle unopened packaging: forklift handling and crane handling.

5.5.2 Forklift Handling Steps

Packaged ESS full container products are moved by forklift on the pallet under the packaging, and the operators must be trained.
Adjust the width of the forklift foot so that the center of gravity falls in the middle of the forklift foot. Insert it in the position shown in the figure below.

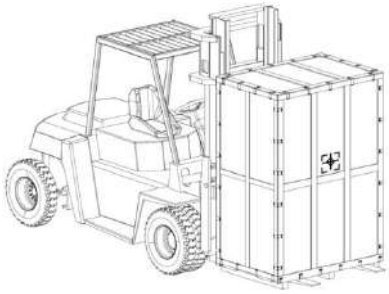

Forklift Handling Diagram

5.5.3 Crane Handling Step

Use flexible slings or straps. A single strap must be able to withstand a weight of no less than 3 tons.
Use the straps to tighten the cabinet and follow the steps below.

Schematic Diagram of Lifting and Handling with Packaging

☞	**Note!** The hook should be at least 1m away from the top of the cabinet. The inclination angle of the cabinet shall strictly comply with the requirements illustrated in the figure below, with the inclination angle α ≤ 10°.

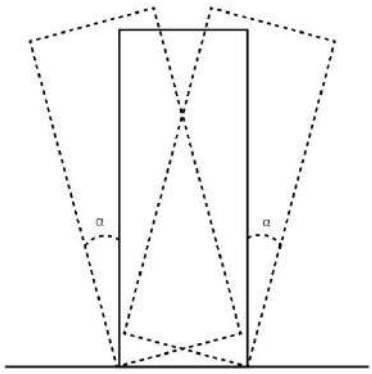

Requirements for Inclination Angle

5.6 Unpacking and Inspection

This equipment has undergone comprehensive testing and inspection before leaving the factory. However, damage may still occur during transportation. Before unpacking, please carefully check the outer packaging for any signs of damage, such as punctures or cracks.

Since the height of the cabinet exceeds 2m, please take protective measures for high-altitude operations when removing the outer packaging. For the unpacking steps, please refer to the figure below.

- Remove the top iron buckle with a flat-blade screwdriver, then take off the top coverplate.

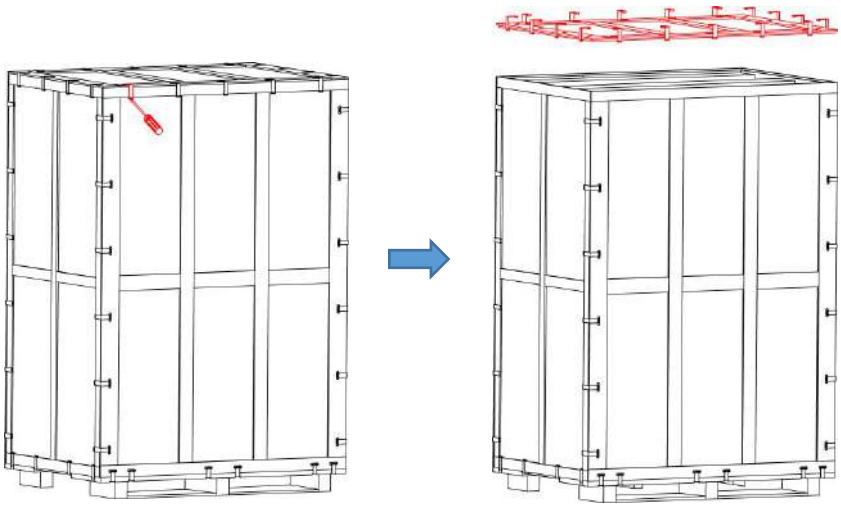

- Remove the side iron buckles with a flat-blade screwdriver, then take off the side panels.

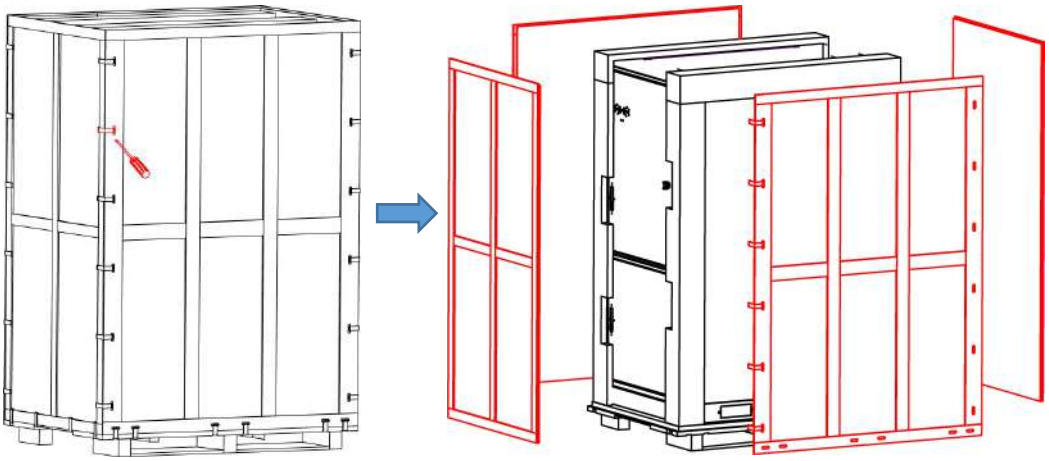

- Remove the PE bag and buffer cotton.
- When unpacking, please handle all packaging materials properly for future storage or relocation of the equipment.
- After unpacking, please check whether the equipment is intact and all accessories are complete. If there is any damage or missing accessories, please contact the after-sales staff immediately for handling.

5.7 Transportation After Unpacking

5.7.1 Forklift Transportation

Packaged ESS full container products are moved by forklift on the pallet under the packaging, and the forklift handling capacity is ≥ 3t.
Adjust the width of the forklift tines so that the center of gravity falls in the middle of the forklift foot. Insert it in the position shown in the figure below.

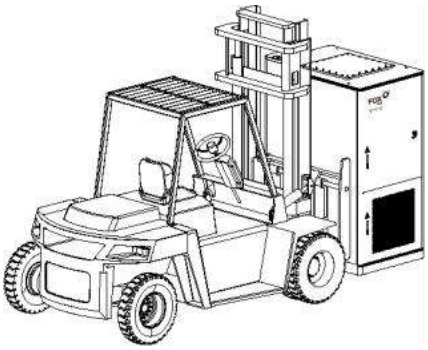

Side

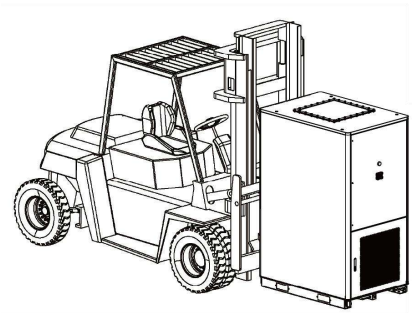

Front

5.7.2 Crane Handling

When moving without packaging, use flexible slings or straps. A single strap can bear a weight of no less than 3 tons.
Tie the cabinet tightly with straps and follow the diagram below.

	Note! The hook should be at least 1m away from the top of the cabinet. The tilt of the cabinet should be less than 10°.

6. Installation

6.1 Installation Safety

	Danger! Make sure there is no electrical connection before installation.
	Warning! • Please install the product in a well-ventilated environment. • Ensure that the heat dissipation system or vent is not blocked. • Do not install the product in a flammable or explosive or fuming environment.
	Caution! • When handling the product, please pay attention to the weight of the product and maintain balance to prevent the product from tipping or falling. • The bottom terminals and interfaces of the unit cannot directly contact the ground or other supports. The unit cannot be directly placed on the ground.
	Note! • Use personal protective equipment, including gloves and goggles, during installation. • Make sure to avoid the water and electricity wiring in the wall before drilling. • Protect the product from shavings and dust.

6.2 Check for Physical Damage

Make sure the unit has not been damaged during transportation. If there is any visible damage, such as cracks, please contact your dealer immediately.

6.3 Packing List

Open the package and take out the product, please check the accessories first. The packing list is as shown as below:

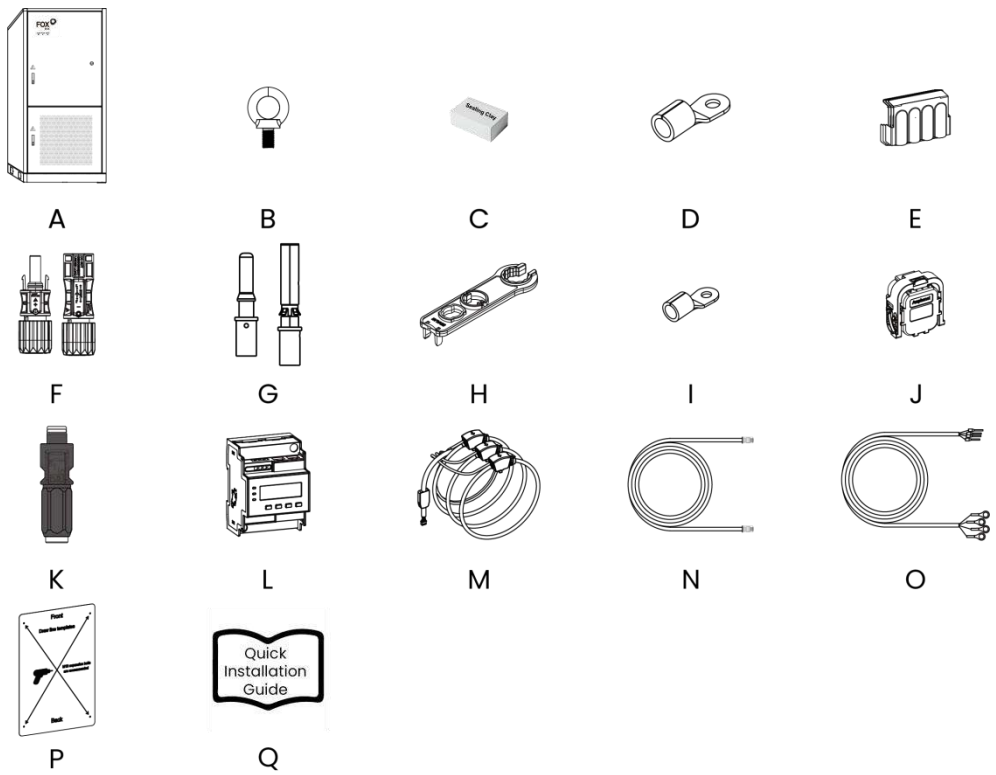

Object	Quantity	Description	Object	Quantity	Description
A	1	T-MAX Plus	**J**	4	PACK MSD
B	4	Eyebolt	**K**	1	EPS-PE Terminal
C	4	Sealing Clay	**L**	1	Meter
D	12	AC Terminal (DT120-10 300A×12)	**M**	2	Rogowski Coil (R-coil)
E	3	Transparent Protective Cover for AC Terminal	**N**	1	LAN Cable
F	16/32	DC Connector* (4 MPPT: Positive×8, Negative×8; 8 MPPT: Positive×16, Negative×16) (N/A for AC version)	**O**	1	Voltage Sampling Cable
G	16/32	DC Pin Plug* (4 MPPT: Positive×8, Negative×8; 8 MPPT: Positive×16, Negative×16) (N/A for AC version)	**P**	1	Drilling Template
H	1	DC Connector	**Q**	1	Quick Installation Guide

		Removal Tool* (N/A for AC version)			
I	5	Ground Terminal (RNB38-8S 150A×5)			

Notes:

- * indicates that the object is available for the H version only.
- TM241kWh-49kW-H, TM241kWh-50kW-H, and TM241kWh-60kW-H are provided with DC Connectors (Positive×8, Negative×8) and DC Pin Plugs (Positive×8, Negative×8).
- TM241kWh-80kW-H, TM241kWh-99kW-H, TM241kWh-100kW-H, TM241kWh-124kW-H, and TM241kWh-125kW-H are provided with DC Connectors (Positive×16, Negative×16) and DC Pin Plugs (Positive×16, Negative×16).

6.4 Mounting

6.4.1 Installation Tools

Tools required for installation include, but not limited to, the following recommended tools. If necessary, use other auxiliary tools on the spot.

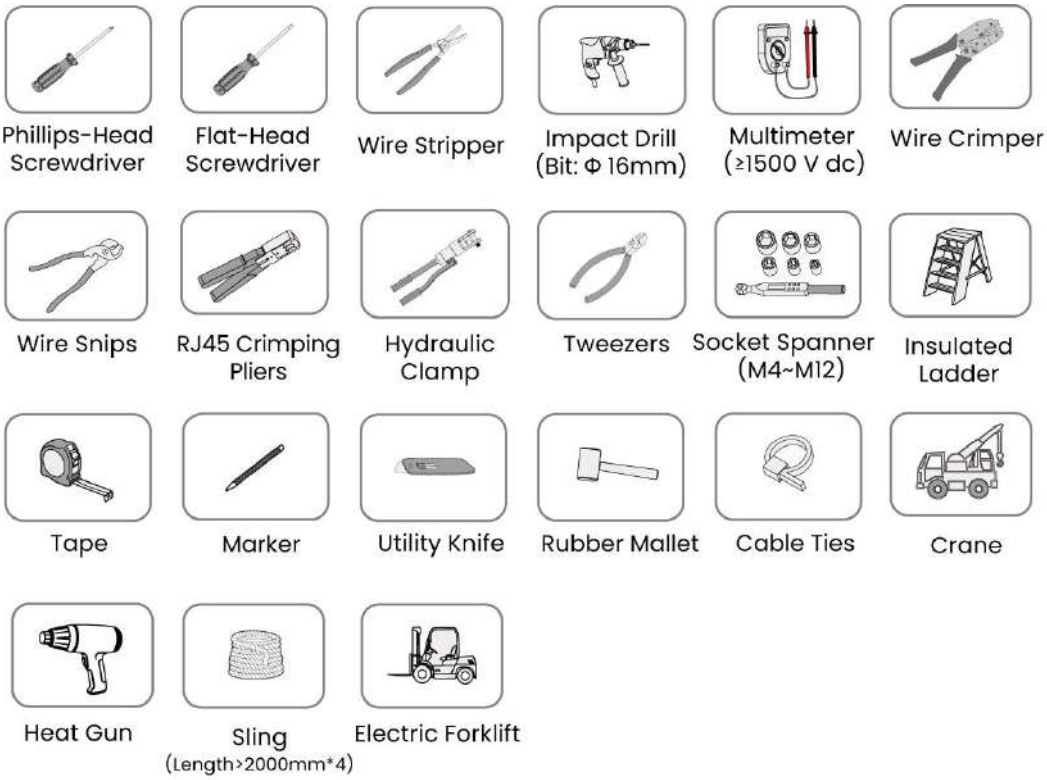

6.4.2 Installation Site Requirement

(1) Environment Requirement

Project	Environmental requirements
Installation site requirements	• The energy storage cabinet shall be installed in a sheltered location, preferably in an area protected from direct sea wind exposure. Do not install the equipment outdoors in salt-affected

	areas because it may be corroded. A salt-affected area refers to the region within 1000 m of the coast or prone to sea breeze. Regions prone to sea breeze vary with weather conditions (such as typhoons and monsoons) or terrains (such as dams and hills). • The air inlet and outlet must be professionally protected from rain, wind, sand and dust. • Make sure there are no trees around the installation location to prevent strong winds from blowing down branches or leaves that may block the product door or air inlet. • Necessary fireproofing, waterproofing and rodent-proofing treatments are required. • Keep away from areas where toxic and harmful gases are concentrated. • Keep away from flammable, explosive and corrosive items. • High salt spray and heavily polluted environments may cause corrosion and damage to the equipment, thereby affecting its service life and operational safety. Therefore, do not install this equipment in areas with high salinity or severe pollution. If installation in such environments is unavoidable, the following requirements shall be observed: ➢ C5 Class (Medium Corrosive Environment): ➢ Distance from coastline ≥ 1 km; installed with shielding or protective structures; salt spray concentration ≤ 0.05 mg/m³. ➢ C5 Class (High Corrosive Environment): ➢ Distance from coastline < 1 km; directly exposed to sea wind; salt spray concentration ≤ 0.1 mg/m³. ➢ Extreme Corrosive Environment: ➢ Salt spray concentration > 0.1 mg/m³. Installation of this product is not recommended. If installation in such environments is necessary, confirmation with the distributor or the manufacturer is required. ➢ The energy storage cabinet shall be periodically rinsed with fresh water to remove contaminants and salt residues. Any damage to coatings or sealing components shall be repaired promptly upon detection.
Altitude	• 3000m
Temperature	• 25°C ~ +55°C
Relative humidity	• 0%~100%. • Do not open the cabinet door when the air humidity exceeds 95%. • Avoid opening the cabinet door or performing maintenance or repair operations in rainy, thunderstorm or humid weather conditions

Failure to install the equipment in accordance with the above requirements may result in malfunction or damage caused by salt spray corrosion. Any related liabilities and losses shall be borne by the user.

(2) Space Requirement

Sufficient maintenance space and heat dissipation and ventilation space must be reserved at the ESS installation location. The recommended space dimensions are as shown in the figure below.

-Single Unit

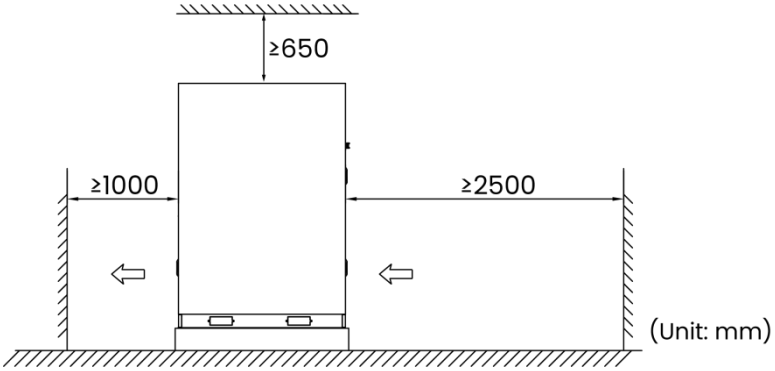

-Parallel Units

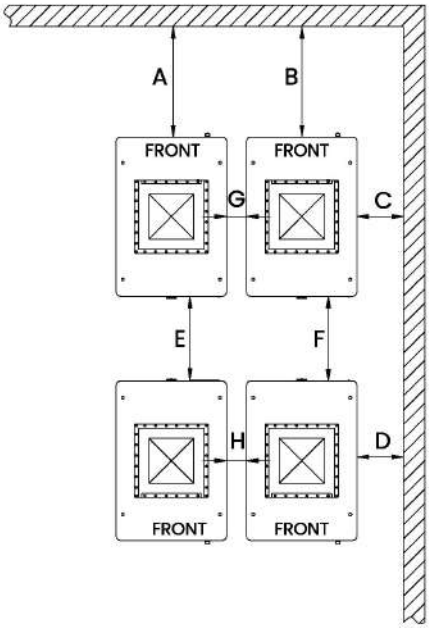

A=B≥2500mm, C=D≥10mm, E=F≥1000mm, G=H≥0mm

(3) Foundation Requirement

Items	Requirements
Base Surface	Be concrete or non-combustible, level, firm, and load-bearing. Constructed using corrosion-resistant concrete. Additional anti-corrosion coating treatment shall be applied where necessary.
Load Capacity	Designed for total equipment weight; if the weight exceeds 3t,

	reassess and reinforce the foundation accordingly.
Connections	Adjusted based on site conditions. On hard surfaces, secure using welding or bolting.
Water Protection	Keep base above highest historical water level. Designed with a drainage slope of ≥ 3% to prevent seawater backflow and water accumulation.

When building the foundation, you need to consider the ESS cable outlet and reserve trenches or cable entry holes. Please refer to the figure below for the installation hole location diagram.

☞	**Note!** The unit is not suitable for indoor installation. If indoor installation is necessary due to special requirements, local laws and regulations must be strictly followed. During installation, the indoor temperature should be strictly controlled at 55°C or below, and the ventilation between the room and the outside environment should be smooth to maintain good air circulation.

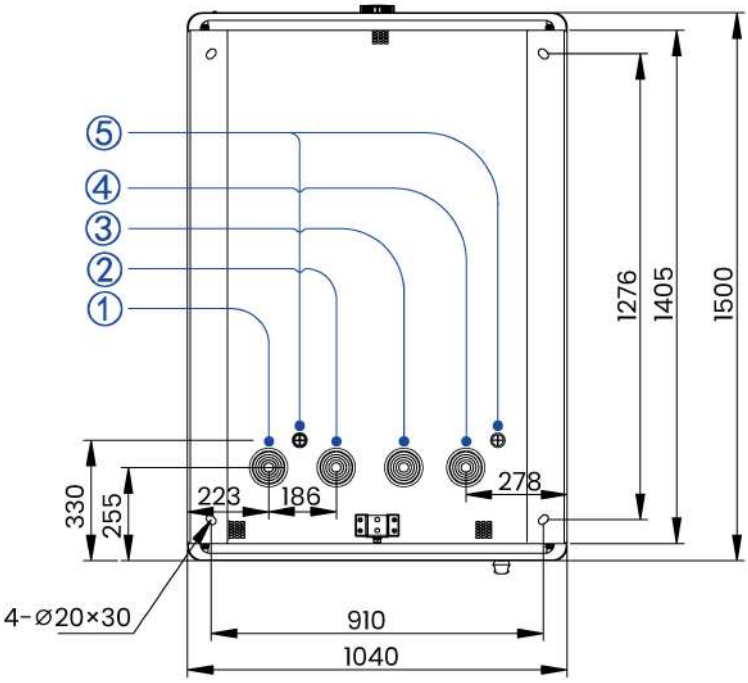

Installation Holes in the Bottom Plate (Top view) (unit: mm)

NO.	Name	Hole Diameter
①	PV cable outlet*	90mm
②	Load cable outlet	90mm
③	Grid cable outlet	90mm
④	GEN cable outlet	90mm
⑤	COM cable outlet	25mm

* For H version only

The following foundation drawings are for reference only.

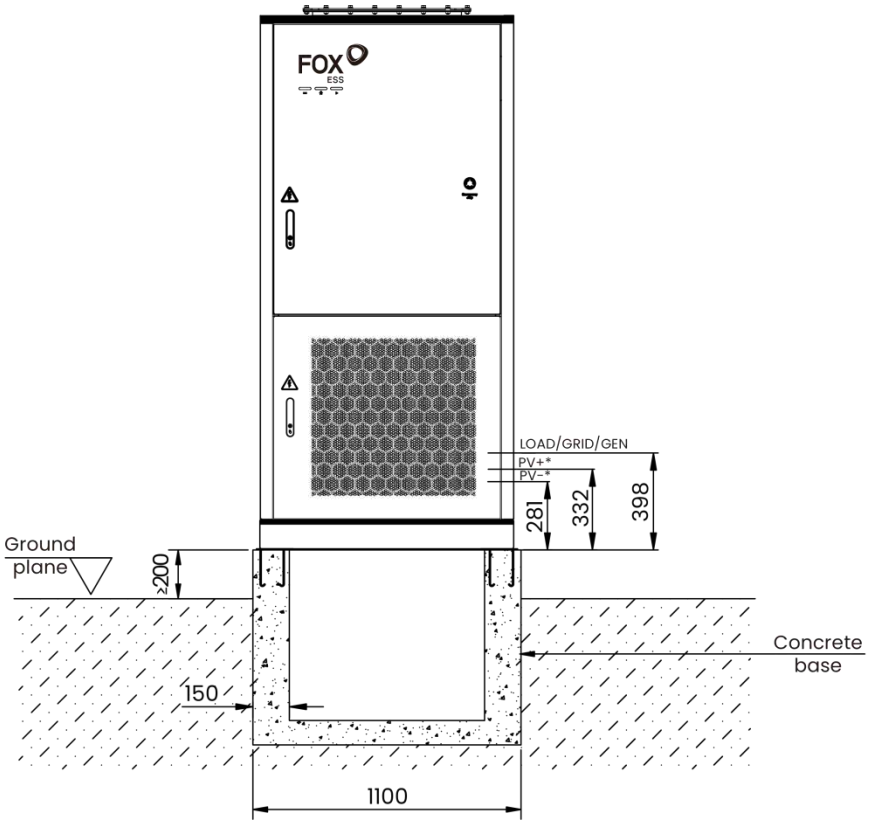

Mounting Base Section (Front View) (Unit: mm)

*For H version only.

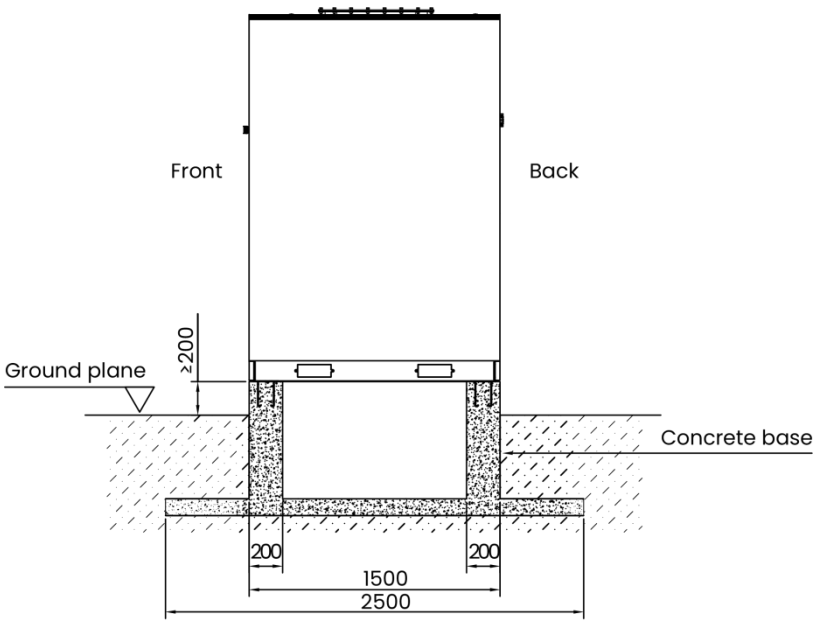

Mounting Base Section (Side View) (Unit: mm)

(4) Gutter Requirements

ESS adopts the bottom cable entry method. To prevent foreign objects from entering, there is no cable entry hole on the side of the ESS cabinet. The cables must be entered through the trench. Therefore, a trench must be preset on site. The trench has the

following requirements:

- Since ESS uses bottom cable entry, the trench must have necessary dust and rodent-proof design to prevent foreign objects from entering.
- The trench needs to have necessary waterproof and moisture-proof design to prevent the cables from aging and short-circuiting, which will affect the normal operation of ESS.
- Since ESS has a large power, the required cables are thicker, so the cross-sectional area of the cables must be fully considered when designing the trench.

6.4.3 Shell Ground

There are two methods for grounding the shell: welding and fixing with grounding flat steel or fixing with grounding cables (Screw torque 47 N.m). The location of the grounding point is as shown below:

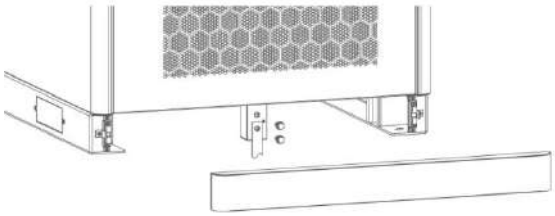

7. Electrical Connection

7.1 Safety Precautions

⚠	**Danger!** • Must ensure that cables are voltage-free with a measuring instrument before proceeding electrical connection. • Before electrical connections, please make sure that the unit switch and all switches connected to the unit are set to "OFF", otherwise electric shock may occur! • Do not close the AC circuit breaker until the electrical connection is completed.
⚠	**Warning!** • Install the external protective grounding cable or grounding flat steel first when performing electrical connection. • Please use measuring devices with an appropriate range. Overvoltage can damage the measuring device and cause personal injury.
☞	**Note!** • Electrical connection must be performed by professionals. • Operators must wear proper personal protective equipment during electrical connections. • All cables used in the PV generation system must be firmly attached, properly insulated, and adequately dimensioned. • Cables used by the user shall comply with the requirements of local laws and regulations.

7.2 DC Wiring

The PCS can be connected with at most 16 strings of PV modules. Please select suitable PV modules with high reliability and quality. Open circuit voltage of the module array connected should be less than 1000V, and operating voltage should be within the MPPT voltage range.

⚠	**Warning!** • Make sure the PV array is well insulated to ground before connecting it to the PCS. • Do not ground the positive or negative terminal of the PV cable. • The photovoltaic modules have high voltage. Please observe electrical safety rules when proceeding electrical connection. • Before connection, please check the positive and negative polarity of the PV string and make sure it is correct before inserting the DC connector into the corresponding DC terminal. • During the installation and operation of the unit, please ensure that the positive or negative electrodes of PV strings do not short-circuit to the ground. Otherwise, an AC or DC short-circuit may occur, resulting in equipment damage. The damage caused by this is not covered by the warranty. • Electric arc or contactor over-temperature may occur if the DC connectors are not firmly in place, and the loss caused is not

	covered by the warranty. • If the DC input cables are reversely connected or the positive and negative terminals of different MPPT are shorted to ground at the same time, while the DC SWITCH 1&2 are in the "ON" position, do not operate immediately. Otherwise, the PCS may be damaged. Please turn the DC SWITCH to "OFF" and remove the DC connector to adjust the polarity of the strings when the string current is lower than 0.5 A. • The PCS does not support full parallel connection of strings (Full parallel connection refers to a connection method in that strings are connected in parallel and then connected to the PCS separately). • Do not connect one PV string to multiple units. Otherwise, the units may be damaged.
☞	**Note!** • Section "**7.2 DC Wiring**" applies to the H version only. • PV modules-please ensure they are the same type, have the same output and specifications, are aligned identically, and are tilted to the same angle. In order to save cable and reduce DC loss, we recommend installing the unit as near to the PV modules as possible. • Mixed use of PV modules of different brands or models in one MPPT circuit, or PV modules of different orientation or inclination in a string may not damage unit, but will cause system bad performance! • The PCS enters standby state when the input voltage ranges between 950 V and 1,000 V. The PCS returns to running state once the voltage returns to the MPPT operating voltage range, namely, 200 V to 950 V. • The axial tension on DC connectors must not exceed 80N. Avoid axial cable stress on the connector for a long time during field wiring. • Radial stress or torque must not be generated on PV connectors. It may cause the connector waterproof failure and reduce connector reliability. • Leave at least 50 mm of slack to avoid the external force generated by the cable bending affecting the waterproof performance. • Refer to the specifications provided by the cable manufacturer for the minimum cable bending radius. If the required bending radius is less than 50 mm, reserve a bending radius of 50 mm. If the required bending radius is greater than 50 mm, reserve the required minimum bending radius during wiring.

7.2.1 PV Configuration

- As shown in the figure below, the inverter provides multiple PV inputs. Two PV inputs shares one MPP tracker (MPPT). Specifically, PV1 and PV2 share one MPPT, and PV3 and PV4 share another.
- Each MPPT operates independently, allowing different PV string configurations among MPPT groups, including PV module type, number of modules per string, tilt angle, and installation orientation.
- For optimal system performance, the PV strings connected to the same MPPT (e.g., PV1 and PV2, or PV3 and PV4) should have identical configurations, including module type, number of modules, tilt angle, and installation orientation.

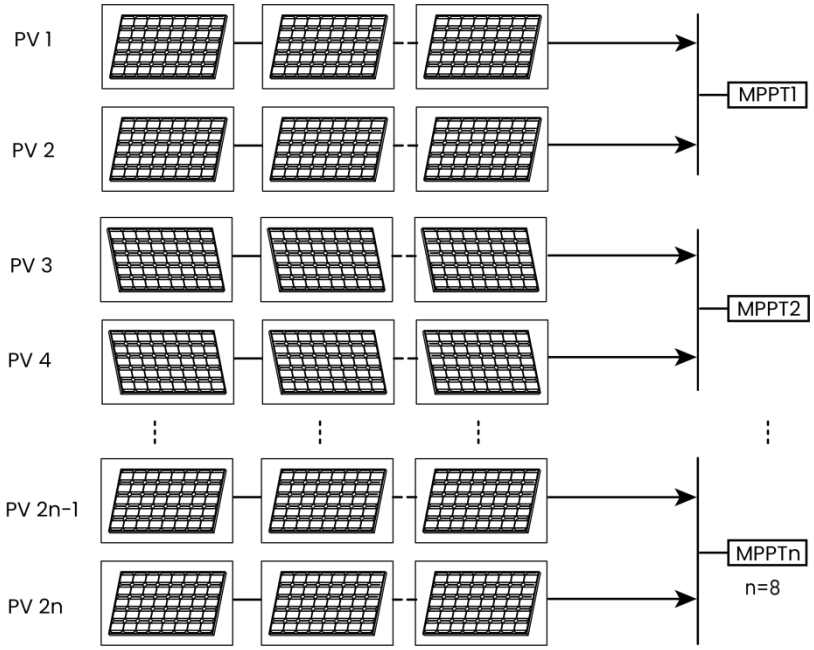

DC Input Terminals Diagram is shown as below:

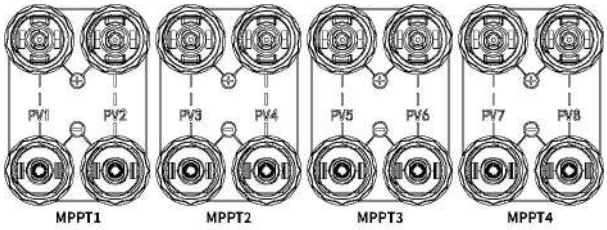

TM241kWh-49kW-H TM241kWh-50kW-H TM241kWh-60kW-H

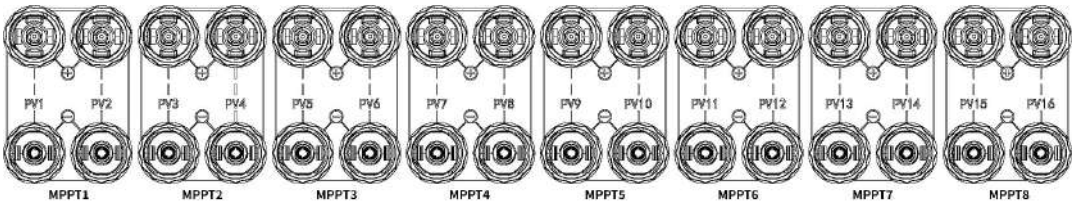

TM241kWh-80kW-H TM241kWh-99kW-H TM241kWh-100kW-H TM241kWh-124kW-H TM241kWh-125kW-H

If the MPPTs are not fully connected, please connect the corresponding strings with reference to the tables below.

TM241kWh-49kW-H TM241kWh-50kW-H TM241kWh-60kW-H	
Number of Input Strings	**Terminals**
1	PV7
2	PV5, PV7
3	PV3, PV5, PV7
4	PV1, PV3, PV5, PV7
5	PV1, PV3, PV5, PV7, PV8
6	PV1, PV3, PV5, PV6, PV7, PV8
7	PV1, PV3, PV4, PV5, PV6, PV7, PV8

8	PV1, PV2, PV3, PV4, PV5, PV6, PV7, PV8

TM241kWh-80kW-H TM241kWh-99kW-H TM241kWh-100kW-H TM241kWh-124kW-H TM241kWh-125kW-H	
Number of Input Strings	**Terminals**
1	PV7
2	PV7, PV15
3	PV5, PV7, PV15
4	PV5, PV7, PV13, PV15
5	PV3, PV5, PV7, PV13, PV15
6	PV3, PV5, PV7, PV11, PV13, PV15
7	PV1, PV3, PV5, PV7, PV11, PV13, PV15
8	PV1, PV3, PV5, PV7, PV9, PV11, PV13, PV15
9	PV1, PV3, PV5, PV7, PV8, PV9, PV11, PV13, PV15
10	PV1, PV3, PV5, PV7, PV8, PV9, PV11, PV13, PV15, PV16
11	PV1, PV3, PV5, PV6, PV7, PV8, PV9, PV11, PV13, PV15, PV16
12	PV1, PV3, PV5, PV6, PV7, PV8, PV9, PV11, PV13, PV14, PV15, PV16
13	PV1, PV3, PV4, PV5, PV6, PV7, PV8, PV9, PV11, PV13, PV14, PV15, PV16
14	PV1, PV3, PV4, PV5, PV6, PV7, PV8, PV9, PV11, PV12, PV13, PV14, PV15, PV16
15	PV1, PV2, PV3, PV4, PV5, PV6, PV7, PV8, PV9, PV11, PV12, PV13, PV14, PV15, PV16
16	PV1, PV2, PV3, PV4, PV5, PV6, PV7, PV8, PV9, PV10, PV11, PV12, PV13, PV14, PV15, PV16

7.2.2 Assembling DC Connectors

1. Turn off **DC SWITCH 1** and **DC SWITCH 2**.

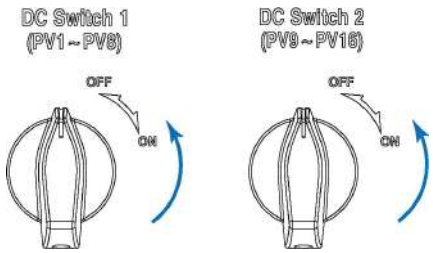

2. Strip the photovoltaic cables for terminal installation.

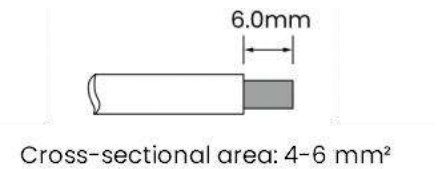

3. Prepare the terminals to be fitted onto the cables.

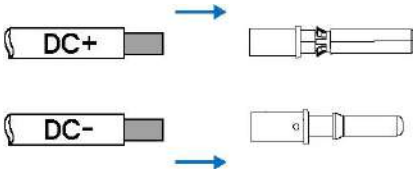

4. Use the appropriate tool to perform terminal crimping.

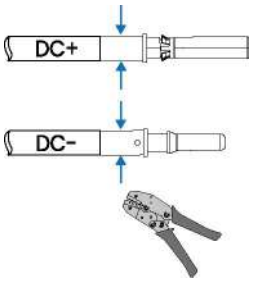

5. Assemble the positive and negative terminals.

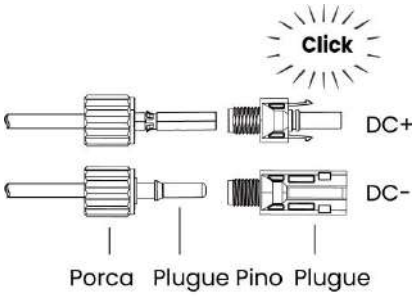

6. Tighten the fixing nut and seal the terminals.

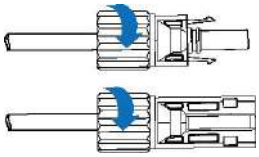

7. Finally, connect the photovoltaic cables to the PV input terminals of the unit.

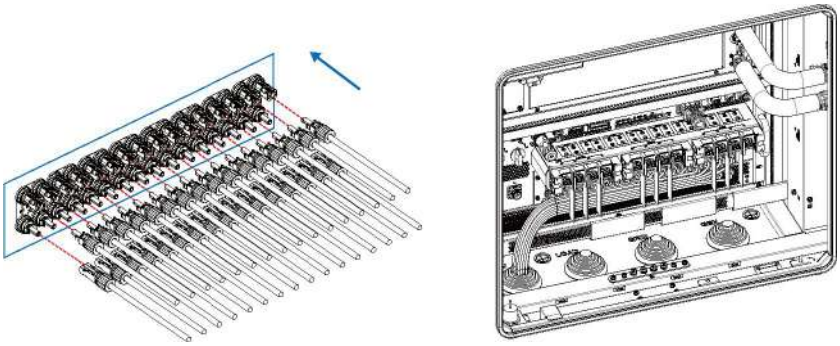

	Note! • Use MC4 DC terminals. • To ensure the reliability of the DC cable connection and the stable operation of the machine, it is essential to use the matching DC connector. • The multimeter must have a DC voltage range of at least 1000 V. If the voltage is a negative value, the DC input polarity is incorrect. Please correct the DC input polarity. If the voltage is greater than 950 V, too many PV modules are configured to the same string. Please remove some PV modules.

7.3 AC Wiring

7.3.1 AC Wiring Requirements

	Note! Only with the permission of the local grid department, the unit can be connected to the grid.

AC Circuit Breaker

A separate three-pole or four-pole circuit breaker should be installed on the external AC side of each unit to ensure safe disconnection from the grid.

Model (kW)	49	50	60	80	99	100	124	125
Copper Cable (mm²)	25–150	25–150	35-150	50-150	70-150	70-150	95-150	95-150
Aluminum Cable (mm²)	35-150	35-150	50-150	70-150	95-150	95-150	120-150	120-150

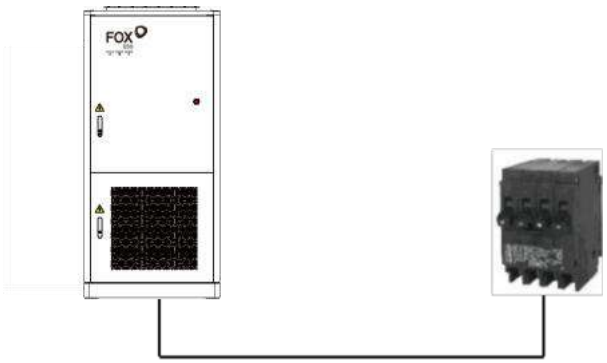

	Warning! • AC circuit breakers should be installed on the AC side of the unit and the grid side to ensure safe disconnection from the grid. • Multiple units cannot share one AC circuit breaker.

	• The AC circuit breaker shall be selected according to the actual cable size, and its rated current shall not exceed the maximum allowable current-carrying capacity of the cable. • Cable sizes shall be selected based on actual site conditions. If local electrical regulations impose special requirements on cable specifications, the local regulations shall prevail.
☞	**Note!** • If the impact load (e.g., motor) power exceeds 30 kW, or the required inrush current exceeds 700 A, a soft-start device (such as a variable frequency drive) needs to be installed.

7.3.2 Wiring Steps

Check the grid voltage and compare with the permitted voltage range (refer to technical parameters).
Disconnect the circuit-breaker of all the phases and secure against re-connection.
Preparation: Trim the cables (Recommends multi-core copper cables and waterproof single-core flexible copper cables)

Cable Type	Outer Diameter (mm)	Copper Conductor Sectional Area (mm^2)
LOAD/GRID/GEN	40–70	L1, L2, L3, (N) cables: 90–150 PE: S/2 (S is a sectional area of LOAD/GRID/GEN phase cable)

*Please refer to local cable type and color for actual installation

1. Strip the AC power cables for terminal installation.

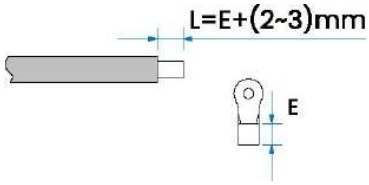

2. Prepare the ring terminal and heat shrink tubing.

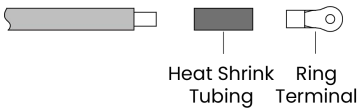

3. Crimp the terminal onto the AC power cables.

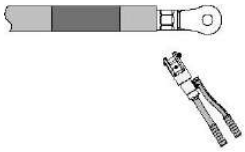

4. Apply heat shrink tubing to the wiring.

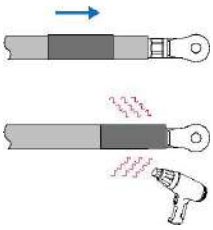

5. Connect the AC cables to the unit's input terminals.

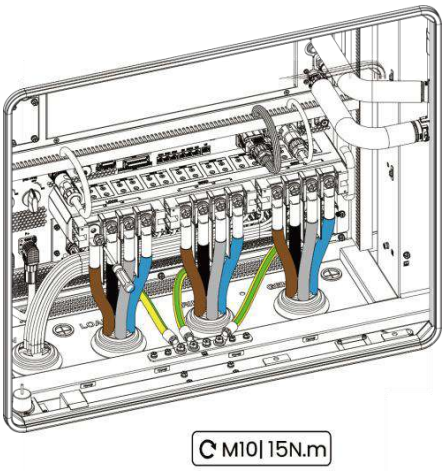

6. Finally, install the transparent protective cover for AC terminals.

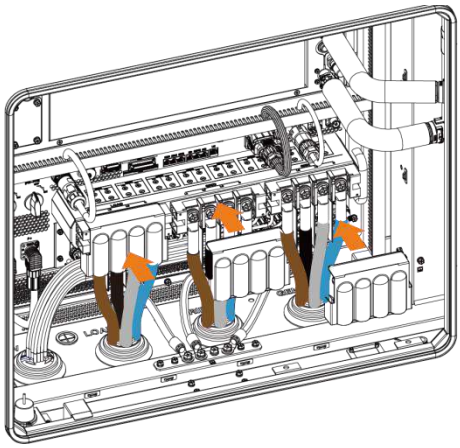

7.4 Ground Wiring

The conductor sectional area of the ground cable is 25-50 mm^2 (30-35 mm^2 is recommended).

-Steps

1. Strip the grounding cables for terminal installation.

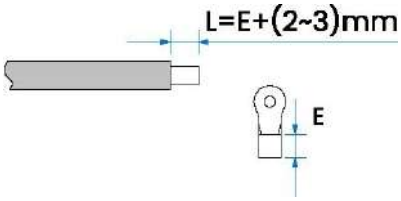

2. Prepare the ring terminal and heat shrink tubing.

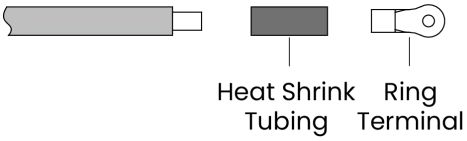

3. Crimp the ring terminal onto the grounding cables.

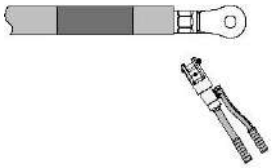

4. Apply the heat shrink tubing to the wiring.

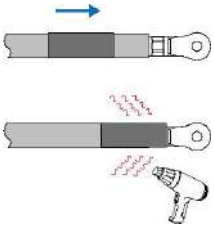

5. Finally, connect the grounding cables to the unit's grounding terminals.

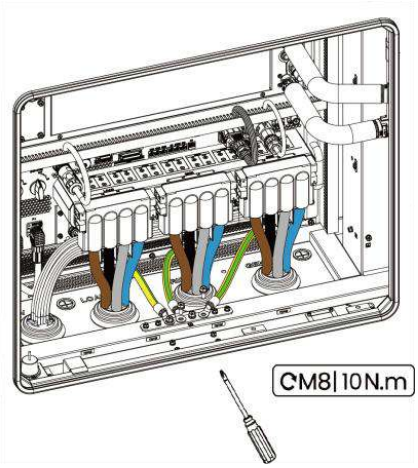

7.5 EPS Ground Connection

The conductor section area of the ground cable is 15-25 mm^2.

-Steps

1. Assemble the EPS grounding connector onto the unit's grounding cable.

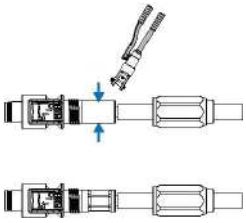

2. Secure the EPS grounding connector.

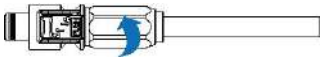

3. Connect the grounding cable to the unit's EPS terminal.

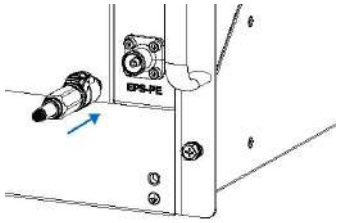

Scenario 1

The N and PE cables need to be connected together in the service panel.
For Countries such as Australia, New Zealand, South Africa, etc., please follow local wiring regulations.

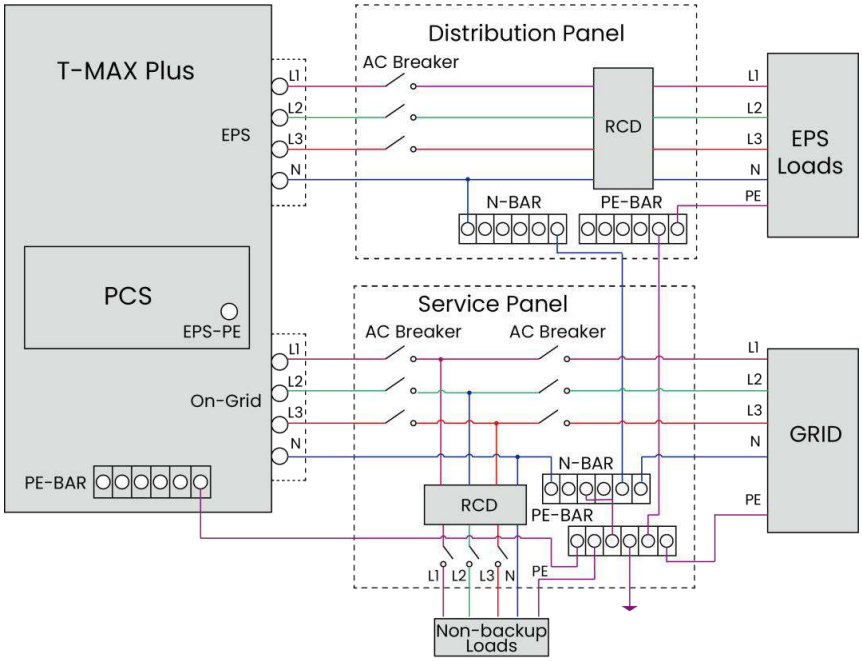

Scenario 2

The neutral is separated from the PE in the service panel.

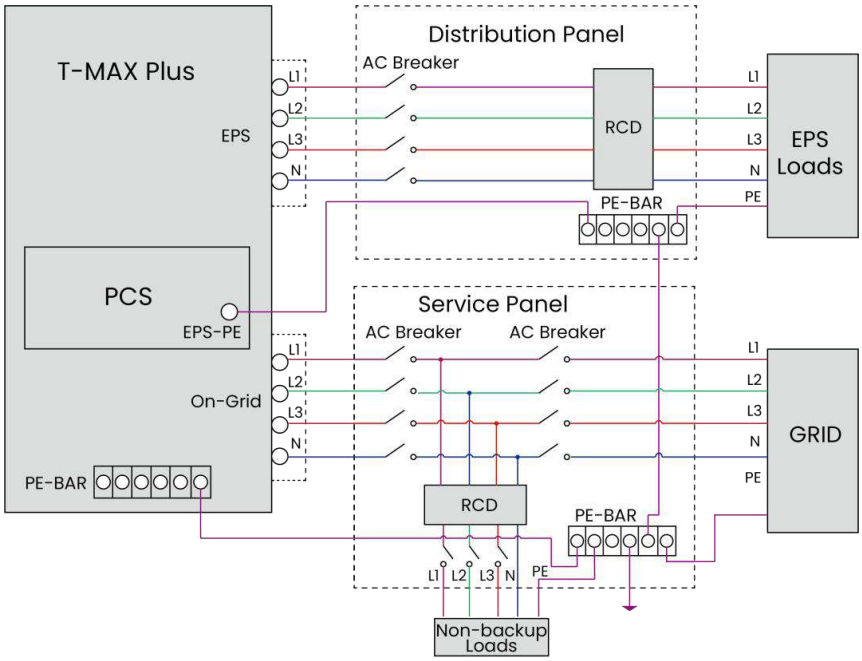

7.6 Meter Connection

-DC Couple

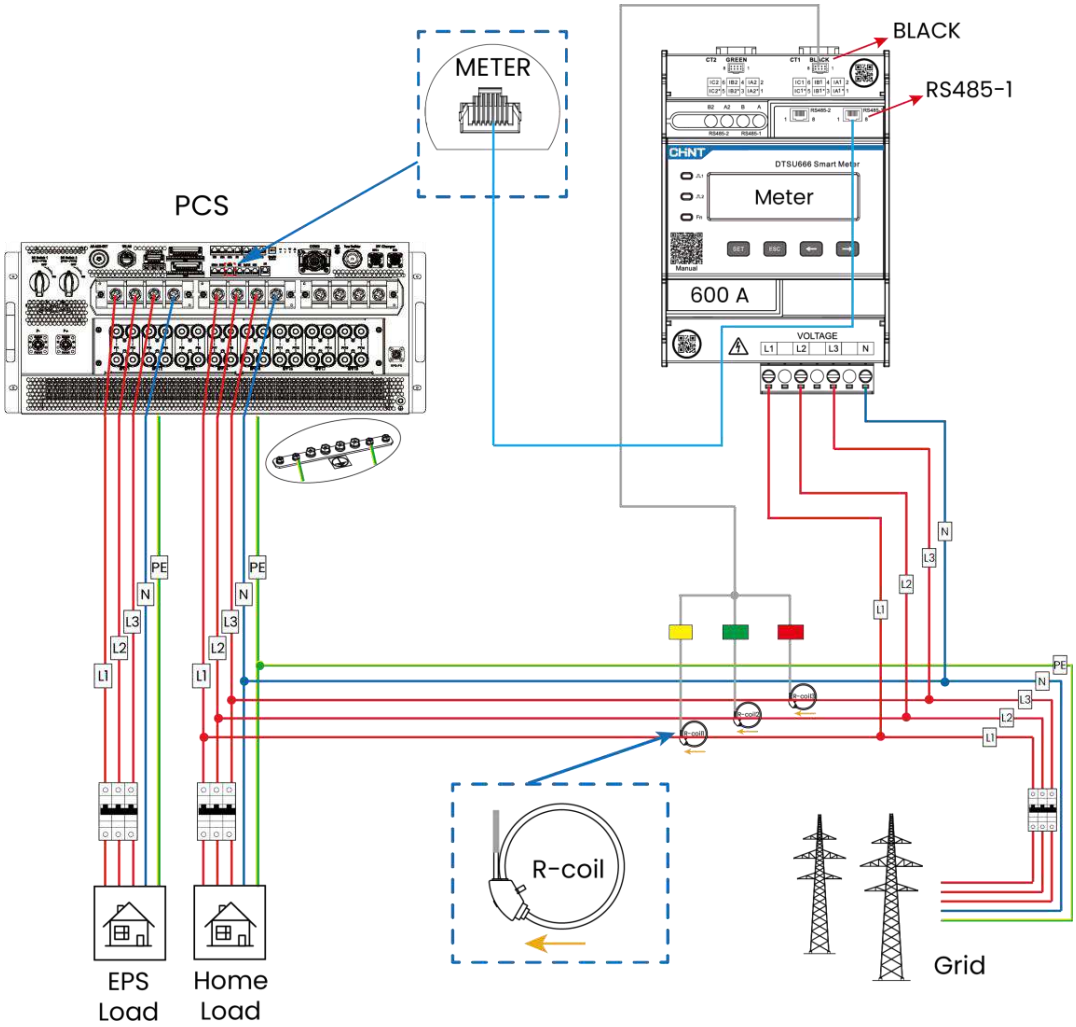

	Note! The unit is equipped with a CHNT smart meter, which must only be used with the R-coil supplied in the accessory kit. Do not use R-coils of other models, as this may result in operational failure.

-AC Couple

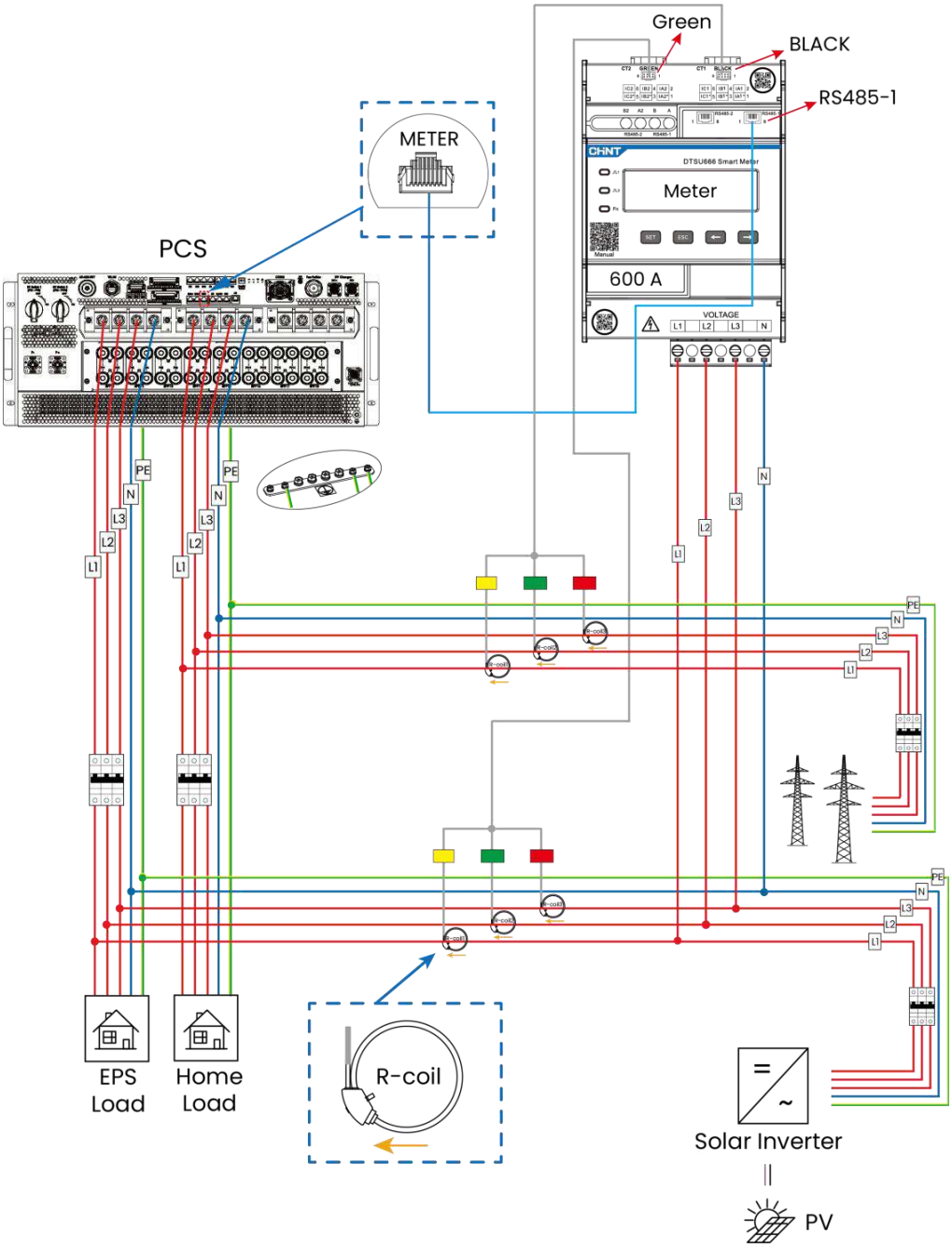

	Note! • If the unit is connected to a diesel generator, grid-tied inverters shall not be connected to the load port.

- Communication Connection:
  - ➢ Connect the meter to the PCS using an RJ45 communication cable.
  - ➢ Ensure the communication cable follows the specified pin-out sequence to guarantee reliable data transmission.
- Power Connection:
  - ➢ Connect the grid/solar power lines (L1, L2, L3, N, PE) to the corresponding input

terminals on the PCS.

- Connect the EPS LOAD (emergency load) power lines (L1, L2, L3, N, PE) to the designated EPS terminals on the PCS.
- Ensure that the AC output lines from the PCS are properly matched with the utility grid and load wiring.

- R-coil (Rogowski coil) Connection:
  - Install R-coils to monitor real-time current flow.
  - The R-coil connection leads are routed to the meter, ensuring correct phase sequence and orientation.
  - Arrows on R-coils should point toward the load side.
- Grounding:
  - PE (Protective Earth) wires must be securely connected.
  - Proper grounding ensures system safety and compliance with electrical standards.
- Wiring Precautions:
  - Confirm all wiring connections are tight and well-insulated before powering on the system.
  - Double-check phase alignment (L1, L2, L3) between the meter, PCS, and the utility grid.
  - Ensure that the communication cable is properly shielded to avoid interference.
  - Use appropriately sized cables according to system current ratings.

7.7 Parallel Connection

☞	**Note!** • The sum of the cable lengths from each unit to the grid (or generator) and the load shall be identical. • The cable diameters of a1, b1, a2, b2,..., aN, bN shall be the same.

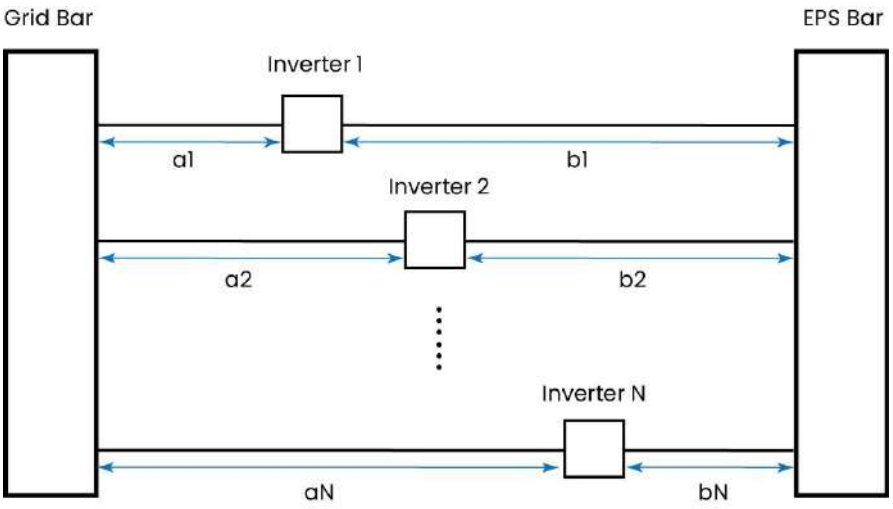

a1 + b1 = a2 + b2 = ... = aN + bN

7.7.1 Parallel Systems

Scenario 1: Grid Tied Parallel System

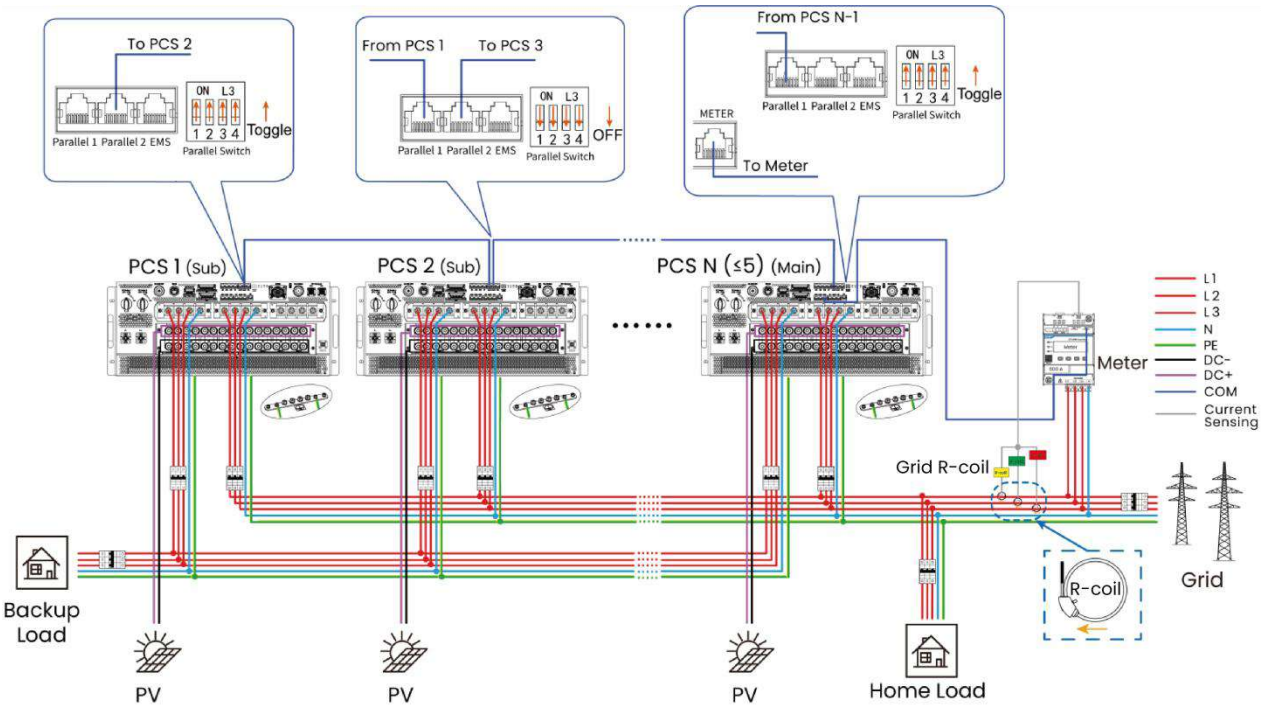

- **Connect the meter and R-coil according to "7.6 Meter Connection". And the communication cable of the meter should be connected to the main unit's METER port**.
- Please use twisted-pair network cable as the communication cable.
- Turn on the Parallel Switches on the first and last units. Leave the Parallel Switches on all other units in the default OFF state.
- Configure the parameters according to "**7.7.3 Parallel Parameters Configuration**".
- Please connect to a reliable network to ensure the units are online.
- In parallel systems, if one of them is started up, all other units paralleled with it may also be started up.
- 1) For 2 units in a parallel system, use the meter and 600A R-coil included in the accessory kit.
  2) For 3+ units in a parallel system, use the 3000A rated meter and 3000A R-coil. Contact Fox ESS to obtain these components.
  3) Do not mix components or use third-party R-coils. Meters and R-coils must have matching current and ratings.
- When 6–10 units are paralleled, the wiring becomes more complex. For details, please consult our technicians.
- Power on the units according to "**9.3 ESS Start-Up**".

Scenario 2: Generator Tied Parallel System

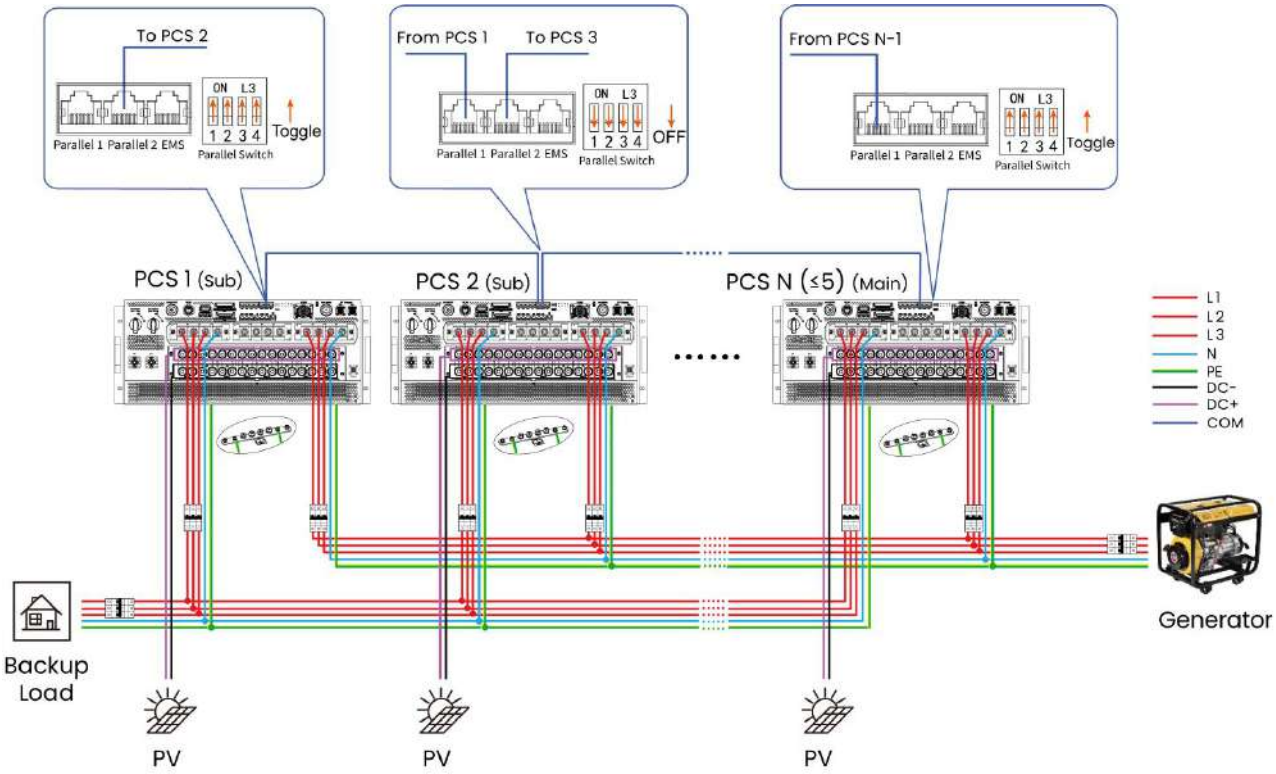

- Connect the generator according to "**8.2.1 Generator Wiring**". And the signal line for controlling the generator should be connected to the main inverter.
- Please use twisted-pair network cable as the communication cable.
- Turn on the Parallel Switches on the first and last units. Leave the Parallel Switches on all other units in the default OFF state.
- Configure the parameters according to "**7.7.3 Parallel Parameters Configuration**".
- Please connect to a reliable network to ensure the units are online.
- In parallel systems, if one of them is started up, all other units paralleled with it may also be started up.
- When 6–10 units are paralleled, the wiring becomes more complex. For details, please consult our technicians.
- Power on the units according to "**9.3 ESS Start-Up**".

Scenario 3: Grid & Generator Tied Parallel System

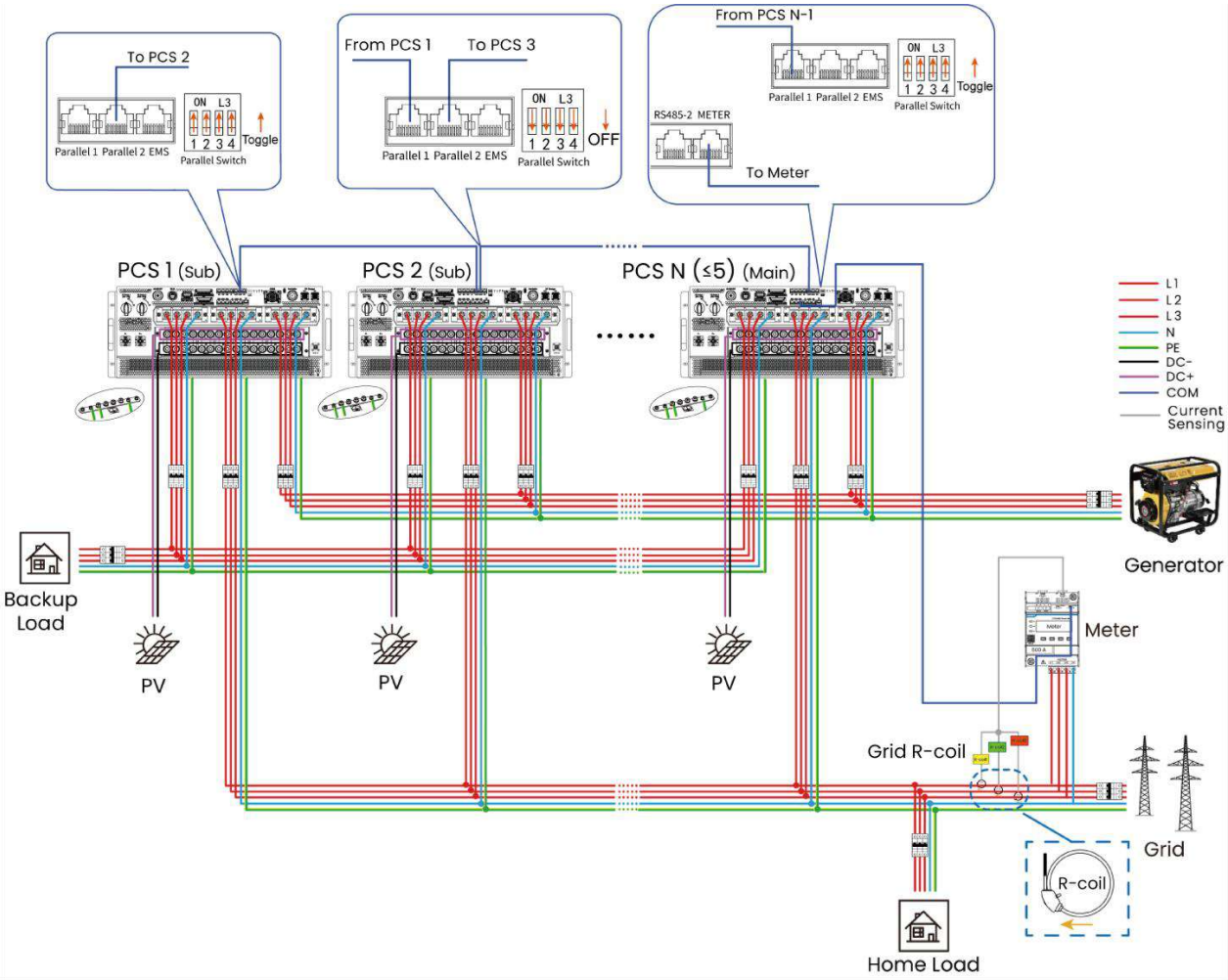

- **Connect the meter and R-coil according to "7.6 Meter Connection". And the communication cable of the meter should be connected to the main unit's METER port**.
- Connect the generator according to "**8.2.1 Generator Wiring**". And the signal line for controlling the generator should be connected to the main inverter.
- Please use twisted-pair network cable as the communication cable.
- Turn on the Parallel Switches on the first and last units. Leave the Parallel Switches on all other units in the default OFF state.
- Configure the parameters according to "**7.7.3 Parallel Parameters Configuration**".
- Please connect to a reliable network to ensure the units are online.
- In parallel systems, if one of them is started up, all other units paralleled with it may also be started up.
- 1) For 2 units in a parallel system, use the meter and 600A R-coil included in the accessory kit.

  2) For 3+ units in a parallel system, use the 3000A rated meter and 3000A R-coil. Contact Fox ESS to obtain these components.

  3) Do not mix components or use third-party R-coils. Meters and R-coils must have matching current and ratings.
- When 6–10 units are paralleled, the wiring becomes more complex. For details, please consult our technicians.
- Power on the units according to "**9.3 ESS Start-Up**".

7.7.2 Switch Parallel Connection

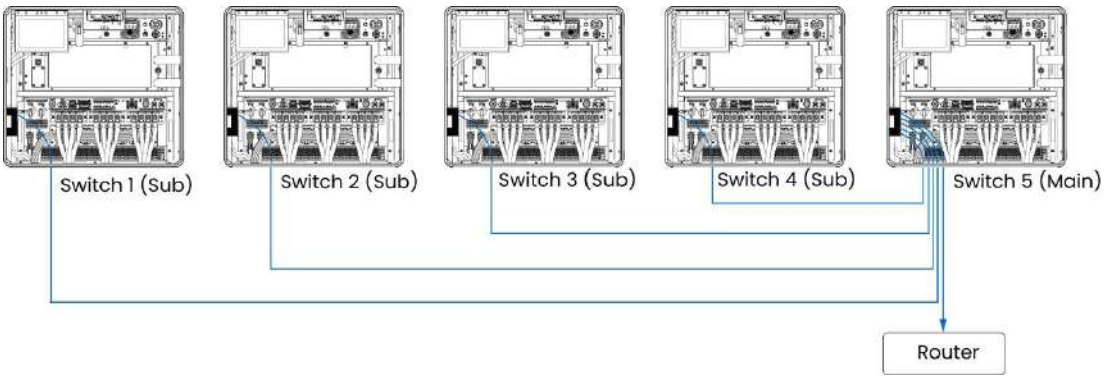

7.7.3 Parallel Parameters Configuration

Step 1: After all wiring operations are completed, install the MSD to start the parallel units.

1. Plug the MSD socket into the battery and turn the wrench to the 90-degree position.

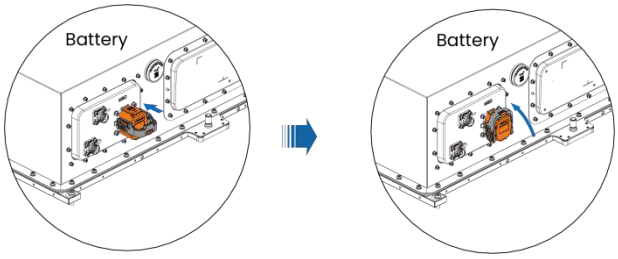

2. Push the CPA to the locking position.

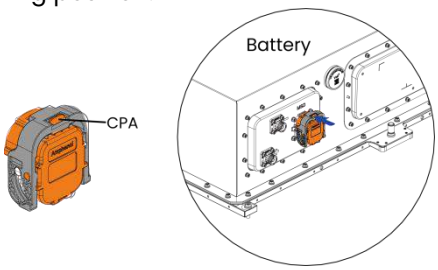

Step 2: Start the system.

1. Turn on the **BAT SWITCH**, **LIQUID** switch, and **TR(24V)** switch.

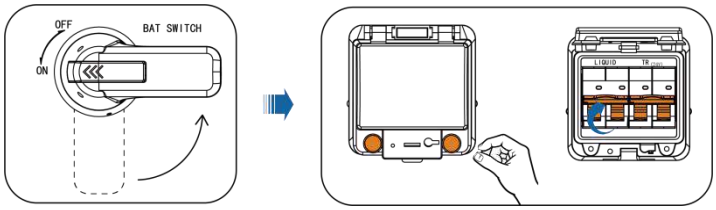

2. (Case 1) **Normal Mode**: When there is PV and grid access,
   - Turn on the **DC Switch 1***, **DC Switch 2***, **AC Grid Switch**, and **Load Switch**.

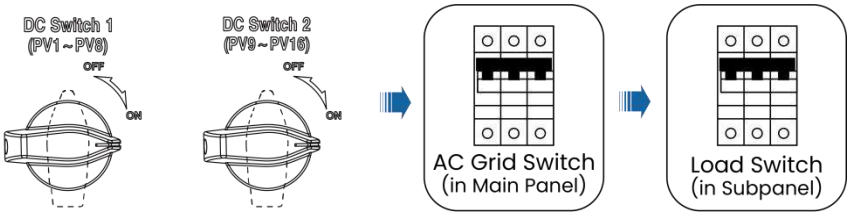

* DC Switch 1 and DC Switch 2 are available for the H version only.

(Case 2) **Black Start**: When there is no PV and grid access,

- Press and hold the battery **POWER** button for 3 seconds, and then release.
- Press the battery **POWER** button for 3 times within 4 seconds (completed within 30 seconds of the previous step).

POWER

⚠	**Warning!** Do not turn on the **DC Switch 1*** and **DC Switch 2*** while the unit is running. Otherwise, it may cause a system failure.

Step 3: Log in to the EMS.

1. Open the LCD screen of the unit.

2. Log in with your account and password. Default account and password: "admin" and "admin1".

Step 4: Complete the Startup Wizard on each unit.

☞	**Note!** • The Startup Wizard must be executed on each unit individually.

1. The startup wizard starts with the language selection interface. Follow the on-screen prompts to finish the configuration.

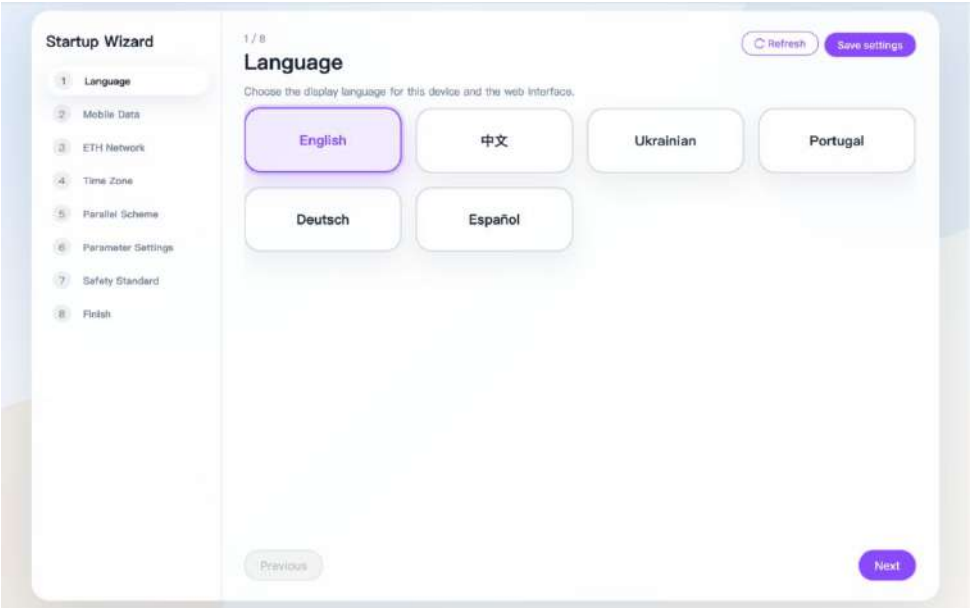

2. In "**Parallel Scheme**" interface, select an appropriate parallel mode according the actual conditions.

- For a single-unit system, select "**Direct**".
- For a multi-unit system, select "**Mega Kit**" when a Mega Kit is installed; select "**Mega Link**" when a Mega Link is installed; otherwise, select "**Direct**".

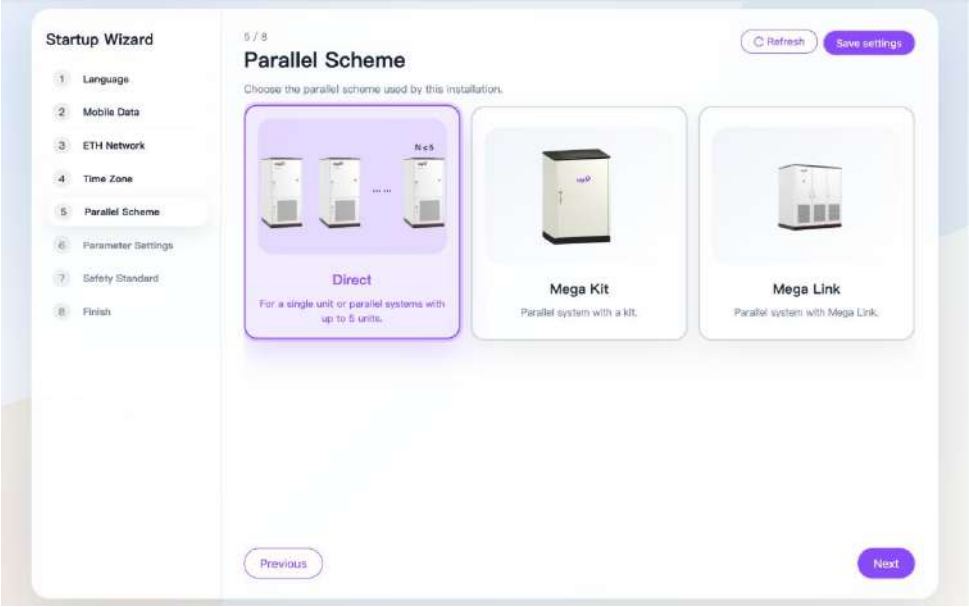

Step 5: Open the LCD screen of the main unit and set the Parallel Parameters.

1. Select "**Settings**" → "**Parallel Configuration**".
2. Click "**Confirmed, enter parallel configuration**".

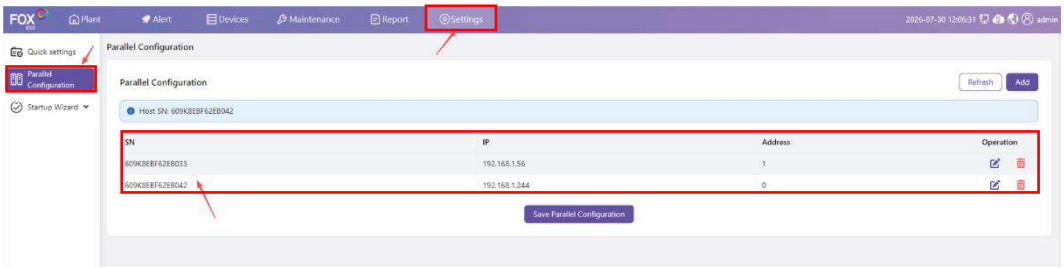

3. Verify that all unit SNs are displayed on the interface. If any SN is missing, inspect Ethernet cable connections and re-establish communication. If all SNs are shown normally, directly click "**Save Parallel Configuration**".

8. Main Function Implementation

8.1 Reactive Function Setting

Step 1: Log in to the Fox ESS official website.

1. Open the browser.
2. Enter the Fox ESS official website "https://www.foxesscloud.com/v2/login".
3. Log in with your account and password.

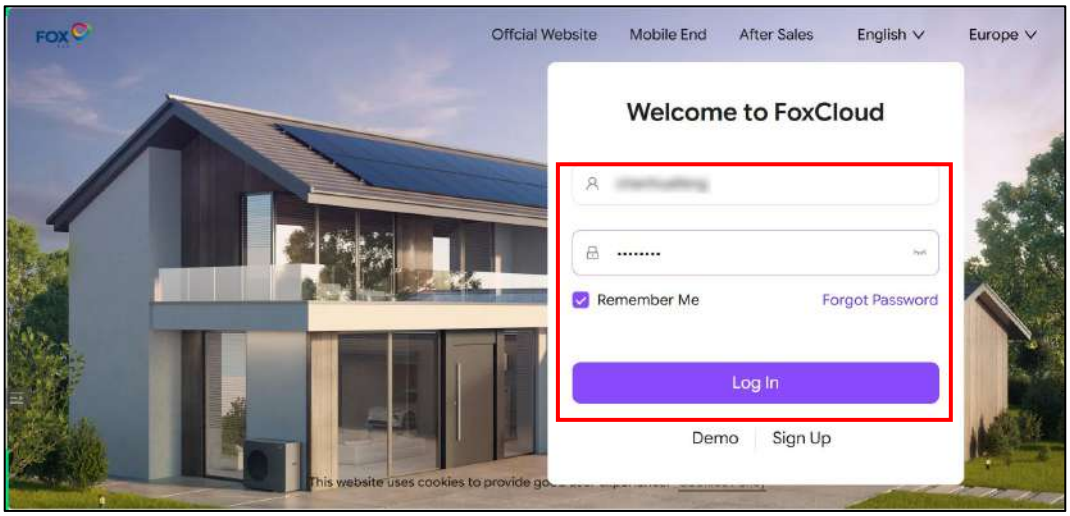

	Note! You can select preferred languages in the upper right corner.

Step 2: Enter the "Plants" Interface.

1. Input the SN code of the inverter in the search box, and click " 🔍 " to find the inverter in need of operation.
2. Click the plant name.

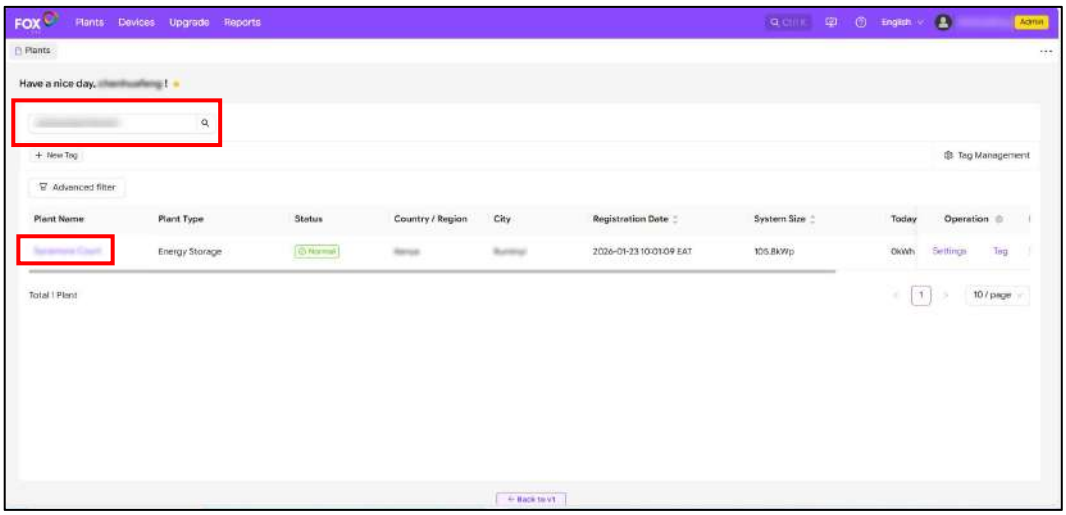

3. Click “Quick settings”.

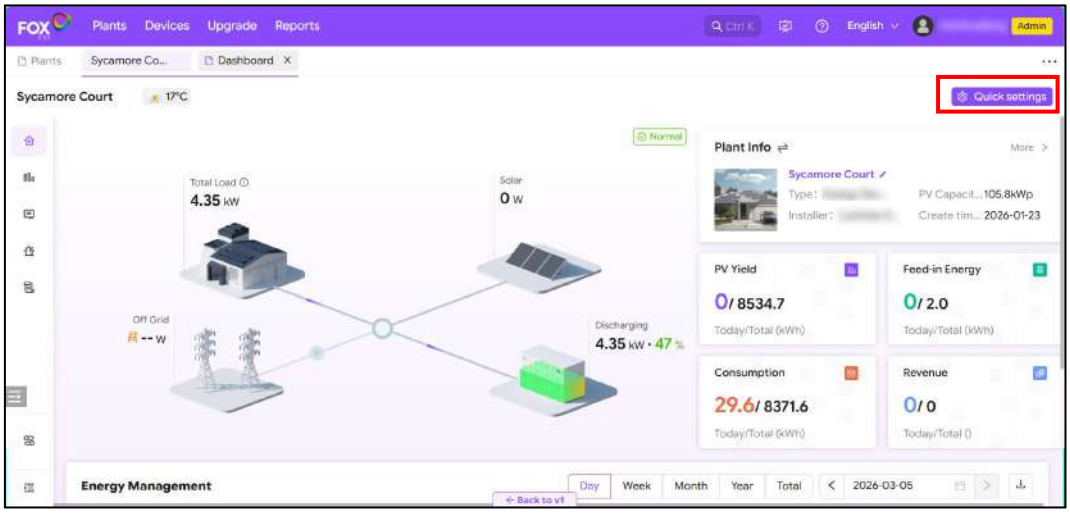

Step 3: Set the Power Factor Parameters.

1. Click”Advanced Settings”—“PowerFactor”.
2. Ensure “PowerFactorEnable(WInj)Enable” and “SetReactivePowerEnable”are enabled.
3. Click “Edit” and configure the “LimitMaxPowerValue” as needed. The default value is 100, and the allowable range is from 0 to 2000.
4. Configure the “ReactivePowerValue(Vars)” as needed. The default value is 0.0, and the allowable range is from -2000 to 2000.
5. Click “Save”.

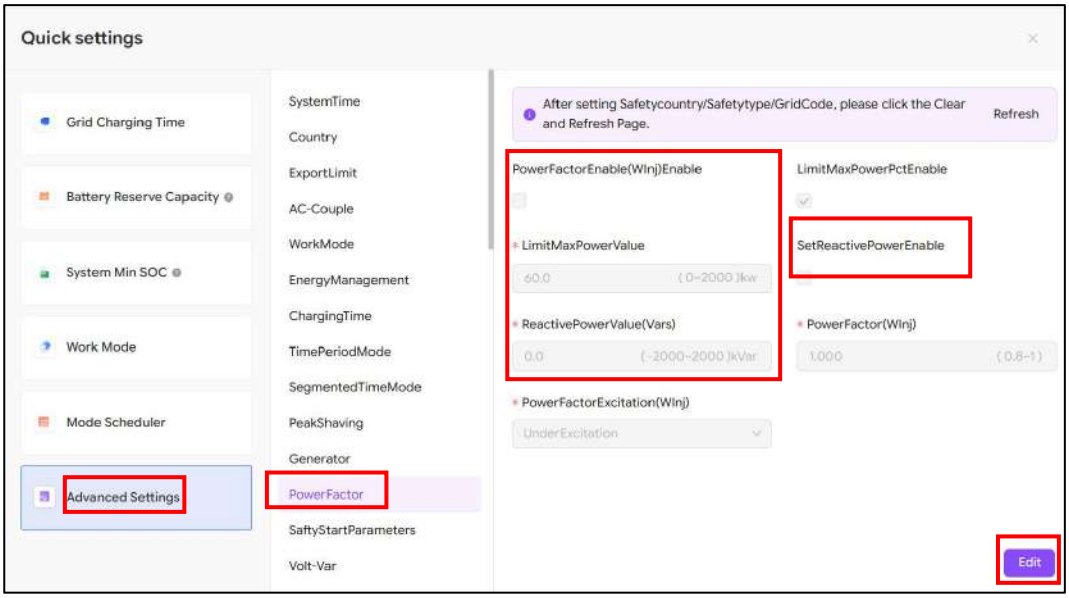

8.2 Diesel Generator

8.2.1 Generator Wiring

The following diagram illustrates the standard wiring method for integrating a diesel generator with the unit. This connection enables the unit to automatically start the generator when the grid is unavailable and the battery SOC is below the preset threshold.

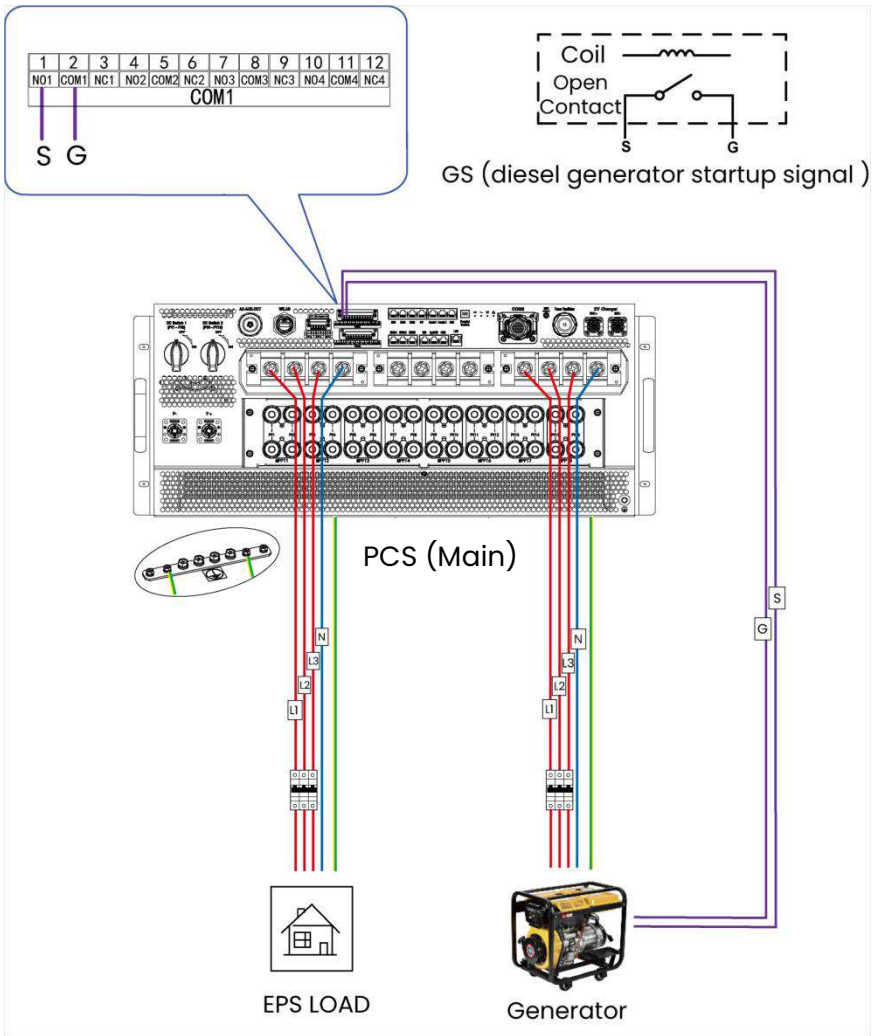

- Generator Start Signal Interface:
  - The PCS provides a dry contact output interface located on the internal terminal block (e.g., port NO1, Port COM1).
  - When conditions for generator startup are met, the PCS closes this contact to trigger the generator start command.
- Automatic Generator Control (AGS): The system supports AGS functionality, ensuring the generator starts and stops automatically based on battery SOC, load demand, and grid availability.
- Load and Output Management: When the generator is active, the ESS can either bypass generator power directly to the load or charge the battery, depending on system configuration.

	Note! • Ensure the generator has proper grounding and meets local electrical standards. • Overcurrent protection and surge protection devices (SPDs) must be installed at the generator output side.

8.2.2 Parameters Configuration

Step 1: Sign in on the Fox ESS official website.

1. Open the browser.
2. Enter the Fox ESS official website "https://www.foxesscloud.com/v2/login".
3. Sign in with your account and password.

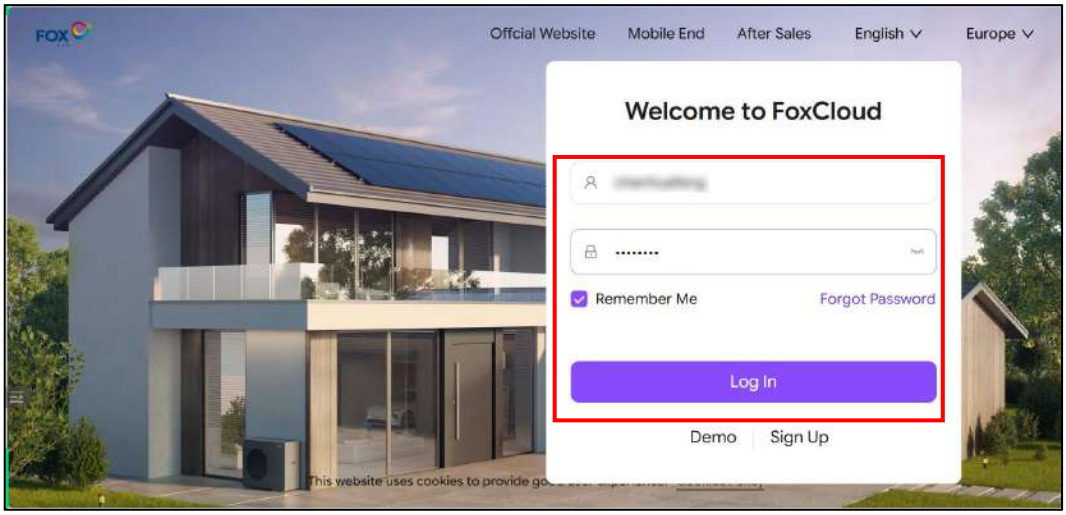

	Note! You can select preferred languages in the upper right corner.

Step 2: Enter the "Plants" Interface.

1. Input the SN code of the inverter in the search box, and click " 🔍 " to find the inverter in need of operation.
2. Click the plant name.

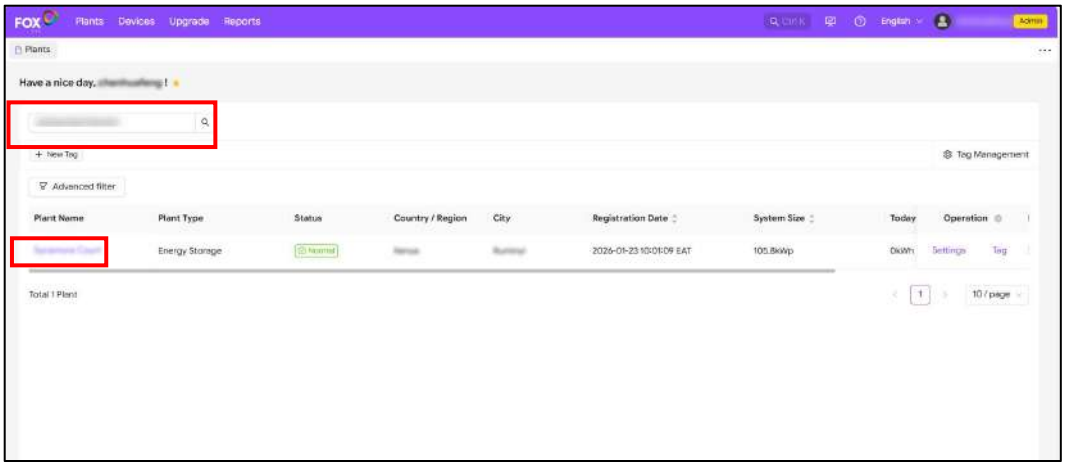

3. Click “Quick settings”.

Step 3: Set the Generator Parameters.

1. Click ”Advanced Settings”—“Generator”.
2. Click “Edit” and configure ”GeneratorRatedPower” according to the power of the on-site generator.
3. Configure “ChargePower” as needed. (This value must not exceed the maximum power of the inverter.)
4. Configure “SoCLowerLimit” as needed. The default value is 30 and the allowable range is from 10 to 100. (The diesel generator will start automatically when the battery SOC falls below the lower limit.)
5. Configure “SoCUpperLimit” as needed. The default value is 95 and the allowable range is from 40 to 100. (The diesel generator will stop automatically when the battery SOC rises above the upper limit.)
6. Configure ”GenPowerLowerLimit” as needed. The default value is 50% which is the lower limit of the optimal operation power for the Generator.
7. Configure ”GenPowerUpperLimit” as needed. The default value is 80% which is the upper limit of the optimal operation power for the Generator.
8. Click “Save”.

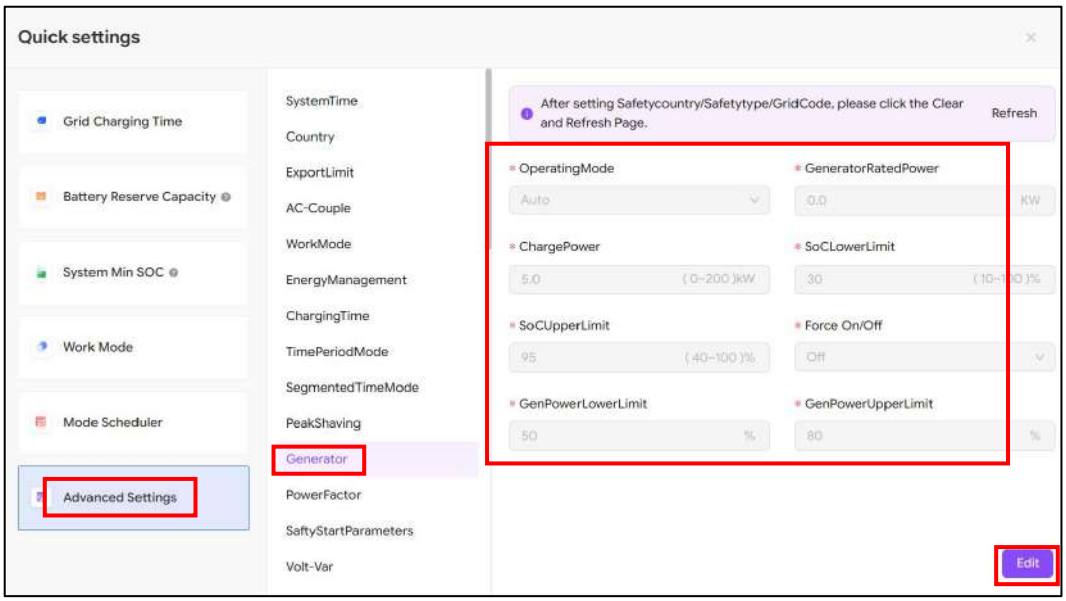

9. Commissioning

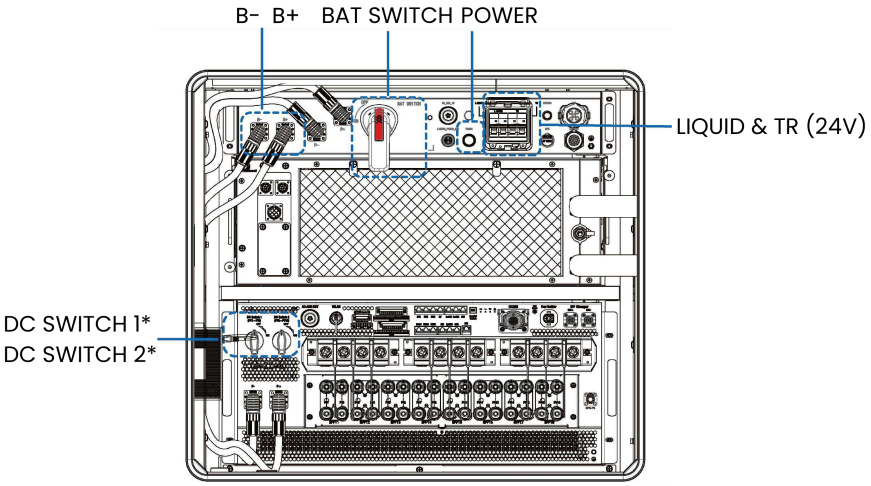

Internal Diagram of the Lower Enclosure Box

*For H version only

9.1 Inspection before Commissioning

Before powering on, please check the following items carefully to ensure they are correct.

- Check whether the positive and negative terminal connections of the battery PACK and the PCS power cable connections are correct.
- Check that the battery PACK, PCS, battery wiring cabinet power loop wiring and all connector plugs and sockets are not loose.
- Check that the battery PACK, PCS, power distribution box, battery power supply cabinet auxiliary power supply wiring and communication wiring should be reliably connected.
- Check that the battery PACK, PCS, power distribution box, liquid cooling unit, and EMS should be reliably grounded.
- Check the battery PACK and liquid cooling pipes for leaks of coolant.
- The LIQUID and TR (24V) switches & BAT SWITCH on the high voltage box, the PCS AC side circuit breaker, and the DC SWITCH 1 & 2 should be in the open state.
- The protective cover inside the device is securely installed.
- Use a multimeter to check whether the AC and DC voltages meet the starting conditions and there is no overvoltage hazard.
- All safety signs and warning labels on the cabinet are firmly affixed and clearly visible.
- Check to make sure no tools or parts have been left inside the equipment.

9.2 Unfolding EMS

1) Press the button and unfold the screen.

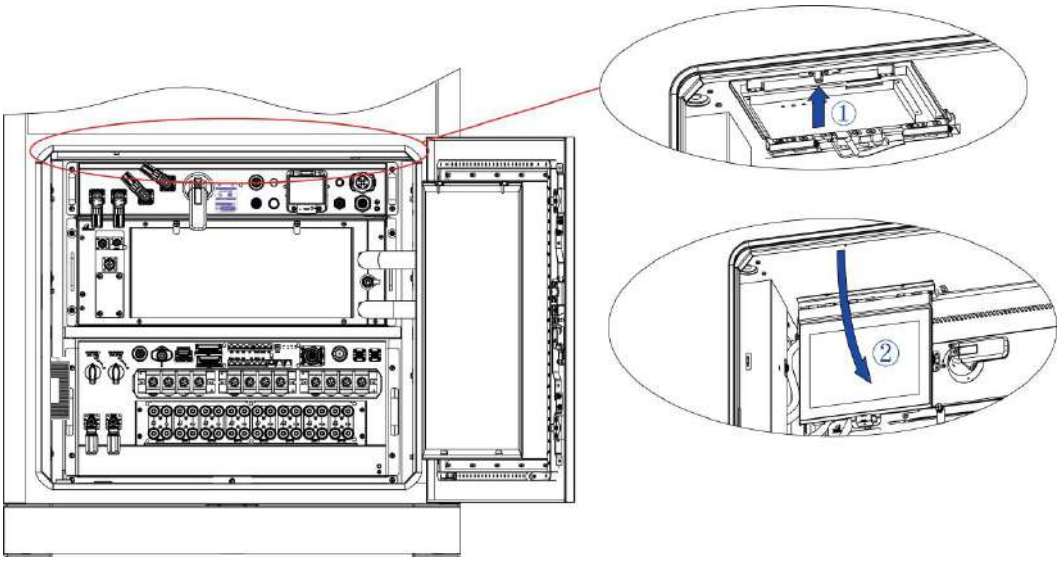

2) Press and hold square button "A" with your thumb, while pulling handle "B" downward by hand to rotate the EMS 90°.

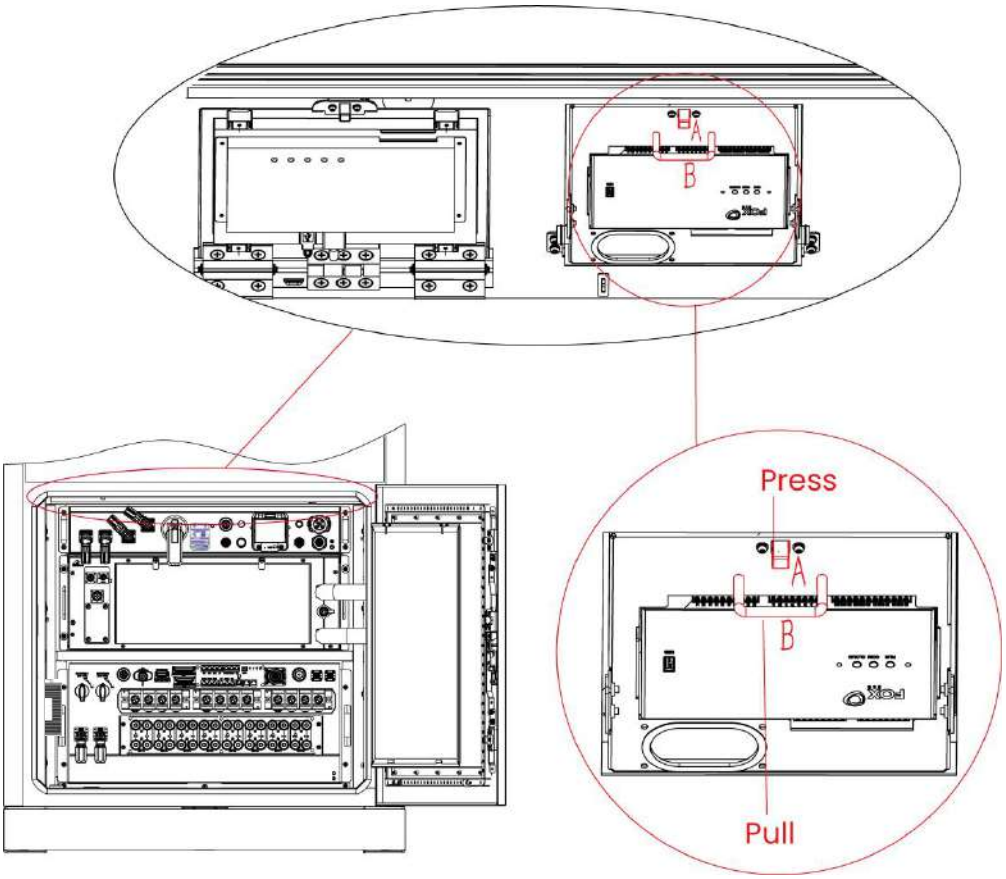

3) **Option 1 - Ethernet**

System Type	Connection Port
Single unit system	Connect the router Ethernet cable to any port on the switch.
Parallel system	Connect the sub-unit switches to any port on the main unit switch. Then connect the main unit switch to the router.

Option 2 - 4G

Ensure that the entire system is shut down and the EMS is completely powered off. Insert the Nano SIM card with the metal contacts facing downward, then restart the system.

	Note! The SIM card with at least 2 GB of data traffic is required.

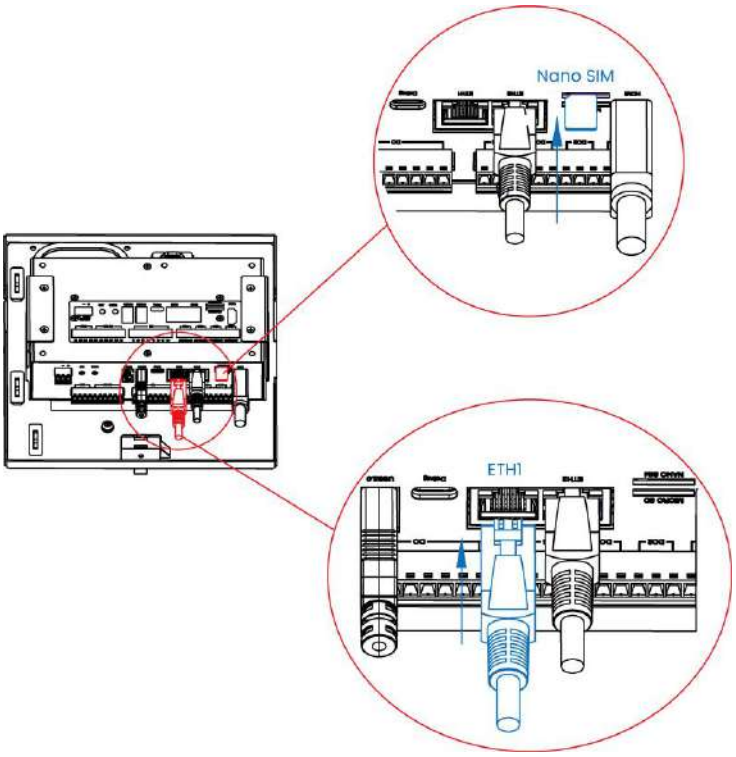

9.3 ESS Start-Up

1) Turn on **BAT SWITCH**, **LIQUID** switch, and **TR (24V)** switch.

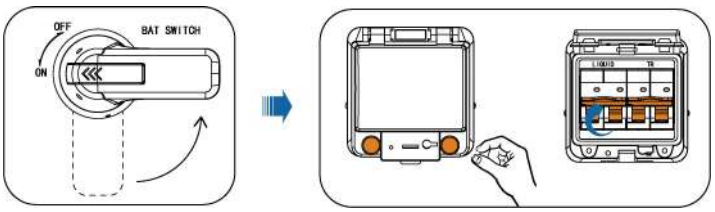

2) (Case 1) **Normal Mode**: When there is PV and grid access,

- Turn on **DC SWITCH 1***, **DC SWITCH 2***, **AC Grid Switch** and **Load Switch.**

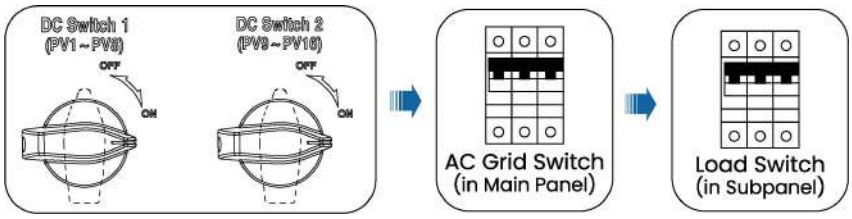

*DC Switch 1 and DC Switch 2 are available for the H version only.

(Case 2) **Black Start**: When there is no PV and grid access,

- Press and hold the battery **POWER** button for 3 seconds, and then release.
- Press the battery **POWER** button for 3 times within 4 seconds (completed within 30 seconds of the previous step).

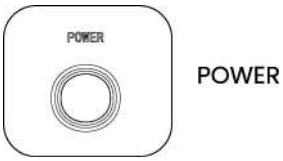

☞	**Warning!** • Do not turn on the **DC SWITCH 1*** and **DC SWITCH 2*** while the unit is running. Otherwise, it may cause a system failure.

9.4 Configuring EMS

1) Open the LCD screen of the unit and log in to the EMS with your account and password. Default account and password: "admin" and "admin1". You can also scan the QR code using a tablet or smartphone to connect to the device WiFi, then enter "192.168.138.1:8089" in the browser to access the local configuration page.

2) During initial unit deployment, the Startup Wizard will pop up. Users shall follow the on-screen prompts to complete basic configuration on each unit. On the "Language"

interface, select a language and tap "**Next**" to continue.

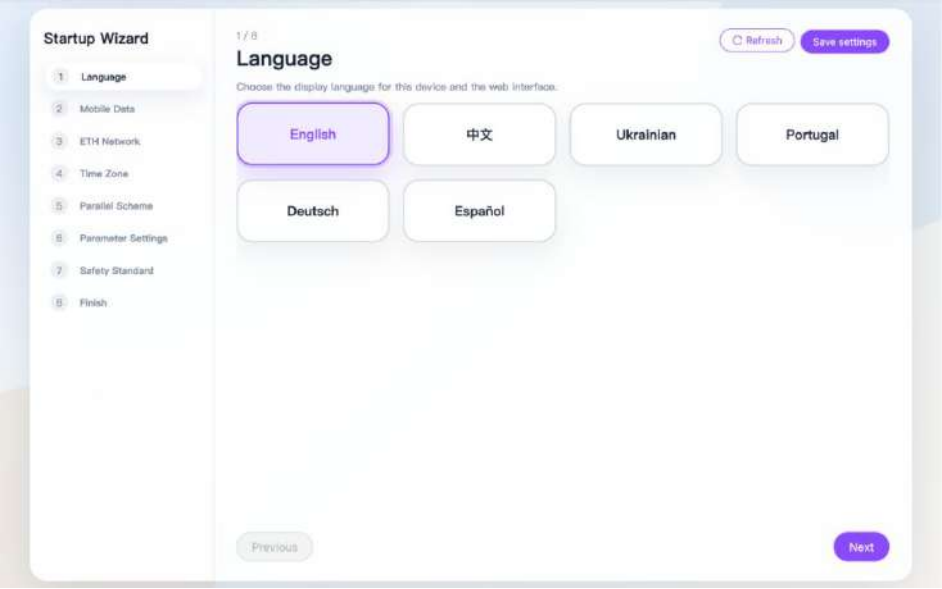

3) Configure mobile data parameters as required.

- **Case 1 - 4G Connection**

  1. Check the "**Status**" section to confirm whether the 4G module is online.
  2. Enter the monthly traffic limit according to the local SIM card plan.
  3. Tap "**Next**" to save the configuration and continue.

- **Case 2 - Ethernet Connection**

  For Ethernet connections, mobile data parameters do not need to be configured. Tap "**Skip**" at the bottom right.

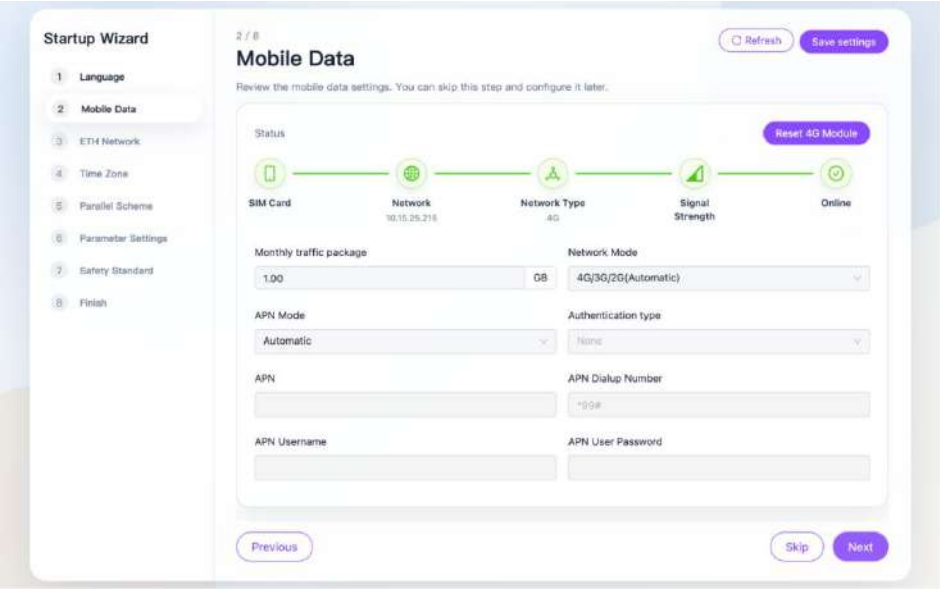

4) Configure network parameters as required.

- **Case 1 - 4G Connection**

	Note! The following steps apply to parallel systems. If a single-unit system is used, refer to case 2 or case 3 for configuration.

- For the main unit, follow the steps below to configure network parameters:

  a. Confirm whether the EMS icon is green.

  b. Set "**WAN/LAN**" to "**LAN**" and disable "**DHCP**".

  c. Set "**IP Address**", "**Gateway**", "**Preferred DNS Server**" to "192.168.0.1", and "**Subnet Mask**" to "255.255.255.0".

  d. Tap "**Next**" to continue.

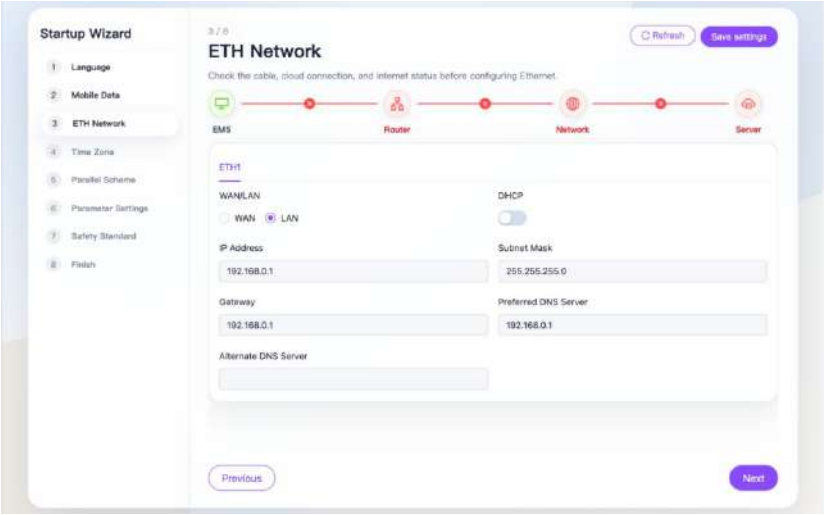

- For a sub unit, the network parameters do not need to be configured. Confirm whether the "EMS-to-router" link is green, the "**WAN/LAN**" is set to "**WAN**", and "**DHCP**" is enabled. Tap "**Next**" to continue.

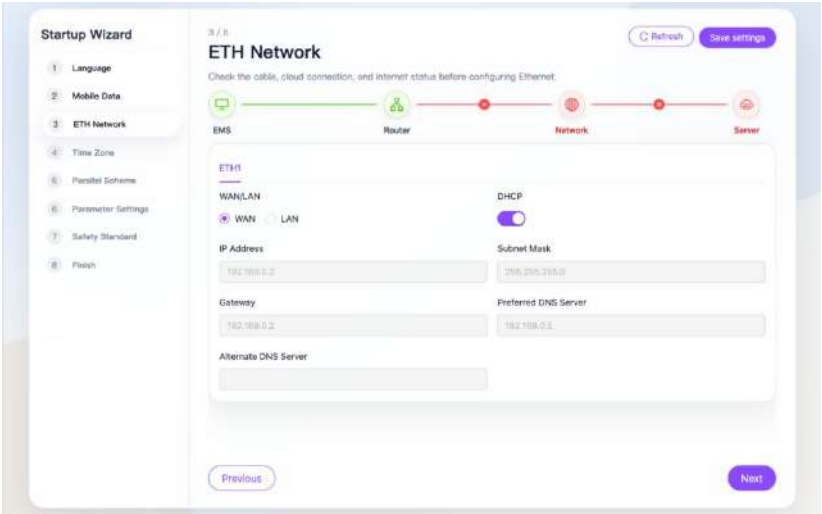

- **Case 2 - Ethernet Connection**

1. Check the connection status of the EMS, router, network and server, and confirm whether the corresponding icons are green.

2. Tap "**Next**" to continue.

- **Case 3 - Static IP Address**

1. When a static IP address is required, disable the "**DHCP**" and enter the IP address, subnet mask, gateway, preferred DNS address and alternate DNS address.

2. Tap "**Next**" to continue.

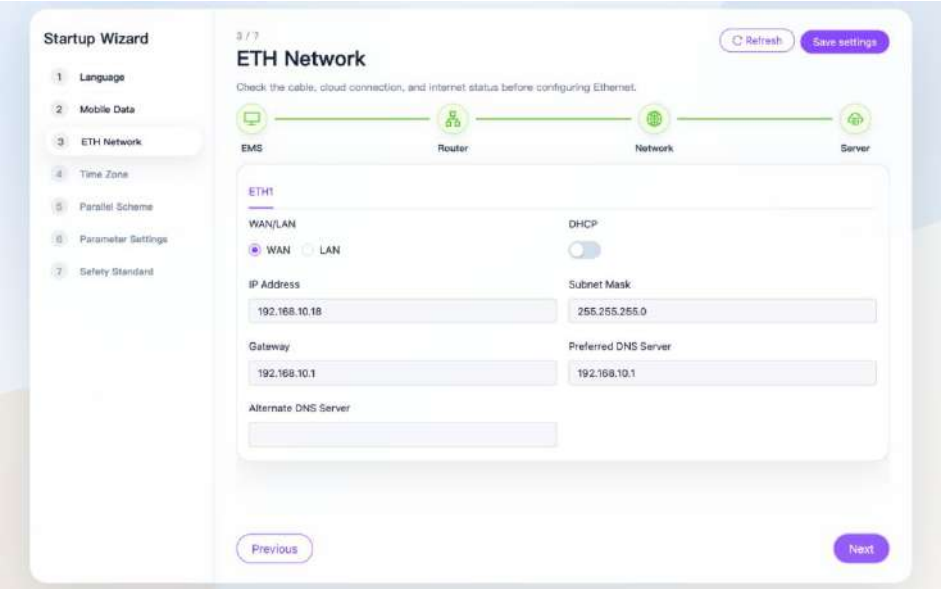

5) After the unit is connected to the network, the time zone is automatically synchronized. Confirm whether the displayed date and time are correct and tap "**Next**".

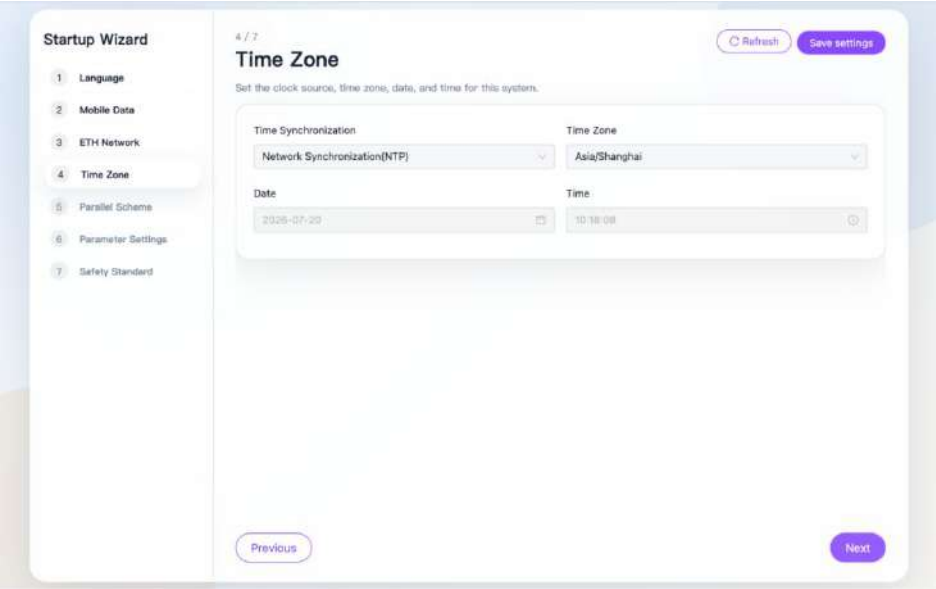

6) Select the parallel scheme applicable to the current installation scenario and tap "**Next**".

- For a single-unit system, select "**Direct**".

- For a multi-unit system, select "**Mega Kit**" when a Mega Kit is installed; select "**Mega Link**" when a Mega Link is installed; otherwise, select "**Direct**".

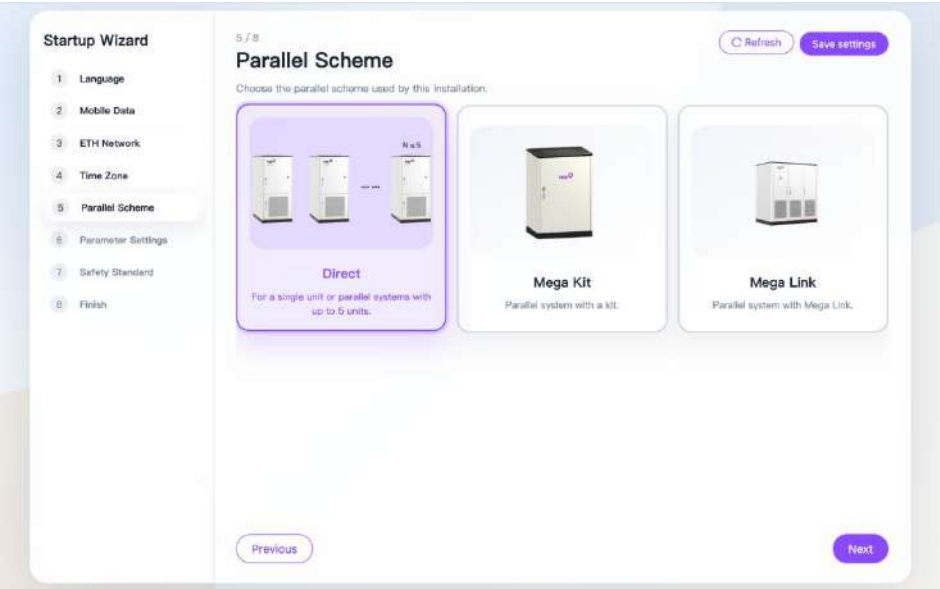

7) Configure the system operating parameters as required.

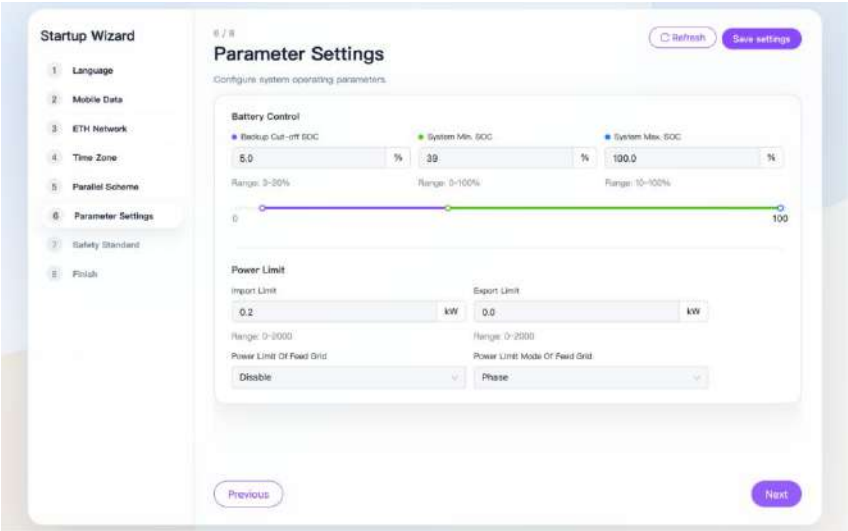

8) Configure safety regulation parameters.

1. Select the region according to the project location.
2. Select the specific safety standard under that region.
3. Tap "**Next**" to continue.

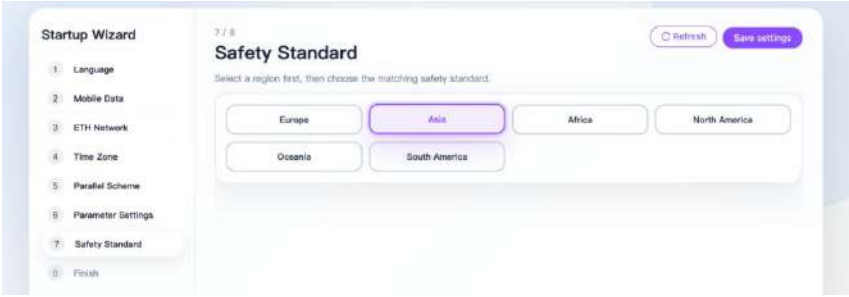

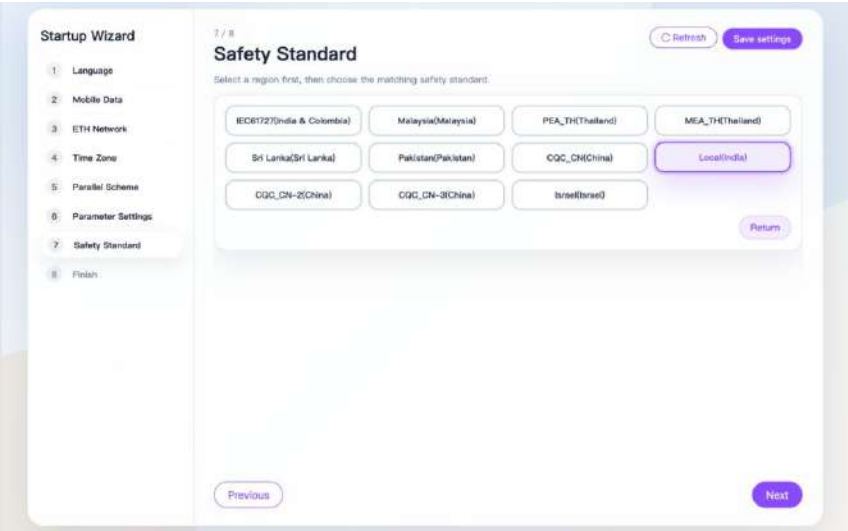

9) On the "**Finish**" interface, complete the startup wizard according to the on-screen prompts.

1. Scan the QR code to download the FoxCloud App 2.0. Users can register or log in to the App as an installer.
2. Scan the QR code in the "**Create Plant**" section to retrieve the system SN list.
3. Create a power plant and add units on the cloud platform.
4. Tap "**Complete**" to finish all settings.

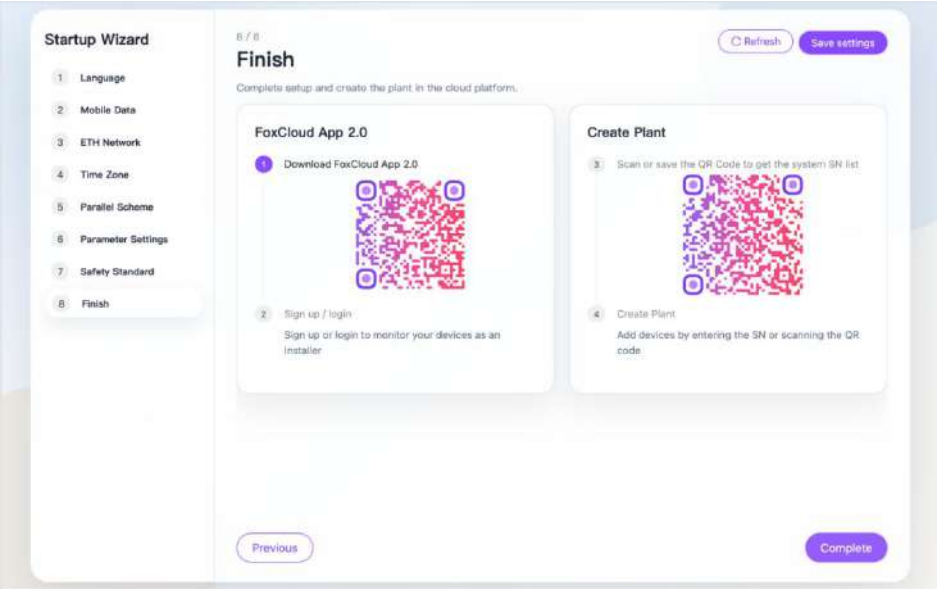

9.5 ESS Shutdown

Shutdown procedures vary depending on whether the cause is **planned maintenance/overhaul** or an **unexpected failure/emergency**. Execute the appropriate steps detailed below according to the specific situation.

9.5.1 Normal Shutdown

As to normal maintenance or inspection, follow the following procedures:

Step 1: Shut down the PCS through the shutdown operation command on the WEB interface, the FoxCloud APP 2.0 settings interface, or the local control screen.

Step 2: Open the electrical cabinet door.
Step 3: Turn off the **AC Grid Switch** (in main panel) and **Load Switch** (in subpanel).
Step 4: Press the **POWER** button for more than 5 seconds.
Step 5: Turn off the **LIQUID** switch, **TR (24V)** switch, and **BAT SWITCH** on the high voltage box.
Step 6: Turn off the **DC SWITCH 1** and **DC SWITCH 2** on the PCS.

⚠	**Warning!** When the unit is working normally, it is strictly forbidden to disconnect the **BAT SWITCH** directly to avoid the danger of arcing and damage to the **BAT SWITCH**. In severe cases, it may also cause damage to the high voltage box.

9.5.2 Shutdown in Case of Malfunction or Emergency

In case of emergency or failure, follow the following procedures:
Step 1: Press the E-STOP on the cabinet.
Step 2: Open the electrical cabinet door.
Step 3: Turn off the **AC Grid Switch** (in main panel) and **Load Switch** (in subpanel).
Step 4: Turn off the **LIQUID** switch, **TR (24V)** switch, and **BAT SWITCH** on the high voltage box.
Step 5: Turn off the **DC SWITCH 1** and **DC SWITCH 2** on the PCS.

⚠	**Warning!** The E-STOP is only used when the machine fails or is in critical condition. If the situation is urgent, be sure to press the emergency stop button directly to ensure quick response.

9.6 Upgrade via USB Drive

The EMS can be updated locally through a USB drive. Please refer to following steps:

a) Prepare the Upgrade USB Drive

1. Connect a USB drive to your computer and format it as FAT32. Ensure it is a USB 2.0 drive with at least 8 GB of free space.

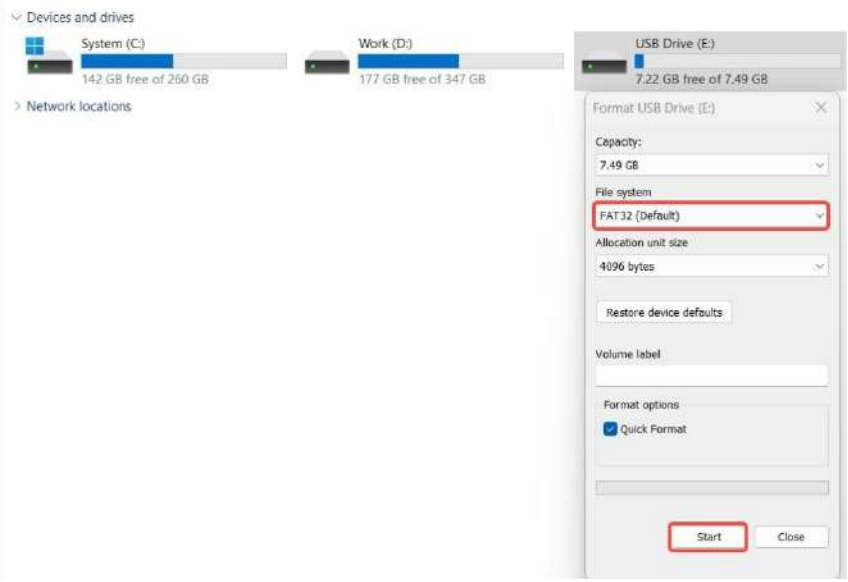

2. Contact our service support team to obtain the latest firmware, then copy the files

to the USB drive.

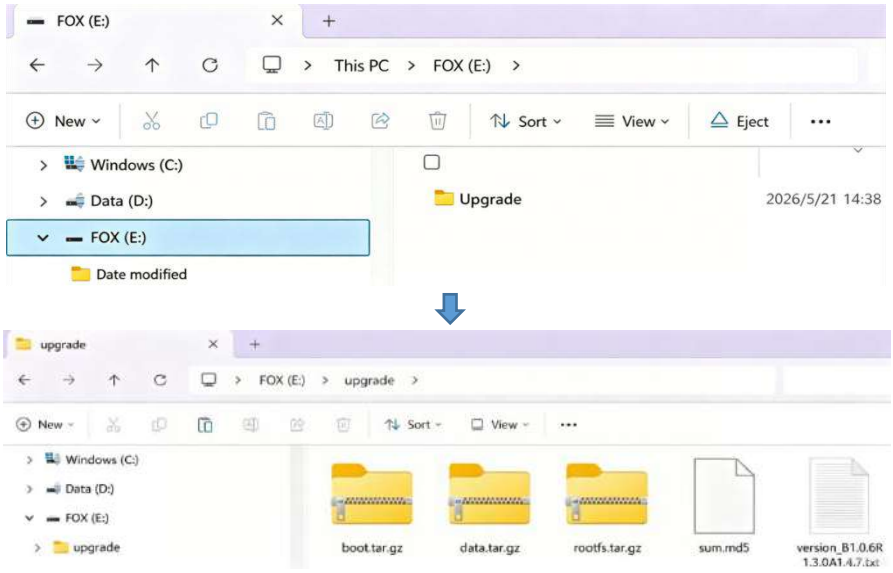

b) Prepare the PCS

- Ensure the PCS is powered on.

c) Start the Upgrade

- Insert the USB drive into the USB port on the EMS. Wait about 10 seconds for the upgrade to start.

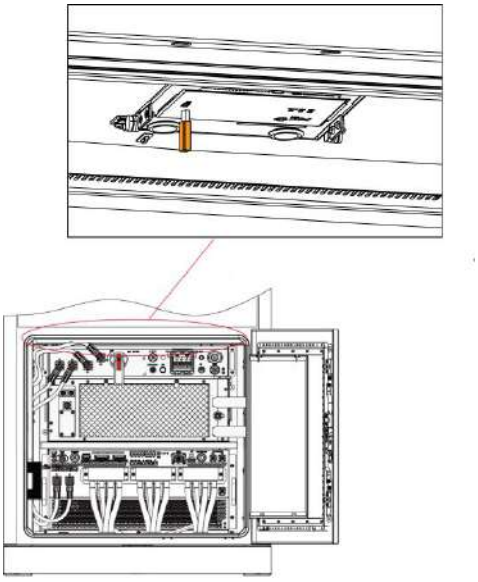

d) Wait for the Upgrade to Complete

- During the upgrade, the three EMS indicators will flash simultaneously. The screen may show a blue "No Signal" screen or remain black, which is normal.

- Wait until the penguin logo appears.

e) Upgrade Complete

- The upgrade is complete when the login page appears and the EMS running status indicator is flashing.

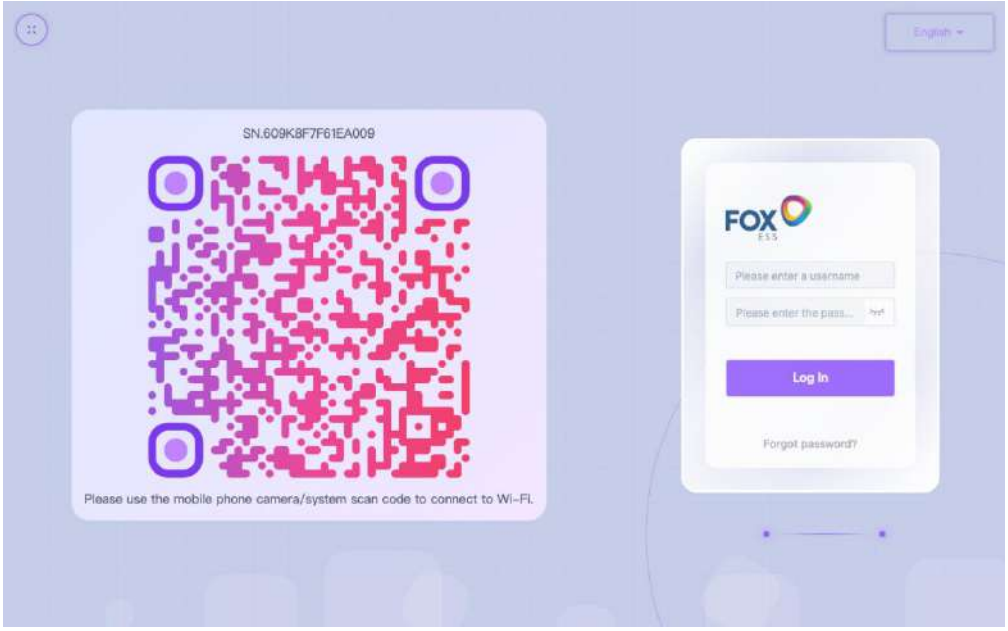

f) Verify the Software Version

- Log in with the admin account and go to "**Maintenance** > **Device Information**" to check the "**Software Version**". After confirmation, remove the USB drive.

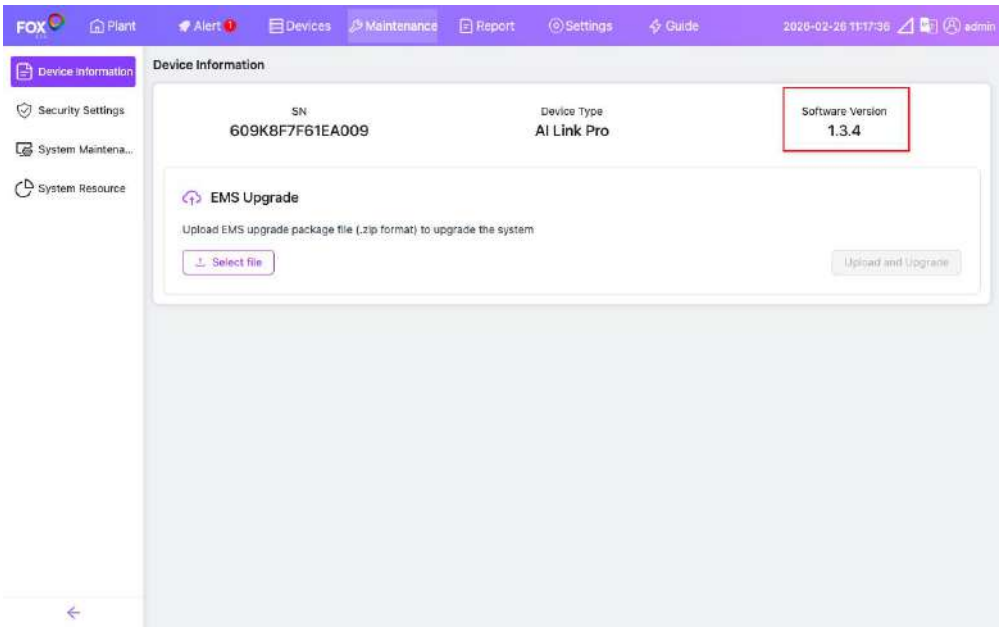

10. Maintenance

Due to the influence of environmental temperature, humidity, dust and vibration, the components inside the energy storage cabinet will age, which may cause potential failure of the energy storage cabinet or reduce the service life of the cabinet. Therefore, it is necessary to perform daily and regular maintenance on the energy storage cabinet.

⚠	**Danger!** • Even after disconnecting the AC and DC switches, the cable connection terminals inside the AC and DC cabinets of the energy storage integrated system remain live! To avoid the risk of electric shock, before performing maintenance and repair operations: ① Disconnect all AC and DC side switches. ② Disconnect the upstream and downstream circuit breakers of the energy storage integrated system. • After the power is disconnected, a warning sign needs to be placed at the disconnection point to prevent accidental re-energization during maintenance.
⚠	**Caution!** • Only personnel with professional qualifications and authorization can perform maintenance and other operations on the energy storage integration system. • After shutting down, wait at least 15 minutes before opening the cabinet door. Before starting maintenance, ensure that the inside of the equipment is completely de-energized. • To prevent unexpected hazards, maintenance personnel must wear appropriate insulating protective equipment. • Do not leave metal parts (e.g., screws, washers) inside the energy storage integrated system during maintenance, as this may damage the equipment!
☞	**Note!** • The ingress of wind, sand, and moisture can damage electrical equipment or affect the operational performance of the energy storage integrated system. • Do not open the equipment cabinet doors during windy/sandy conditions or when the ambient relative humidity exceeds 95%. • All maintenance work should only commence when conditions are windless, sand-free, clear, and dry.

10.1 Routine inspection items

Routine inspection items are implemented according to the following points:
Yearly maintenance as a target for routine inspection cycle, everything else remote.
The energy storage cabinet need to be monitored in real time, and designated personnel should be assigned to observe at designated locations. If abnormal operation or abnormal voltage and current are found, maintenance should be carried out in a timely manner.

Serial Number	Routine Inspection Items	Confirm
1	Check whether there is any abnormal sound inside the energy storage cabinet.	☐
2	Check whether there is any peculiar smell inside the energy storage cabinet.	☐
3	Check/Monitor the temperature via the EMS client to ensure it is within the normal range.	☐
4	Check that the outer surface of the chassis is not damaged, use water or alcohol to clean the dirty areas on the surface, and touch up the damaged paint on the surface. Please refer to the detailed steps.	☐
5	Check that there is no damage or rust on the appearance of the equipment.	☐
6	The internal temperature of the equipment was checked with an infrared temperature measuring instrument and no abnormality was found.	☐
7	Check whether the equipment's ventilation, ambient temperature, humidity, dust and other environmental conditions meet the requirements.	☐
8	Check whether the insulation layer of the cable is aging or damaged. If necessary, add corresponding insulation measures or replace the cable.	☐
9	Check that there are no signs of aging or burning on the connecting bolts, and use tools to confirm that they are in a tightened state.	☐

10.2 Maintenance of Liquid Cooling Unit

In order to ensure the normal operation of the liquid cooler, regular maintenance is required.

Maintenance Items	Maintaining Standards	Maintenance Cycle	Detection Method	Approach
Appearance of the unit	The unit is clean and free of dust and dirt	6 months	Visual inspection	After power off for 1 minute, use a brush or cotton cloth to remove dust and dirt from the unit.
Fan operation reliability	There is no dust or other foreign matter blocking the air outlet. The fan blades are not damaged, and	6 months	Visual inspection	After power is turned off for 1 minute, use a brush to clean the dust on the fan, tighten the fan, and check whether there are any internal

	the fan rotates smoothly without abnormal noise.			cables interfering with the fan's rotation. Clean any foreign objects at the air outlet.
Reliability of power cables and power terminals in wiring panels	The power plug is not loose	6 months	Visual inspection	After the power is turned off for 1 minute, disconnect the loose power plug quick connector and reconnect it.
	The power cable is not aged, damaged, abnormally heated, or has other abnormalities.	6 months	Visual inspection	Contact the manufacturer for replacement.
	No dust in the wiring panel	6 months	Visual inspection	After turning off the power for 1 minute, use a brush to clean the dust.
Condenser cleaning	The condenser is free of dust and foreign matter	6 months	Visual inspection	After power off for 1 minute, use high pressure gas to blow out the condenser.
	The fins have no serious bending deformation	6 months	Visual inspection	After power off for 1 minute, use a fin comb or other tool to make corrections.
Cooling medium	Concentration meets the range requirements PH and electrolytes Concentration meets the requirements No dirt, sediment, algae, etc.	6 months	Coolant tester	Contact the manufacturer to replace the cooling liquid.

Pipeline appearance	No damage, deformation or corrosion on the exterior	6 months	Visual inspection	After power off for 1 minute, drain the coolant and replace the corresponding pipeline.
Pipeline reliability	The pipes are fixed and the connection joints are not loose.	6 months	Visual inspection	After power off for 1 minute, tighten the loose parts.
Valve body reliability	No failure or damage to the valve body	6 months	Commissioning	After power off for 1 minute, drain the coolant and replace the corresponding valve parts.

10.3 Maintenance of Battery

When the LED of the High Voltage Box on the panel is flashing or normally on, it does not mean that the battery is abnormal, it may be just an alarm or protection. Please check the following table for the detailed faulty definition before any trouble-shooting steps. In general, the alarm indication is normal without manual intervention. When the alarm triggering state is removed, the battery will automatically return to normal use.

- Problem determination based on the following points

1) Whether the status LED light on the High Voltage Box is on.
2) Whether the battery system can be communicated with inverter.
3) Whether the battery can output voltage or not.

- Preliminary determination steps

If the battery system does not operate when the DC switch is turned on and the POWER button is pressed for 3 seconds, and the LED does not light up or flash, please contact your local distributor.

1) The status LED of the High Voltage Box is normal, but it cannot charge and discharge. Observe the display screen of EMS and there is no SOC. Please check whether the communication between BMS to inverter is well connected. If the connection is good, please replace communication cable. If the SOC is still not visible on the EMS display screen, please contact the local distributor.
2) After the battery system is powered on, if you can see the alarm information on the LED and EMS display screen at the same time, please contact the local distributor.

Status of LED Indicator on High Voltage Box

High Voltage Box Condition	LED Indication		Remarks
	Red	Green	
Upgrade	■	■	Red and green LEDs flash simultaneously (yellow indication).
Start	■/■		Red and green LEDs flash alternately 3 times.
Self-check/Standby	/	■	Green LED flashing
Charge	/	◆	Green LED slow flashing
Discharge/Idle	/	●	Green LED solid on
Fault	●	/	Red LED solid on
Shutdown	■	/	Red LED flashes and then turns off.
Maintenance Mode	◆	◆	Red and green LEDs flash simultaneously at a slow rate (yellow indication).

Remarks:

■ ■ : LED flashing (on: 0.5s, off: 0.5s) /: LED off

● ● : LED solid on ◆ ◆ : LED slow flashing (on: 2s, off: 2s)

10.4 Other Maintenance Projects

To ensure the normal operation of the energy storage cabinet, please refer to the following table to perform regular maintenance on the energy storage cabinet.

Maintenance Project	Maintenance Methods	Maintenance Cycle
Internal electrical component inspection	Check the following items and perform maintenance a. Check the dust on the circuit board and components. If there is too much dust, use tools to clean it.	Half a year
Security function check	Check the following items and perform maintenance a. Check the safety warning signs of the energy storage system. If any damage or blur is found, please replace it in time.	Half a year

	b. Check whether the emergency stop function of the equipment is normal	
Inside the device	Check the following items and perform maintenance a. Check whether there is pollution, foreign matter, dust inside the equipment and clean it	One year
Energy storage cabinet wiring harness inspection	Check the following items and perform maintenance a. Check whether the equipment wiring harness rubber sleeve is damaged, whether the copper wire is exposed, damaged, rusted, etc., and whether the connecting screws are loose. b. Check whether the inlet and outlet holes of the energy storage cabinet are sealed completely.	One year
Ground	Check the following items and perform maintenance a. Check whether the ground wire is connected reliably b. Check whether the ground wire resistance meets the specification	One year
System status	Check the following items and perform maintenance a. Check whether there is excessive noise, vibration or other abnormal phenomena during the operation of the equipment b. Check whether the temperature and humidity of the equipment are within the normal range. c. Check whether the equipment is damaged, components are damaged, or rusted. d. Check whether the air outlet of the device is blocked	Two years

☞	**Note!** The table only shows the recommended routine maintenance intervals for the product. The actual maintenance cycle should be determined based on the specific installation environment of the product. Factors such as the scale of the power station, its location, and the on-site environment will all affect the maintenance cycle of the product. If the operating environment is windy and sandy, the maintenance cycle needs to be shortened and the maintenance frequency increased.

10.5 System Cleaning

Since the energy storage cabinet operates outdoors for a long time, regular cleaning is necessary. Regular cleaning can maintain the appearance of the equipment, reduce corrosion of the casing, improve the heat dissipation efficiency of the equipment, thereby extending the service life of the equipment and improving system operating efficiency.

1. Clean the outside of the energy storage cabinet

The exterior of the energy storage cabinet can be sprayed with cleaning agent and then wiped with a rag to prevent water stains from flowing into the equipment from the air

outlet during cleaning.

2. Clean the inside of the energy storage cabinet

Inside the energy storage cabinet, use a vacuum cleaner to absorb dust.

3. Door lock and hinge inspection

Check whether the door locks, hinges, etc. of the energy storage cabinet can be used normally and whether there are any jams, etc.

4. Inspection of sealing condition

A good seal is an important guarantee for effectively preventing water seepage inside the energy storage cabinet. It should be carefully checked. If the seal is damaged, please deal with it immediately.

10.6 Cabinet Refinishing

In adverse weather conditions, such as rain, snow, high winds, sandstorms, etc., refinishing shall be discontinued if the outdoor installation area of the equipment is not covered in any way.

When replacing the paint, please strictly follow the same or similar colour of the location where the paint has fallen off.

In order to keep the appearance of the equipment in good condition, if you find any paint falling off, please touch up the paint immediately.

10.6.1 Paint Refinishing Instructions

<table>
<tr><th>Extent of paint damage</th><th>Tools & Materials</th><th>Paint Repairing Steps</th><th>Paint Refinishing Instructions</th></tr>
<tr><td>Slight paint loss on equipment (not touching steel substrate)</td><td rowspan="2">Spray paint or lacquer, brush (for fine areas of paint loss), fine sandpaper, pure alcohol, cotton cloth, spray gun (for large areas of paint loss).</td><td rowspan="2">Steps 1, 2, 3 and 5 (in Section 10.6.2)</td><td rowspan="5">a. For colours, please contact after-sales service.
b. For minor paint loss or small areas of stubborn dirt, it is recommended to use spray paint and brush for touch-up.
c. For severe paint loss or large areas of stubborn dirt, it is recommended to use oil paint and a spray gun for touch-ups.
d. When painting, make sure that the damaged areas are and the thickness of the paint are and the thickness of the paint are even and appropriate to</td></tr>
<tr><td>Stubborn dirt on equipment</td></tr>
<tr><td>Significant paint loss on equipment (primer damaged, touching steel substrate)</td><td>Spray paint or lacquer, zinc-rich primer, brush (for fine areas of paint loss), fine sandpaper, pure alcohol, cotton cloth, spray gun (for large areas of paint loss).</td><td>Steps 1, 2, 3, 4 and 5 (in Section 10.6.2)</td></tr>
<tr><td>Logo or design broken and surface dented</td><td colspan="2">If the logo or any other design is damaged, please contact your local paint company for a paint refinishing plan based on the size, colour and extent of the damage to the logo or</td></tr>
</table>

	design. a. For damage <100 mm² and <3 mm deep, it is recommended that the dents are first filled with atomic grey and then treated in accordance with the Severe Paint Loss Treatment Procedure. b. If the damage is >100 mm² or >3 mm in depth, please contact your local supplier for a repair plan according to the actual situation.	ensure the appearance of the whole The appearance is uniform. e. After painting, let the cabinet stand for at least 30 minutes to allow the paint to dry. After painting, the cabinet must be left to dry for at least 30 minutes before proceeding to the next step. dry before proceeding to the next step.

10.6.2 Paint Repairing Steps

Step 1: Lightly sand the painted areas with fine sandpaper to remove any surface rust or dirt.

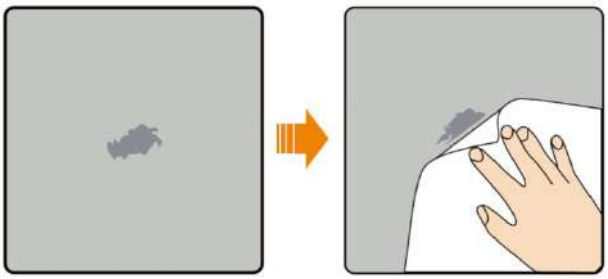

Sanding off areas of paint

Step 2: Clean the paint loss area properly with a damp cotton cloth to remove the dirt, and then wipe it with a dry cotton cloth.

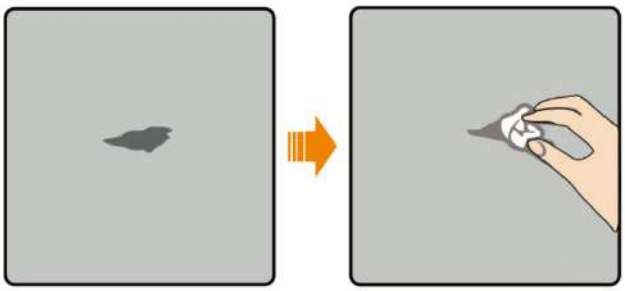

Cleaning of paint loss areas

Step 3: Apply the zinc rich primer to the surface of the flaking area with a brush or spray gun.

If the metal layer underneath the area of paint loss is exposed.

- First, an epoxy zinc-rich primer must be applied to the surface of the metal layer ;
- Next, an acrylic topcoat is applied until the primer dries and completely covers

the bare metal layer.

Epoxy zinc-rich primer and acrylic topcoat should be decided according to the paint coating of the equipment surface.

Step 4: Depending on the extent of the paint damage, either self-apply, brush or use a spray gun to evenly spray the damaged area.

When refinishing, make sure that the application range, paint thickness and smoothness of the area where the paint has fallen off are all even and appropriate to ensure a consistent overall appearance.

If there are other colours around the area where the paint has fallen off, carefully cover the undamaged area with tape or paper before painting to avoid accidentally spraying on the other colours.

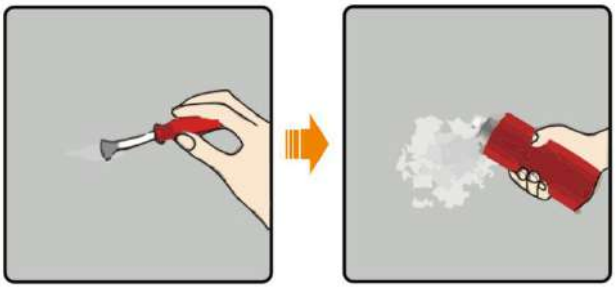

Touch up paint

Step 5: After touching up, allow the paint to dry for at least 30 minutes and then check the area for compliance.

The colour of the repaired area should be the same as the colour of the surrounding area. The colour difference can be measured with a colourimeter and should be ≤ 3. For colours that cannot be measured with a colourimeter, make sure that there is no significant colour difference between the edges of the repaired area and the surrounding area, and that there are no bumps, scratches, paint flaking or paint breaks.

If spray painting is used, it is recommended that 3 coats be applied before checking for compliance. If not, please repeat the spraying several times until it meets the requirements.

10.7 Alarm List

Item	Fault Code	Statement	Solution
1	1030	AC Overcurrent	1. The inverter continuously monitors its external working conditions in real time, and it can automatically recover once the fault is rectified. 2. If the fault is triggered frequently and affects the power production of the PV plant, check for any short circuits in the grid or the output. If the fault persists, contact your installer.

Item	Fault Code	Statement	Solution
2	1034	DC Component Current Fault	1. If the fault is triggered accidentally, it may be due to temporary abnormalities in the power grid. The inverter will automatically recover after the power grid has resumed normal operation. 2. Check whether the on-grid voltage is normal. 3. If the fault still exists, contact your installer.
3	1035	High Leakage Current Fault	1. If the fault is triggered accidentally, the external power cable may be abnormal temporarily. The inverter will automatically recover once the fault is rectified. 2. If the fault is triggered frequently or persists, check that the impedance between the PV string and ground is not below the lower threshold.
4	1036	Static Leakage Current Fault	
5	1040	Unbalanced Grid Voltage	1. Check that the grid voltage is within the normal range. 2. Check whether the neutral cable is connected correctly. 3. If the cable is connected properly but the fault is triggered frequently and affects the power production of the PV plant, contact the local power operator.
6	1042	Grid Frequency High	1. If the fault is triggered accidentally, it may be due to temporary abnormalities in the power grid. The inverter will automatically recover after the power grid has resumed normal operation. 2. If the fault is triggered frequently, check whether the grid frequency is within the acceptable range. If it is not, contact the local power operator. If grid frequency is within the acceptable
7	1043	Grid Frequency Low	

Item	Fault Code	Statement	Solution
			range, modify the grid overfrequency protection threshold with the consent from the local power operator.
8	1044	Grid Phase Voltage Over Limit	1. If the fault is occasionally triggered, it may be caused by temporary voltage anomalies in the power grid. The inverter will automatically resume operation once the grid returns to normal. 2. Check whether the grid-connected phase voltage exceeds the specified limit. If it is outside the standard range, contact the local power operator for grid adjustment measures. 3. If the grid-connected phase voltage has been confirmed to exceed the limit and approval has been obtained from the local power operator, you may manually adjust the over/undervoltage protection threshold parameters to adapt to actual grid conditions.
9	1045	Grid Line Voltage Over Limit	1. If the fault is occasionally triggered, it may be caused by temporary voltage anomalies in the power grid. The inverter will automatically resume operation once the grid returns to normal. 2. Check whether the grid-connected line voltage exceeds the specified limit. If it is outside the standard range, contact the local power operator for grid adjustment measures. 3. If the grid-connected line voltage has been confirmed to exceed the limit and approval has been obtained from the local power operator, you may manually adjust the over/undervoltage protection threshold parameters to adapt to actual grid conditions.

Item	Fault Code	Statement	Solution
10	1046	Unbalanced Inverter Current	1. If the fault is sporadically triggered, it may be caused by temporary grid voltage anomalies. The inverter will automatically resume operation once the grid returns to normal. Check if the grid-connected voltage is unbalanced. If it exceeds the standard range, contact the local power operator for grid adjustments. 2. If grid-connected voltage abnormalities have been confirmed: Wait for the grid to stabilize and return to normal. 3. If the grid voltage shows no anomalies: Power off all inverters, wait 5 minutes before restarting. 4. If the issue persists, contact your installer.
11	1048	High DC Component Voltage When Off-grid	1. If the fault is triggered accidentally, it may be due to temporary radiation interference. The inverter will automatically recover after the interference disappear. 2. If the fault is triggered frequently, contact your installer.
12	1050	Inverter Hardware Overcurrent	1. Check whether the AC grid cables are connected correctly. 2. The inverter monitors its external working conditions in real time. And it will automatically recover once the fault is rectified. 3. If the fault is triggered frequently and affects the power production of the PV plant, check whether the grid or the output is overloaded or short-circuited. If the fault persists, contact your installer.
13	1051	Grid Phase Drop Fault	1. Check the configuration if the "OFF-GRID Enable" is set.

Item	Fault Code	Statement	Solution
			2. Check whether the grid voltage and frequency are within the acceptable range, if they are both within the acceptable range, contact your installer.
14	1057	Bus Transient Overvoltage	1. If the fault is triggered accidentally, it may be due to temporary abnormalities in the power grid. The inverter will automatically recover once the power grid has resumed normal functioning. 2. Check the PV open voltage is higher than upper threshold of the specification. 3. If the fault still exists, contact your installer.
15	1070	Bus Differential High Fault	1.Turn off the AC output switch, DC input switch, and battery switch in order, and then turn on the battery switch, AC output switch, and DC input switch in sequence after 5 minutes. 2. If the fault still exists, contact your installer.
16	1071	Bus Hardware Overvoltage	1. Check whether all the PV cables are connected correctly. 2. Check the PV open voltage is higher than upper threshold of the specification. 3. Turn off the AC output switch, DC input switch, and battery switch in order, and then turn on the battery switch, AC output switch, and DC input switch in sequence after 5 minutes. 4. If the fault still exists, contact your installer.
17	1084	Balancing Bridge Hardware Overcurrent	1. If the fault is triggered accidentally, it may be due to temporary radiation interference. The inverter will automatically recover once the interference disappears.

Item	Fault Code	Statement	Solution
			2. If the fault is triggered frequently, contact your installer.
18	1085	DC Input MPPT1 Access Fault	Check whether the PV cables are connected correctly. If they are, contact your installer.
19	1086	DC Input MPPT2 Access Fault	
20	1088	DC Input MPPT3 Access Fault	
21	1091	Off grid command conflict	Check whether the configurations "OFF GRID Enable" and "Go OFF GRID" are coincident.
22	1092	INV Relay Fault	1. Check whether the neutral cables are connected correctly. 2. Check whether the configuration of "Country" is correct. 3. If the fault still exists, contact your installer.
23	1093	EPS Relay Fault	1. Check whether the neutral cables are connected correctly. 2. Check whether the configuration of "Country" is correct. 3. If the fault still exists, contact your installer.
24	1095	ESTOP Trigger	1. Check whether the Emergency Stop Switch is pushed. 2. Check whether the Emergency Stop Switch cable is open. 3. Check whether the Emergency Stop Switch cable is connected to the correct connector of the device. 4. Check whether the jumper in the inverter or the FOX Hub is connected well. 5. If the fault still exists, contact your installer.
25	1099	Overtemperature Protection	1. Check the ventilation and ambient temperature at the inverter installation position.

Item	Fault Code	Statement	Solution
			2. If the ventilation is poor or the ambient temperature exceeds the upper threshold, improve the ventilation and heat dissipation. 3. Check whether the heatsink is covered with dust. If it is, clean the heatsink. 4. If the ventilation and ambient temperature both meet requirements, contact your installer.
26	1102	Inverter Current DC Component Offset Fault	1.Turn off the AC output switch, DC input switch, and battery switch in order, and then turn on the battery switch, AC output switch, and DC input switch in sequence after 2 minutes. 2. If the fault still exists, contact your installer.
27	1103	Inverter Current Offset Fault	
28	1106	Inverter Soft Start Timeout Fault	1. Check if the AC grid is normal. 2. If the fault still exists, contact your installer.
29	1107	BUS Soft Start Fault	1. Check whether all the PV cables and battery cables are connected correctly. 2. Check whether the output is overloaded or short-circuited. 3. Check the SOC of the battery and if the power of the loads exceeds the battery's power. 4. If the fault still exists, contact your installer.
30	1108	Abnormal Frequency Detection Value	1. If the fault is triggered accidentally, it may be due to temporary abnormalities in the power grid. The inverter will automatically recover after the power grid has resumed normal operation. 2. If the fault is triggered frequently, check whether the grid voltage is within the acceptable range. If it is not, contact the local power operator. If

Item	Fault Code	Statement	Solution
			grid voltage is within the acceptable range, contact your installer.
31	1109	Leak Current CT Self-checking Fault	1.Turn off the AC output switch, DC input switch, and battery switch in order, and then turn on the battery switch, AC output switch, and DC input switch in sequence after 2 minutes. 2. If the fault still exists, contact your installer.
32	1112	Internal Control Diagnosis Fault	1.Turn off the AC output switch, DC input switch, and battery switch in order, and then turn on the battery switch, AC output switch, and DC input switch in sequence after 2 minutes. 2. If the fault still exists, contact your installer.
33	1115	Balancing Bridge Current Sampling Channel Fault	1.Turn off the AC output switch, DC input switch, and battery switch in order, and then turn on the battery switch, AC output switch, and DC input switch in sequence after 2 minutes. 2. If the fault still exists, contact your installer.
34	1116	Ground Impedance Fault	1.Check if the grounding cable is properly connected. 2.Verify the insulation integrity between the ground wire and live wire. 3.If the issue persists, contact Maitian Customer Service Center.
35	1123	Grid Relay Fault	1. Check whether the AC grid cables especially the neutral cables are connected correctly. 2. Check whether the configuration of "Country" is correct. 3. If the fault still exists, contact your installer.
36	1124	Low Insulation Impedance Fault	1. Check the impedance between the PV array output and PE, and eliminate short circuits and poor insulation

Item	Fault Code	Statement	Solution
			points. 2. Check that the inverter PE cable is correctly connected. 3. If you are sure that the impedance is less than the default threshold value in a cloudy or rainy environment, contact your installer to reset the "Insulation Resistance Threshold Setting".
37	1125	Ground Relay Fault	1.Turn off the AC output switch, DC input switch, and battery switch in order, and then turn on the battery switch, AC output switch, and DC input switch in sequence after 2 minutes. 2. If the fault still exists, contact your installer.
38	1129	INV Open-loop Self-checking fault	1. Check if the AC grid is normal. 2. If the fault still exists, contact your installer.
39	1132	INV Frequency Fault Under Off-grid	1. If the fault is triggered accidentally, it may be due to temporary radiation interference. The FOX Inverter will automatically recover after the interference disappears. 2. If the fault is triggered frequently, contact your installer.
40	1136	Load Overpower Fault	1. Check if the power of the loads exceeds the rated value. 2. Check the SOC of the battery and verify if the power of the loads exceeds the battery's power. 3. If the fault still exists, contact your installer.
41	1137	INV Low Voltage Fault Under Off-grid	1. Check if the power of the loads exceeds the rated value. 2. Check the SOC of the battery and verify if the power of the loads exceeds the battery's power. 3. If the fault still exists, contact your installer.

Item	Fault Code	Statement	Solution
42	1138	Redundant Detection Fault of Grid Voltage for Auxiliary DSP	Check whether the AC grid voltage is normal.
43	1139	Redundant Detection Fault of Grid Frequency for Auxiliary DSP	Check whether the AC grid frequency is normal.
44	1141	Redundant Detection Fault of Leak Current for Auxiliary DSP	Check the impedance between the PV string and ground.
45	1145	Arc Fault	Check whether the string circuit arcs are in poor contact. After the fault is rectified, manually clear the fault and then start again.
46	1149	INV High Voltage Fault Under Off-grid	1. If the fault is triggered accidentally, it may be due to temporary radiation interference. The inverter will automatically recover after the interference disappears. 2. If the fault is triggered frequently, contact your installer.
47	1154	INV Overcurrent Permanent Fault	1. Check whether the grid or the output is overloaded or short-circuited. 2. Turn off the AC output switch, DC input switch, and battery switch in order, and then turn on the battery switch, AC output switch, and DC input switch in sequence after 2 minutes. 3. If the fault still exists, contact your installer.
48	1157	Relay Permanent Fault	1. Check whether the AC grid cables especially the neutral cable are connected correctly. 2. Check whether the configuration of "Country" is correct. 3. Turn off the AC output switch, DC input switch, and battery switch in order, and then turn on the battery switch, AC output switch, and DC input switch in sequence after 2 minutes.

Item	Fault Code	Statement	Solution
			4. If the fault still exists, contact your installer.
49	1160	INV SelfCheck Permanent Fault	1. Turn off the DC input switch, and battery switch in order, and then turn on the battery switch and DC input switch in sequence after 2 minutes. 2. If the fault still exists, contact your installer.
50	1163	Balancing Bridge Overcurrent Permanent Fault	1. Turn off the AC output switch, DC input switch, and battery switch in order, and then turn on the battery switch, AC output switch, and DC input switch in sequence after 2 minutes. 2. If the fault still exists, contact your installer.
51	1173	Internal Control Diagnosis Permanent Fault	1. Turn off the DC input switch, and battery switch in order, and then turn on the battery switch and DC input switch in sequence after 2 minutes. 2. If the fault still exists, contact your installer.
52	1174	BUS Hardware Overvoltage Permanent Fault	1. Turn off the DC input switch, and battery switch in order, and then turn on the battery switch and DC input switch in sequence after 2 minutes. 2. If the fault still exists, contact your installer.
53	1176	BST Hardware Overcurrent Permanent Fault	1. Turn off the DC input switch, and battery switch in order, and then turn on the battery switch and DC input switch in sequence after 2 minutes. 2. If the fault still exists, contact your installer.
54	1177	Static Leak Current Permanent Fault	1. Turn off the DC input switch, and battery switch in order, and then turn on the battery switch and DC input switch in sequence after 2 minutes. 2. If the fault still exists, contact your installer.

Item	Fault Code	Statement	Solution
55	1178	BUS Overvoltage Permanent Fault	1. Turn off the DC input switch, and battery switch in order, and then turn on the battery switch and DC input switch in sequence after 2 minutes. 2. If the fault still exists, contact your installer.
56	1179	High BUS Voltage Imbalance Permanent Fault	1. Turn off the DC input switch, and battery switch in order, and then turn on the battery switch and DC input switch in sequence after 2 minutes. 2. If the fault still exists, contact your installer.
57	1181	Arc Permanent Fault	1. Check whether all the PV cables are connected correctly. 2. Turn off the AC output switch, DC input switch, and battery switch in order, and then turn on the battery switch, AC output switch, and DC input switch in sequence after 2 minutes. 3. If the fault still exists, contact your installer.
58	1182	BDC Overcurrent Permanent Fault	1. Check whether if the output is overloaded or short-circuited. 2. Shut down the battery and check that the communications cable and power cable between the inverter and the battery are properly connected. 3. Turn off the AC output switch, DC input switch, and battery switch in order, and then turn on the battery switch, AC output switch, and DC input switch in sequence after 2 minutes. 4. If the fault still exists, contact your installer.
59	1185	Abnormal Grid Startup Voltage	1. Check whether the grid voltage and frequency are normal. 2. If the alarm is triggered accidentally, it may be due to temporary radiation interference. The inverter will automatically recover

Item	Fault Code	Statement	Solution
			after the interference disappears. 2. If the alarm is triggered frequently, contact your installer.
60	1186	Off-grid Running Alarm	1. Check whether the grid voltage and frequency are normal.
61	1188	AC Lightening Protector Anomaly	1. Turn off the AC output switch, DC input switch, and battery switch in order, and then turn on the battery switch, AC output switch, and DC input switch in sequence after 2 minutes. 2. If the alarm still exists, contact your installer.
62	1189	DC Lightening Protector Anomaly	1. Turn off the AC output switch, DC input switch, and battery switch in order, and then turn on the battery switch, AC output switch, and DC input switch in sequence after 2 minutes. 2. If the alarm still exists, contact your installer.
63	1190	Temperature Sensor Alarm	1. Turn off the AC output switch, DC input switch, and battery switch in order, and then turn on the battery switch, AC output switch, and DC input switch in sequence after 2 minutes. 2. If the alarm still exists, contact your installer.
64	1191	External Fan Alarm	1. Turn off the AC output switch, DC input switch, and battery switch in order, and then turn on the battery switch, AC output switch, and DC input switch in sequence after 2 minutes. 2. If the alarm still exists, contact your installer.
65	1192	Internal Fan Alarm	1. Turn off the AC output switch, DC input switch, and battery switch in order, and then turn on the battery switch, AC output switch, and DC input switch in sequence after 2 minutes. 2. If the alarm still exists, contact your

Item	Fault Code	Statement	Solution
			installer.
66	1193	EEPROM Write-read Alarm	1. Turn off the AC output switch, DC input switch, and battery switch in order, and then turn on the battery switch, AC output switch, and DC input switch in sequence after 2 minutes. 2. If the alarm still exists, contact your installer.
67	1194	Sub to Main Communication Alarm	1. Turn off the AC output switch, DC input switch, and battery switch in order, and then turn on the battery switch, AC output switch, and DC input switch in sequence after 2 minutes. 2. If the alarm still exists, contact your installer.
68	1195	Grid Phase Change Alarm	1. Turn off the AC output switch, DC input switch, and battery switch in order, and then turn on the battery switch, AC output switch, and DC input switch in sequence after 2 minutes. 2. If the alarm still exists, contact your installer.
69	1220	BDC Over Current Fault	1. If the fault is triggered accidentally, it may be due to temporary radiation interference. The inverter will automatically recover once the interference disappears. 2. If the fault is triggered frequently, restart the battery. 3. Turn off the AC output switch, DC input switch, and battery switch in order, and then turn on the battery switch, AC output switch, and DC input switch in sequence after 2 minutes. 4. If the fault still exists, contact your installer.
70	1223	BDC Hardware Overcurrent Fault	1. If the fault is triggered accidentally, it may be due to temporary radiation interference. The inverter will

Item	Fault Code	Statement	Solution
			automatically recover once the interference disappears. 2. If it is triggered continually, contact your installer.
71	1224	BDC3 Current Sampling Channel Fault	1. Shut down the battery and check the communications cable and power cable between the inverter and the battery are properly connected. 2. Turn off the AC output switch, DC input switch, and battery switch in order, and then turn on the battery switch, AC output switch, and DC input switch in sequence after 2 minutes. 3. If the fault still exists, contact your installer.
72	1229	BDC Overtemperature Fault	1. Check the ventilation and ambient temperature at the inverter installation position. 2. If the ventilation is poor or the ambient temperature exceeds the upper threshold, improve the ventilation and heat dissipation. 3. Check the whether heatsink is covered with dust. if is it, clean the heatsink. 4. If the ventilation and ambient temperature both meet requirements, contact your installer.
73	1237	BDC1 Current Sampling Channel Fault	1. Shut down the battery and check the communications cable and power cable between the inverter and the battery are properly connected. 2. Turn off the AC output switch, DC input switch, and battery switch in order, and then turn on the battery switch, AC output switch, and DC input switch in sequence after 2 minutes. 3. If the fault still exists, contact your installer.
74	1238	BDC2 Current Sampling	1. Shut down the battery and check the

Item	Fault Code	Statement	Solution
		Channel Fault	communications cable and power cable between the inverter and the battery are properly connected. 2. Turn off the AC output switch, DC input switch, and battery switch in order, and then turn on the battery switch, AC output switch, and DC input switch in sequence after 2 minutes. 3. If the fault still exists, contact your installer.
75	1241	BDC Soft Start Fault	1. Shut down the battery and check the communications cable and power cable between the inverter and the battery are properly connected. 2. Turn off the AC output switch, DC input switch, and battery switch in order, and then turn on the battery switch, AC output switch, and DC input switch in sequence after 2 minutes. 3. If the fault still exists, contact your installer.
76	1243	BDC transient Overvoltage Fault	1. Shut down the battery and check the communications cable and power cable between the inverter and the battery are properly connected. 2. Turn off the AC output switch, DC input switch, and battery switch in order, and then turn on the battery switch, AC output switch, and DC input switch in sequence after 2 minutes. 3. If the fault still exists, contact your installer.
77	1244	BDC Average Overvoltage Fault	1. Shut down the battery and check the communications cable and power cable between the inverter and the battery are properly connected. 2. Turn off the AC output switch, DC input switch, and battery switch in order, and then turn on the battery switch, AC output switch, and DC input

Item	Fault Code	Statement	Solution
			switch in sequence after 2 minutes. 3. If the fault still exists, contact your installer.
78	1249	External Communication Error	1. Check whether the communications cables between the inverter and the battery are properly connected. 2. Check whether the length of the communication cable exceeds the upper threshold in the specification, and whether it is shielded twisted pair with drain wire. 3. Restart the battery. 4. If the fault still exists, contact your installer.
79	1250	Internal Communication Error	1. Restart the battery. 2. If the fault still exists, contact your installer.
80	1251	Overvoltage Protection	1. Restart the battery. 2. If the fault still exists, contact your installer.
81	1252	Undervoltage Protection	1. Restart the battery. 2. If the fault still exists, contact your installer.
82	1253	Charging Overcurrent Protection	1. Restart the battery. 2. If the fault still exists, contact your installer.
83	1254	Discharging Overcurrent Protection	1. Restart the battery. 2. If the fault still exists, contact your installer.
84	1255	Cell Overtemperature Protection	1. Check the ventilation and ambient temperature at the battery installation position. 2. If the ventilation is poor or the ambient temperature exceeds the upper threshold, improve the ventilation and heat dissipation. 3. If the ventilation and ambient temperature both meet requirements, contact your installer.

Item	Fault Code	Statement	Solution
85	1256	Cell Undertemperature Protection	1. Check whether the ambient temperature at the battery installation position is higher than the lower threshold. 2. If the fault still exists, restart the battery. 3. If the fault still exists, contact your installer.
86	1257	BMS Cell Imbalance	1. Restart the battery. 2. If the fault still exists, contact your installer.
87	1258	Hardware Protection	1. Restart the battery. 2. If the fault still exists, contact your installer.
88	1259	Circuit Fault	1. Restart the battery. 2. If the fault still exists, contact your installer.
89	1261	Voltage Sensor Fault	1. Restart the battery. 2. If the fault still exists, contact your installer.
90	1262	Temperature Sensor Fault	1. Restart the battery. 2. If the fault still exists, contact your installer.
91	1263	Current Sensor Fault	1. Restart the battery. 2. If the fault still exists, contact your installer.
92	1264	Relay Fault	1. Restart the battery. 2. If the fault still exists, contact your installer.
93	1281	Communication Fault between Communication Board and Main DSP	1. Turn off the AC output switch, DC input switch, and battery switch in order, and then turn on the battery switch, AC output switch, and DC input switch in sequence after 2 minutes. 2. If the fault still exists, contact your installer.
94	1282	Communication Fault between Communication Board and Auxiliary DSP	
95	1283	Communication Fault between Communication	Shut down the battery and check the communication cables and power

Item	Fault Code	Statement	Solution
		Board and BMS	cable between the inverter and the battery are properly connected.
96	1284	Communication Fault between Communication Board and Built-in Meter	1. Turn off the AC output switch, DC input switch, and battery switch in order, and then turn on the battery switch, AC output switch, and DC input switch in sequence after 2 minutes. 2. If the fault still exists, contact your installer.
97	1285	Communication Fault between Communication Board and Grid Meter	Check whether the communication cables between the inverter and the Grid Meter are properly connected.
98	1286	Communication Board Flash Writing Fault	1. Turn off the AC output switch, DC input switch, and battery switch in order, and then turn on the battery switch, AC output switch, and DC input switch in sequence after 2 minutes. 2. If the fault still exists, contact your installer.
99	1287	RTC Read-Write Fault	
100	1288	Communication Fault between Communication Board and HUB Board	1. Check whether the communication cable between inverter and FOX Hub，also between inverters, are connected correctly. 2. Check whether the length of the communication cable exceeds the upper threshold in the specification，and whether it is shielded twisted pair with drain wire. 3. Turn off the AC output switch, DC input switch, and battery switch in order, and then turn on the battery switch, AC output switch, and DC input switch in sequence after 2 minutes. 4. If the fault still exists, contact your installer.
101	1289	Solar Meter Communication Fault	Check the communication cables of the Solar Meter are properly connected.
102	1290	GEN Meter	Check whether the communication

Item	Fault Code	Statement	Solution
		Communication Fault	cables of the GEN Meter are properly connected.
103	1291	Communication Fault between the Master and slave	Check whether the communication cables of the Master to Slave are properly connected.
104	1292	Meter's CT line fault	Check whether the CT cables of the Meter are properly connected.
105	1293	Meter's Voltage line fault	Check whether the voltage cables of the Meter are properly connected.
106	1294	AFCI fault lock device	You need to manually clear the fault or wait 24 hours
107	1295	Communication Fault between Communication Board and BMS	Shut down the battery and check the communication cables and power cable between the inverter and the battery are properly connected.
108	1296	Communication Fault between Communication Board and BMS	Shut down the battery and check the communication cables and power cable between the inverter and the battery are properly connected.
109	1303	Dehumidifier Communication Fault	Check if the communication between the inverter and the dehumidifier is normal.
110	1304	Combustible Gas Detector Communication Fault	Check if the communication between the inverter and the combustible gas detector is normal.
111	1305	Combustible Gas Fault	1. Check if the combustible gas content exceeds the limit. 2. Turn off the AC output switch, DC input switch, and battery switch in order. Then turn on the battery switch, AC output switch, and DC input switch in sequence after 2 minutes. 3. If the fault still exists, contact your installer.
112	1306	Water Ingress Fault	1. Check if water ingress has occurred (i.e., water has infiltrated the interior of the equipment). 2. Turn off the AC output switch, DC

Item	Fault Code	Statement	Solution
			input switch, and batter switch in order. Then turn on the battery switch, AC output switch, and DC input switch in sequence after 2 minutes. 3. If the fault still exists, contact your installer.
113	1307	Smoke Detector Fault	1. Check whether a fire has occurred or the smoke content exceeds the limit. 2. Turn off the AC output switch, DC input switch, and battery switch in order. Then turn on the battery switch, AC output switch, and DC input switch in sequence after 2 minutes. 3. If the fault still exists, contact your installer.
114	1308	Temperature Detector Fault	1. Check whether a fire has occurred or the ambient temperature is too high. 2. Turn off the AC output switch, DC input switch, and the battery switch in order. Then turn on the battery switch, AC output switch, and DC input switch in sequence after 2 minutes. 3. If the fault still exists, contact your installer.
115	1309	SN Fault	N/A
116	1310	Surge Protection Device Fault	N/A
117	1313	Mppt1 High Voltage Fault	1. Check whether all the PV cables are connected correctly. 2. Check whether the PV open voltage is higher than upper threshold of the specification. 3. Turn off the AC output switch, DC input switch, and battery switch in order, and then turn on the battery switch, AC output switch, and DC input switch in sequence after 5 minutes. 4. If the fault still exists, contact your installer.
118	1314	Mppt2 High Voltage Fault	
119	1315	Mppt3 High Voltage Fault	
120	1316	Mppt4 High Voltage Fault	
121	1317	Mppt5 High Voltage Fault	
122	1318	Mppt6 High Voltage Fault	
123	1319	Mppt7 High Voltage Fault	

Item	Fault Code	Statement	Solution
124	1320	Mppt8 High Voltage Fault	
125	1321	Mppt9 High Voltage Fault	
126	1322	Mppt10 High Voltage Fault	
119	1323	Mppt11 High Voltage Fault	
120	1324	Mppt12 High Voltage Fault	
121	1325	DC Input MPPT4 Access Fault	Check whether the PV cables are connected correctly. If they are, contact your installer.
122	1326	DC Input MPPT5 Access Fault	
123	1327	DC Input MPPT6 Access Fault	
124	1328	DC Input MPPT7 Access Fault	
125	1329	DC Input MPPT8 Access Fault	
126	1330	DC Input MPPT9 Access Fault	
127	1331	DC Input MPPT10 Access Fault	
128	1332	DC Input MPPT11 Access Fault	
129	1333	DC Input MPPT12 Access Fault	
130	1345	String1 Access Fault	1. Check whether PV cables are connected correctly. 2. Turn off the AC output switch, DC input switch, and battery switch in order, and then turn on the battery switch, AC output switch, and DC input switch in sequence after 5 minutes. 3. If the fault still exists, contact your installer.
131	1346	String2 Access Fault	
132	1347	String3 Access Fault	
133	1348	String4 Access Fault	
134	1349	String5 Access Fault	
135	1350	String6 Access Fault	

Item	Fault Code	Statement	Solution
136	1351	String7 Access Fault	
137	1352	String8 Access Fault	
138	1353	String9 Access Fault	
139	1354	String10 Access Fault	
140	1355	String11 Access Fault	
141	1356	String12 Access Fault	
142	1357	String13 Access Fault	
143	1358	String14 Access Fault	
144	1359	String15 Access Fault	
145	1360	String16 Access Fault	
146	1361	String17 Access Fault	
147	1362	String18 Access Fault	
148	1363	String19 Access Fault	
149	1364	String20 Access Fault	
150	1365	String21 Access Fault	
151	1366	String22 Access Fault	
152	1367	String23 Access Fault	
153	1368	String24 Access Fault	
154	1409	HUB Grid Overvoltage	1. If the fault is triggered accidentally, it may be due to temporary abnormalities in the power grid. The inverter will automatically recover once the power grid has resumed normal operation. 2. Check whether the on-grid voltage exceeds the upper threshold. If it is,

Item	Fault Code	Statement	Solution
			contact the local power operator. 3. If you have confirmed that the grid connection voltage exceeds the upper threshold and have obtained the consent from the local power operator, modify the overvoltage protection threshold.
155	1410	HUB Grid Undervoltage	1. If the fault is triggered accidentally, it may be due to temporary abnormalities in the power grid. The inverter will automatically recover once the power grid has resumed normal operation. 2. If the fault is triggered frequently, check whether the grid voltage is within the acceptable range. If it is not, contact the local power operator. If grid voltage is within the acceptable range, modify the power grid undervoltage protection threshold with the consent from the local power operator. 3. If the fault persists for a long time, check the connection between the AC switch and the output power cable.
156	1411	HUB Grid Voltage Overfrequency	1. If the fault is triggered accidentally, it may be due to temporary abnormalities in the power grid. The inverter will automatically recover once the power grid has resumed normal operation. 2. If the fault is triggered frequently, check whether the grid frequency is within the acceptable range. If it is not, contact the local power operator. If grid frequency is within the acceptable range, modify the grid overfrequency protection threshold with the consent from the local power operator.
157	1412	HUB Grid Voltage	1. If the fault is triggered accidentally, it

Item	Fault Code	Statement	Solution
		Underfrequency	may be due to temporary abnormalities in the power grid. The inverter will automatically recover once the power grid has resumed normal operation. 2. If the fault is triggered frequently, check whether the grid frequency is within the acceptable range. If it is not, contact the local power operator. If grid frequency is within the acceptable range, modify the grid overfrequency protection threshold with the consent from the local power operator.
158	1413	HUB Generator Overvoltage	1. If the fault is triggered accidentally, it may be due to temporary abnormalities in the Generator. The inverter will automatically recover after the power Generator has resumed normal operation. 2. Check whether the Generator voltage is normal. 3. If the fault still exists, contact your installer.
159	1414	HUB Generator Undervoltage	1. If the fault is triggered accidentally, it may be due to temporary abnormalities in the Generator. The inverter will automatically recover after the power Generator has resumed normal operation. 2. Check the connections between the Generator and the FOX Hub. 3. Check whether the Generator voltage is normal. 4. If the fault still exists, contact your installer.
160	1415	HUB Generator Voltage Overfrequency	1. If the fault is triggered accidentally, it may be due to temporary abnormalities in the Generator. The inverter will automatically recover after the power Generator has resumed

Item	Fault Code	Statement	Solution
			normal operation. 2. If the fault is triggered frequently, check whether the Generator frequency is within the acceptable range. 3. If the fault still exists, contact your installer.
161	1416	HUB Generator Voltage Underfrequency	1. If the fault is triggered accidentally, it may be due to temporary abnormalities in the Generator. The inverter will automatically recover after the Generator has resumed normal operation. 2. If the fault is triggered frequently, check whether the Generator frequency is within the acceptable range. 3. If the fault still exists, contact your installer.
162	1417	HUB Load Overvoltage	1. If the fault is triggered accidentally, it may be due to temporary radiation interference. The inverter will automatically recover once the interference disappears. 2. Turn off the AC output switch, DC input switch, and battery switch in order, and then turn on the battery switch, AC output switch, and DC input switch in sequence after 2 minutes. 3. If the fault still exists, contact your installer.
163	1418	HUB Load Undervoltage	1. If the fault is triggered accidentally, it may be due to temporary radiation interference. The inverter will automatically recover once the interference disappears. 2. Turn off the AC output switch, DC input switch, and battery switch in order, and then turn on the battery switch, AC output switch, and DC input

Item	Fault Code	Statement	Solution
			switch in sequence after 2 minutes. 3. If the fault still exists, contact your installer.
164	1419	HUB Load Voltage Overfrequency	1. If the fault is triggered accidentally, it may be due to temporary radiation interference. The inverter will automatically recover once the interference disappears. 2. Turn off the AC output switch, DC input switch, and battery switch in order, and then turn on the battery switch, AC output switch, and DC input switch in sequence after 2 minutes. 3. If the fault still exists, contact your installer.
165	1420	HUB Load Voltage Underfrequency	1. If the fault is triggered accidentally, it may be due to temporary radiation interference. The inverter will automatically recover once the interference disappears. 2. Turn off the AC output switch, DC input switch, and battery switch in order, and then turn on the battery switch, AC output switch, and DC input switch in sequence after 2 minutes. 3. If the fault still exists, contact your installer.
166	1421	HUB Grid Relay Short Circuit Fault	1. Turn off the AC output switch, DC input switch, and battery switch in order, turn off and then turn on the Manual switch on the Grid Relay. Then turn on the battery switch, AC output switch, and DC input switch in sequence after 2 minutes. 2. If the fault still exists, contact your installer.
167	1422	HUB Grid Relay Open Circuit Fault	1. Turn off the AC output switch, DC input switch, and battery switch in order, turn on and then turn off the Manual switch on the Grid Relay. Then

Item	Fault Code	Statement	Solution
			turn on the battery switch, AC output switch, and DC input switch in sequence after 2 minutes. 2. If the fault still exists, contact your installer.
168	1423	HUB Generator Relay Short Circuit Fault	1. Turn off the AC output switch, DC input switch, and battery switch in order, turn off and then turn on the Manual switch on the Generator Relay. Then turn on the battery switch, AC output switch, and DC input switch in sequence after 2 minutes. 2. If the fault still exists, contact your installer.
169	1424	HUB Generator Relay Open Circuit Fault	1. Turn off the AC output switch, DC input switch, and battery switch in order, turn on and then turn off the Manual switch on the Generator Relay. Then turn on the battery switch, AC output switch, and DC input switch in sequence after 2 minutes. 2. If the fault still exists, contact your installer.
170	1425	HUB Load Voltage Anomaly Fault	Check whether all the Loads Connections of the FOX Hub are correct.
171	1426	HUB and Inverter Communication Fault	1.Verify if the configuration of inverter numbers matches the actual number of inverters installed. 2. Check whether the communication cables between inverter and FOX Hub，also between inverters, are connected correctly. 3. Check whether the length of the communication cable exceeds the upper threshold in the specification，and whether it is shielded twisted pair with drain wire. 4. If steps 1 and 2 are both checked,turn off the AC output switch, DC input

Item	Fault Code	Statement	Solution
			switch, and battery switch in order, and then turn on the battery switch, AC output switch, and DC input switch in sequence after 2 minutes. If the fault still exists, contact your installer.
172	1427	HUB Overload Fault	Check if the total home loads exceed the specification.
173	1428	Inconsistent Settings of Paralleled Inverters in HUB Mode	Check if all the inverter's configurations are the same, such as "Country".
174	1429	HUB Overtemperature	1. Check the ventilation and ambient temperature at the FOX Hub installation position. 2. If the ventilation is poor or the ambient temperature exceeds the upper threshold, improve the ventilation and heat dissipation. 3. Check whether the heatsink is covered with dust. If it is, clean the heatsink. 4. If the ventilation and ambient temperature both meet requirements, contact your installer.
175	1430	Inconsistent Number of 485 and CAN Communications	1. Check whether the communication cables between inverter and FOX Hub，also between inverters, are connected correctly. 2. Check whether the length of the communication cable exceeds the upper threshold in the specification，and whether it is shielded twisted pair with drain wire. 3. If steps 1 and 2 are both checked,turn off the AC output switch, DC input switch, and battery switch in order, and then turn on the battery switch, AC output switch, and DC input switch in sequence after 2 minutes. If the fault still exists, contact your installer.

Item	Fault Code	Statement	Solution
176	1441	BDC1 Average Low Voltage Fault (Total battery voltage is below undervoltage value in non-charging mode)	1. Shut down the battery and check the communications cable and power cable between the inverter and the battery are properly connected. 2. Turn off the AC output switch, DC input switch, and battery switch in order, and then turn on the battery switch, AC output switch, and DC input switch in sequence after 2 minutes. 3. If the fault still exists, contact your installer.
177	1442	BDC2 Average Low Voltage Fault (Total battery voltage is below undervoltage value in non-charging mode)	1. Shut down the battery and check the communications cable and power cable between the inverter and the battery are properly connected. 2. Turn off the AC output switch, DC input switch, and battery switch in order, and then turn on the battery switch, AC output switch, and DC input switch in sequence after 2 minutes. 3. If the fault still exists, contact your installer.
178	1443	BDC3 Average Low Voltage Fault (Total battery voltage is below undervoltage value in non-charging mode)	1. Shut down the battery and check the communications cable and power cable between the inverter and the battery are properly connected. 2. Turn off the AC output switch, DC input switch, and battery switch in order, and then turn on the battery switch, AC output switch, and DC input switch in sequence after 2 minutes. 3. If the fault still exists, contact your installer.
179	1444	BDC1 Pre-charging Resistor Fault	1.Turn off the AC output switch, DC input switch, and battery switch in order, and then turn on the battery switch, AC output switch, and DC input switch in sequence after 2 minutes. 3. If the fault still exists, contact your installer.
180	1445	BDC2 Pre-charging Resistor Fault	
181	1446	BDC3 Pre-charging Resistor Fault	

Item	Fault Code	Statement	Solution
182	1447	Reversed Battery1 Polarity Connection Fault	Check whether the battery output is reversely connected.
183	1448	Reversed Battery2 Polarity Connection Fault	
184	1449	Reversed Battery3 Polarity Connection Fault	
185	1450	Battery1 Pre-charging Relay Fault	1. Shut down the battery and check the communications cable and power cable between the inverter and the battery are properly connected. 2. Turn off the AC output switch, DC input switch, and battery switch in order, and then turn on the battery switch, AC output switch, and DC input switch in sequence after 2 minutes. 3. If the fault still exists, contact your installer.
186	1451	Battery2 Pre-charging Relay Fault	
187	1452	Battery3 Pre-charging Relay Fault	
188	1456	BDC1 Self-checking Fault	1. Shut down the battery and check whether the communications cable and power cable between the inverter and the battery are properly connected. 2. Turn off the AC output switch, DC input switch, and battery switch in order, and then turn on the battery switch, AC output switch, and DC input switch in sequence after 2 minutes. 3. If the fault still exists, contact your installer.
189	1457	BDC2 Self-checking Fault	
190	1458	BDC3 Self-checking Fault	
191	1459	Battery1 Input Fault	1. Shut down the battery and check whether the power cable between the inverter and the battery are properly connected. 2. Turn off the AC output switch, DC input switch, and battery switch in order, and then turn on the battery switch, AC output switch, and DC input switch in sequence after 2 minutes. 3. If the fault still exists, contact your installer.
192	1460	Battery2 Input Fault	
193	1461	Battery3 Input Fault	

Item	Fault Code	Statement	Solution
194	1473	External Communication Error	1. Check whether the communications cables between the inverter and the battery are properly connected. 2. Check whether the length of the communication cable exceeds the upper threshold in the specification，and whether it is shielded twisted pair with drain wire. 3. Restart the battery. 4. If the fault still exists, contact your installer.
195	1474	Internal Communication Error	1. Restart the battery. 2. If the fault still exists, contact your installer.
196	1475	Overvoltage Protection	1. Restart the battery. 2. If the fault still exists, contact your installer.
197	1476	Undervoltage Protection	1. Restart the battery. 2. If the fault still exists, contact your installer.
198	1477	Charging Overcurrent Protection	1. Restart the battery. 2. If the fault still exists, contact your installer.
199	1478	Discharging Overcurrent Protection	1. Restart the battery. 2. If the fault still exists, contact your installer.
200	1479	Cell Overtemperature Protection	1. Check the ventilation and ambient temperature at the battery installation position. 2. If the ventilation is poor or the ambient temperature exceeds the upper threshold, improve the ventilation and heat dissipation. 3. If the ventilation and ambient temperature both meet requirements, contact your installer.
201	1480	Cell Undertemperature Protection	1. Check whether the ambient temperature at the battery installation position is higher than the lower

Item	Fault Code	Statement	Solution
			threshold. 2. If the fault still exists, restart the battery. 3. If the fault still exists, contact your installer.
202	1481	BMS Cell Imbalance	1. Restart the battery. 2. If the fault still exists, contact your installer.
203	1482	Hardware Protection	1. Restart the battery. 2. If the fault still exists, contact your installer.
204	1483	Circuit Fault	1. Restart the battery. 2. If the fault still exists, contact your installer.
205	1485	Voltage Sensor Fault	1. Restart the battery. 2. If the fault still exists, contact your installer.
206	1486	Temperature Sensor Fault	
207	1487	Current Sensor Fault	
208	1488	Relay Fault	
209	1505	External Communication Error	1. Check whether the communications cables between the inverter and the battery are properly connected. 2. Check whether the length of the communication cable exceeds the upper threshold in the specification，and whether it is shielded twisted pair with drain wire. 3. Restart the battery. 4. If the fault still exists, contact your installer.
210	1506	Internal Communication Error	1. Restart the battery. 2. If the fault still exists, contact your installer.
211	1507	Overvoltage Protection	
212	1508	Undervoltage Protection	
213	1509	Charging Overcurrent	

Item	Fault Code	Statement	Solution
		Protection	
214	1510	Discharging Overcurrent Protection	
215	1511	Cell Overtemperature Protection	1. Check the ventilation and ambient temperature at the battery installation position. 2. If the ventilation is poor or the ambient temperature exceeds the upper threshold, improve the ventilation and heat dissipation. 3. If the ventilation and ambient temperature both meet requirements, contact your installer.
216	1512	Cell Undertemperature Protection	1. Check whether the ambient temperature at the battery installation position is higher than the lower threshold. 2. If the fault still exists, restart the battery. 3. If the fault still exists, contact your installer.
217	1513	BMS Cell Imbalance	1. Restart the battery. 2. If the fault still exists, contact your installer.
218	1514	Hardware Protection	
219	1515	Circuit Fault	
220	1517	Voltage Sensor Fault	
221	1518	Temperature Sensor Fault	
222	1519	Current Sensor Fault	
223	1520	Relay Fault	

The copyright of this manual belongs to FOXESS CO., LTD. Any corporation or individual should not plagiarize, partially or fully copy (including software, etc.), and no reproduction or distribution of it in any form or by any means is permitted.
All rights reserved.
FOXESS CO., LTD.
Add: No. 939, Jinhai Third Road, New Airport Industry Area, Longwan District, Wenzhou, Zhejiang Province, China
Tel: 0510-68092998
WWW.FOX-ESS.COM

V1.2
10-500-10644-02