Ginlong Technologies Co., Ltd.
No. 57 Jintong Road, Binhai Industrial Park, Xiangshan, Ningbo,
Zhejiang, 315712, P.R.China.
Tel: +86 (0)574 6578 1806
Email:info@ginlong.com
Web: www.solisinverters.com

Please adhere to the actual products in case of any discrepancies in this user manual.

If you encounter any problem on the inverter, please find out the inverter S/N
and contact us, we will try to respond to your question ASAP.

Solis S6 Three Phase Inverter

S6-GC3P(25-36)K03 Installation and Operation Manual

Ver 1.0

Ginlong Technologies Co., Ltd.

Contents

1. Introduction 2
   1.1 Product Description 2
   1.2 Packaging 3
2. Safety Instructions 4
   2.1 Safety Symbols 4
   2.2 General Safety Instructions 4
   2.3 Notice For Use 5
   2.4 Notice for Disposal 5
3. Overview 6
   3.1 Front Panel Display 6
4. Product handing and storage 7
   4.1 Product handling 7
   4.2 Product Storage 8
5. Installation 9
   5.1 Select Location for the Inverter 9
   5.2 Mounting the Inverter 11
   5.3 Electrical Connections 13
6. Comm. & Monitoring 22
   6.1 Inverter monitoring connection 24
   6.2 DRM Connection/ Logic Interface Connection(only in Europe) 26
   6.3 Meter Connection 27
7. Commissioning 29
   7.1 Preparation 29
   7.2 APP Download 29
   7.3 Local Connection via APP 30
   7.4 Stop the Inverter 32
8. Operation 33
   8.1 Home Page 33
   8.2 Info Page 34
   8.3 Alarm Page 34
   8.4 Setting Page 35
9. Maintenance 42
10. Troubleshooting 43
11. Specifications 48

1.1 Product Description

Solis three phase inverter is suitable for utility-scale PV projects .
This manual covers the three phase inverter model listed below:
S6-GC3P25K03-NV-ND, S6-GC3P30K03-NV-ND, S6-GC3P33K03-NV-ND,
S6-GC3P36K03-NV-ND, S6-GC3P40K03-HV-ND, S6-GC3P15K03-LV-ND,
S6-GC3P20K03-LV-ND

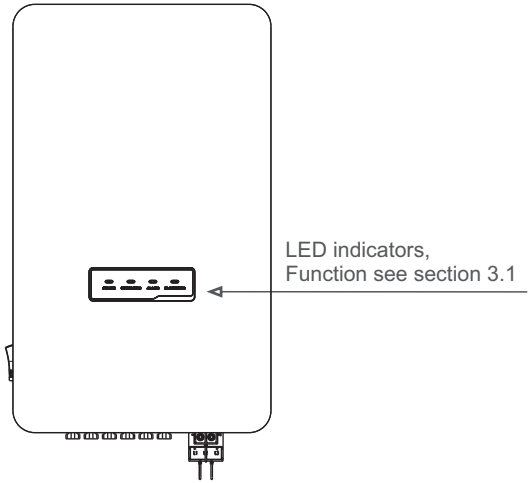

Figure 1.1 Front view

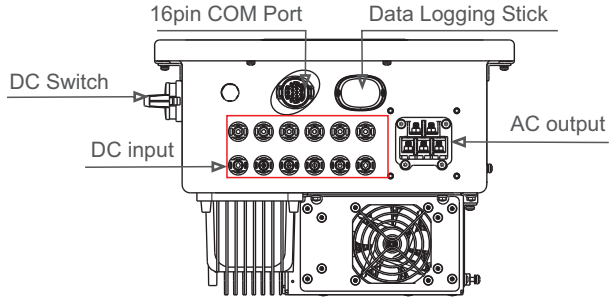

Figure 1.2 Bottom view

1.2 Packaging

When you receive the inverter, please ensure that all the parts listed below are included:

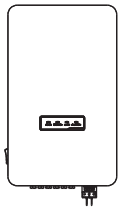
Inverter x1

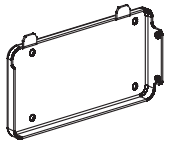
Back plate x1


Cross screws x2

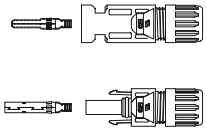
DC connectors x6

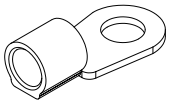
OT terminals x5

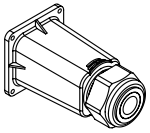
AC terminal cover x1

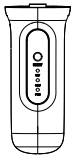
WiFi/GPRS Stick x1
(Optional)



Quick Installation
Manual x1

If anything is missing, please contact your local Solis distributor.

2.1 Safety Symbols

Safety symbols used in this manual, which highlight potential safety risks and important safety information, are listed as follows:

WARNING:
WARNING symbol indicates important safety instructions, which if not correctly followed, could result in serious injury or death.

NOTE:
NOTE symbol indicates important safety instructions, which if not correctly followed, could result in some damage or the destruction of the inverter.

CAUTION:
CAUTION, RISK OF ELECTRIC SHOCK symbol indicates important safety instructions, which if not correctly followed, could result in electric shock.

CAUTION:
CAUTION, HOT SURFACE symbol indicates safety instructions, which if not correctly followed, could result in burns.

2.2 General Safety Instructions

WARNING:
Please don't connect PV array positive(+) or negative(-) to ground, it could cause serious damage to the inverter.

WARNING:
Electrical installations must be done in accordance with the local and national electrical safety standards.

WARNING:
To reduce the risk of fire, over-current protective devices (OCPD) are required for circuits connected to the Inverter.
The DC OCPD shall be installed per local requirements. All photovoltaic source and output circuit conductors shall have disconnects that comply with the NEC Article 690, Part II. All Solis three phase inverters feature an integrated DC switch.

CAUTION:
Risk of electric shock. Do not remove cover. There is no user serviceable parts inside. Refer servicing to qualified and accredited service technicians.

CAUTION:
The PV array (Solar panels) supplies a DC voltage when they are exposed to sunlight.

CAUTION:
Risk of electric shock from energy stored in capacitors of the Inverter.
Do not remove cover for 5 minutes after disconnecting all power sources (service technician only). Warranty may be voided if the cover is removed without unauthorized.

CAUTION:
The surface temperature of the inverter can exceed 75℃ (167℉).
To avoid risk of burns, DO NOT touch the surface when inverter is operating.
The inverter must be installed out of reach of children.

WARNING:
High touch current. Earth connection essential before connecting supply.

Refer to the operating instructions.

2.3 Notice For Use

The inverter has been constructed according to the applicable safety and technical guidelines. Use the inverter in installations that meet the following specifications only:

1.Permanent installation is required.

2.The electrical installation must meet all the applicable regulations and standards.

3.The inverter must be installed according to the instructions stated in this manual.

4.The inverter must be installed according to the correct technical specifications.

5.To startup the inverter, the Grid Supply Main Switch (AC) must be switched on, before the solar panel's DC isolator shall be switched on. To stop the inverter, the Grid Supply Main Switch (AC) must be switched off before the solar panel's DC isolator shall be switched off.

2.4 Notice for Disposal

This product shall not be disposed of with household waste. They should be segregated and brought to an appropriate collection point to enable recycling and avoid potential impacts on the environment and human health. Local rules in waste management shall be respected .

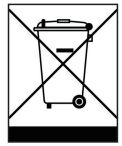

3. Overview

3.1 Front Panel Display

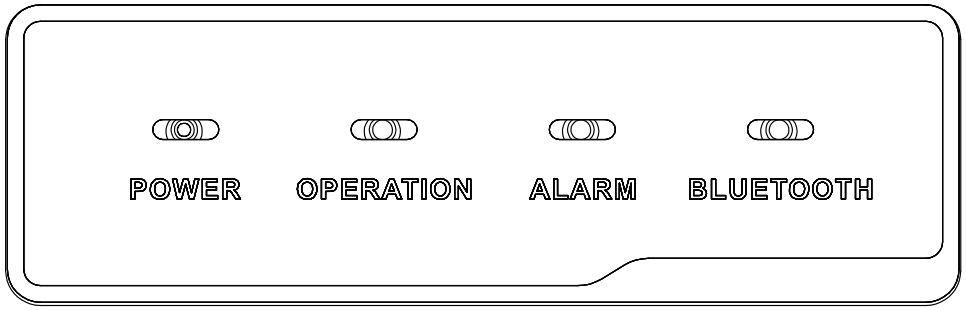

	Light	Status	Description
1	. POWER	ON	The inverter can detect DC power.
		OFF	No DC power or low DC power.
2	. OPERATIO N	ON	The inverter is operating properly.
		OFF	The inverter has stopped to supply power.
		Flashing	The inverter is initializing.
3	. ALARM	ON	Alarm or fault condition is detected.
		OFF	The inverter is operating without fault or alarm.
4	. BLUETOO	ON	Bluetooth Port is working.
		OFF	Bluetooth Port is not working.

4. Product handing and storage

4.1 Product handling

Please review the instruction below for handling the inverter:

1. The red circles below denote cutouts on the product package.
Push in the cutouts to form handles for moving the inverter (see Figure 4.1).

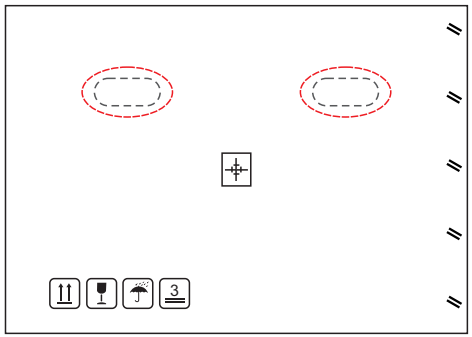

Figure 4.1 move the inverter

2.Open the carton, then two people handle both sides of inverter through the area denoted dotted line. (see figure 4.2).

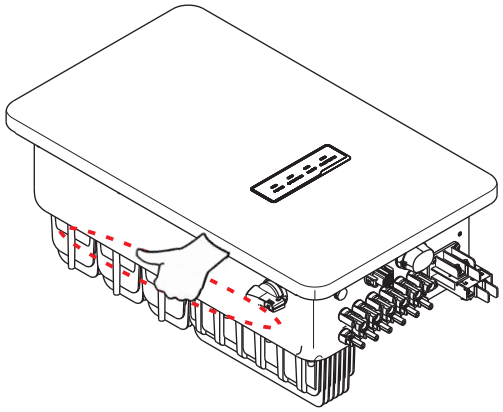

Figure 4.2 Inverter handles

NOTE:
Be careful to lift the inverter. The weight is around 27kg.

4. Product handing and storage

4.2 Product Storage

If the inverter is not to be installed immediately, storage instructions and environmental conditions are below:

- Use the original box to repackage the inverter, seal with adhesive tape with the desiccant inside the box.
- Store the inverter(s) in a clean and dry place, free of dust and dirt.
- Storage temperature must be between -40℃ and 70℃ and the humidity should be between 0 and 95% non-condensing.
- Stack no more than three (3) inverters high.
- Keep box(es) away from corrosive materials to avoid damage to the inverter enclosure.
- Inspect packaging regularly. If packaging is damaged(wet, pest damage, etc), repackage the inverter immediately.
- Store the inverter(s) on a flat, hard surface - not inclined or upside down.
- After long-term storage, the inverter needs to be fully examined and tested by qualified service or technical personnel before using.
- Restarting after a long period of non-use requires the equipment to be inspected and, in some cases, the removal of oxidation and dust that has settled inside the equipment will be required.

5. Installation

5.1 Select a Location for the Inverter

To select a location for the inverter, the following criteria should be considered:

WARNING: Risk of fire

Despite careful construction, electrical devices can cause fires.

- Do not install the inverter in areas containing highly flammable materials or gases.
- Do not install the inverter in potentially explosive atmospheres.
- The mounting structure where the inverter is installed must be fireproof.

- Do not install in small closed spaces where air can not circulate freely. To avoid overheating, always make sure the flow of air around the inverter is not blocked.
- Exposure to direct sunlight will increase the operational temperature of the inverter and may cause output power limiting. Ginlong recommends inverter installed to avoid direct sunlight or raining.
- To avoid over heating ambient air temperature must be considered when choosing the inverter installation location. Ginlong recommends using a sun shade minimizing direct sunlight when the ambient air temperature around the unit exceeds 104°F/40°C.
- Comply with local installation regulations.

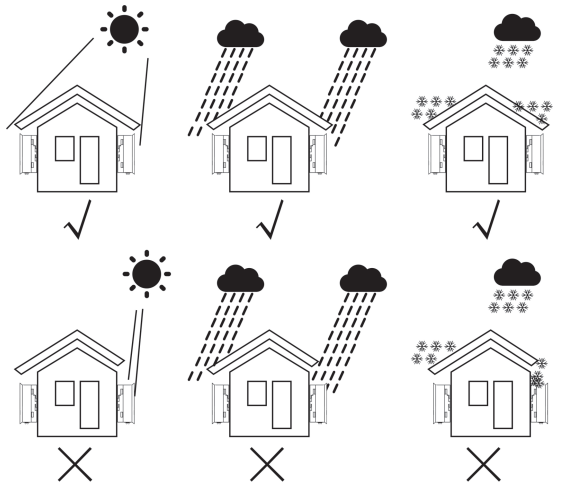

Figure 5.1 Recommended Installation locations

NOTE:

Nothing should be stored on or placed against the inverter.

5. Installation

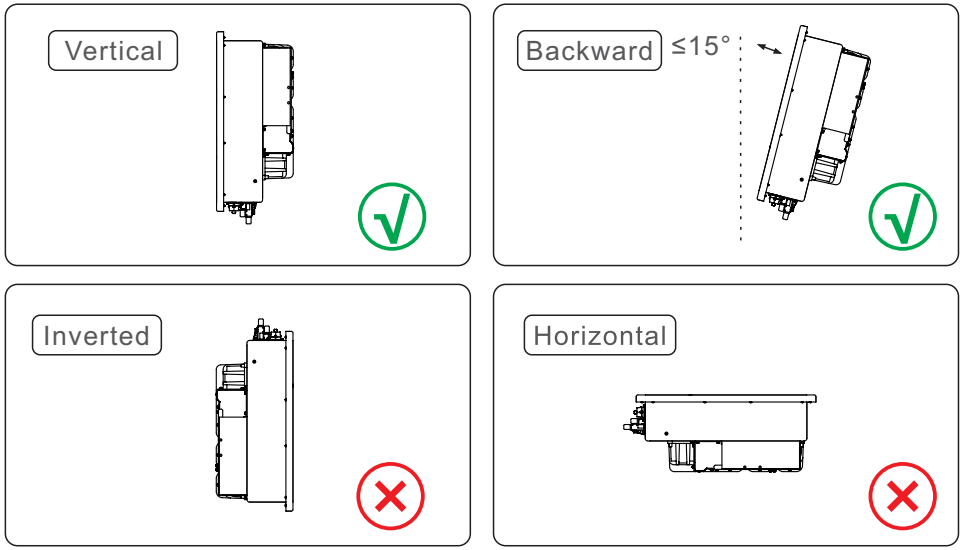

- Install on a vertical surface or structure capable of bearing the weight.
- Please install the inverter vertically. If the inverter cannot be mounted vertically, it may be tilted backward to 15 degrees from vertical.
- For multiple inverters are installed on site, a minimum clearance of 500mm,should be kept between each inverter and any other mounted equipment. The bottom of the inverter must be at least 500mm from the ground or floor. See figure 5.2.
- Visibility of the LED status indicator lights and LCD display screen should be considered.

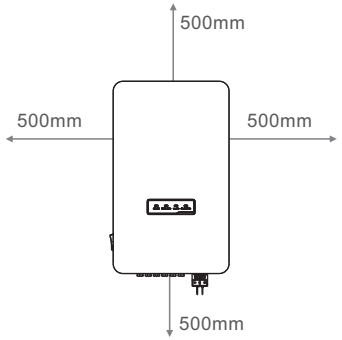

Figure 5.2 Inverter Mounting clearance

5.2 Mounting the Inverter

Back hanging plate size:

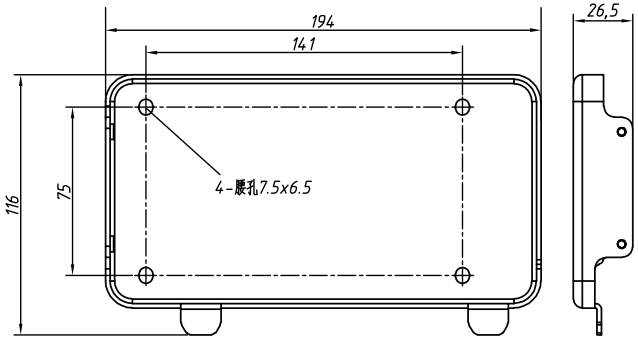

Figure 5.3 Inverter wall mounting

Refer to figure 5.4 and figure 5.5. Inverter shall be mounted vertically.
The steps to mount the inverter are listed below.

1. Refer to Figure 5.4, the holes for expansion bolt based on the hole diameter of bracket (M10*70) , using the percussion drilling with the 10mm drill need to stay vertically on the wall. And the drill hole must be vertically on the wall. And all drill holes' depth is 60mm.
2. Make sure the bracket is horizontal. And the mounting holes (in Figure 5.4) are marked correctly. Drill the holes into wall at your marks.
3. Use the suitable expansion screws to fix the bracket on the wall.

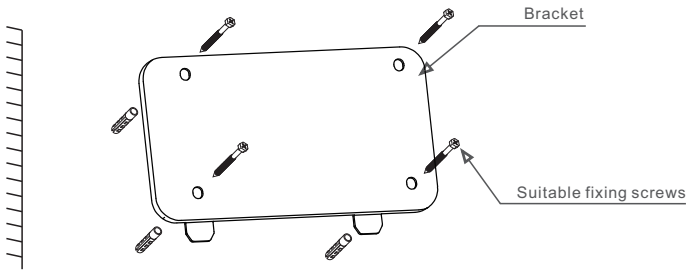

Figure 5.4 Inverter wall mounting

WARNING:
The inverter must be mounted vertically.

4. Lift the inverter and hang it on the bracket, and then slide down to make sure they match perfectly.

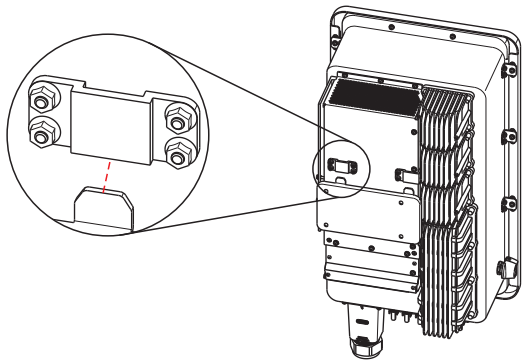

Figure 5.5 Install the inverter

5. If the installation position is high, the inverter cannot be directly mounted on the mounting plate, and the hoisting rope is hoisted through the two lifting holes.
(The rope needs to meet the load-bearing requirements of this product) .

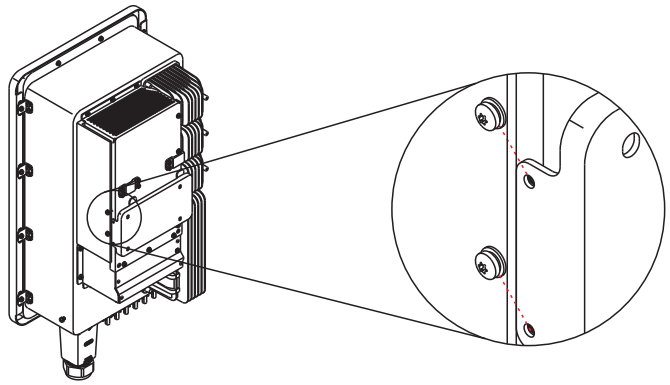

Figure 5.6

5. Installation

5.3 Electrical Connections

Inverter designs quick-connect terminal, so top cover needn't open during electrical connection. The sign meaning located the bottom of inverter, as shown below in table 5.1. All electrical connections are suit for the local or national standard.

DC 1 ~ DC 6	DC input terminal
ON	Switch on the DC switch
OFF	Switch off the DC switch
16pin COM Port	COM port for monitoring
	COM port for Meter
	COM Port for DRM(only in Europe)

Table 5.1 Electrical connection symbols

The electrical connection of the inverter must follow the steps listed below:

1. Switch the Grid Supply Main Switch (AC) OFF.
2. Switch the DC Isolator OFF.
3. Connect the inverter to the grid.
4. Assemble PV input connector to the Inverter.

5.3.1 Grounding

To effectively protect the inverter, two grounding methods must be performed.
Connect the AC grounding cable (Please refer to section 5.3.3)
Connect the external grounding terminal.

To connect the grounding terminal on the heat sink, please follow the steps below:

1. Prepare the grounding cable: recommend to use the ⩾ 16mm^2 outdoor copper-core cable.
2. Prepare OT terminals: M6.

Important:
For multiple inverters in parallel , all inverters should be connected to the same ground point to eliminate the possibility of a voltage potential existing between inverter grounds.

5. Installation

3. Strip the ground cable insulation to a suitable length(see Figure 5.7).

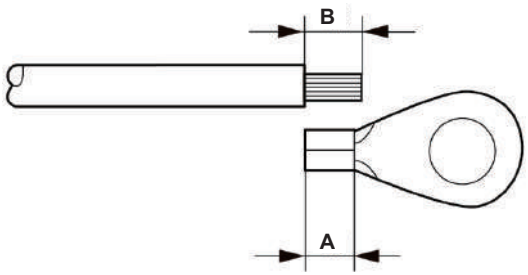

Figure 5.7 Suitable length

Important:
B (insulation stripping length) is 2mm~3mm longer than A (OT cable terminal crimping area) 2mm~3mm.

4. Insert the stripped wire into the OT terminal crimping area and use the hydraulic clamp to crimp the terminal to the wire (see Figure 5.8).

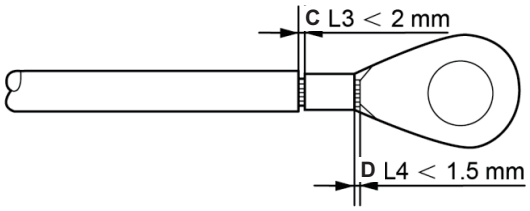

Figure 5.8 Strip wire

Important:
After crimping the terminal to the wire, inspect the connection to ensure the terminal is solidly crimped to the wire.

5. Remove the screw from the heat sink ground point.
6. Connect the grounding cable to the grounding point on the heat sink,and tighten the grounding screw, Torque is 3-4Nm(see figure 5.9).

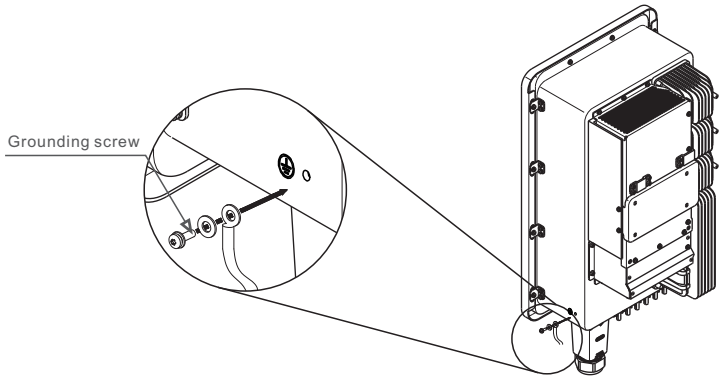

Figure 5.9 Fixed cable

Important:
For improving anti-corrosion performance,
after ground cable installed, apply silicone or paint is preferred to protect.

5.3.2 Connect PV side of inverter

The electrical connection of the inverter must follow the steps listed below:

1. Switch the Grid Supply Main Switch (AC) OFF.
2. Switch the DC Isolator OFF.
3. Assemble PV input connector to the Inverter.

Before connecting inverter, please make sure the PV array open circuit voltage is within the limit of the inverter.

NOTE:
Before connection, please make sure the polarity of the output voltage of PV array matches the DC+ and DC- symbols.

5. Installation

WARNING:
Please don't connect PV array positive or negative pole to the ground, it could cause serious damages to the inverter.

Please complete the assembling of the DC cable according to below procedures:

Step 1: Choose a proper DC cable and strip about 7+/-0.5mm, refer to the following table for specifications.

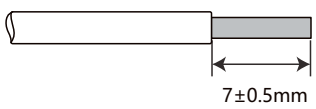

Cable type	Cross section(mm²)	
	Range	Recommended value
Industry generic PV cable (model:PV1-F)	4.0~6.0 (10~8AWG)	4.0(10AWG)

Figure 5.10 Strip

Step 2: take out the DC connector from the accessory bag, rotate the nut to remove it and take out the waterproof rubber ring.

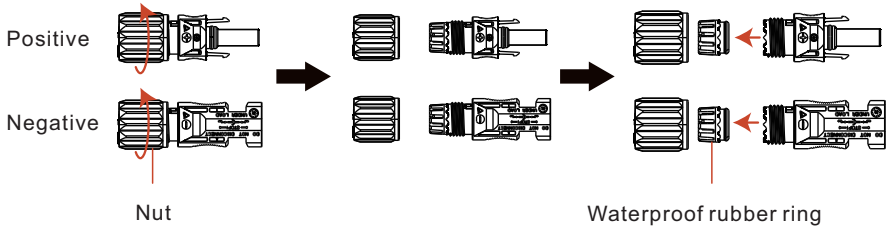

Figure 5.11 Remove the cover of the terminal connector

Step 3: Pass the stripped DC cable through the nut and waterproof rubber ring.

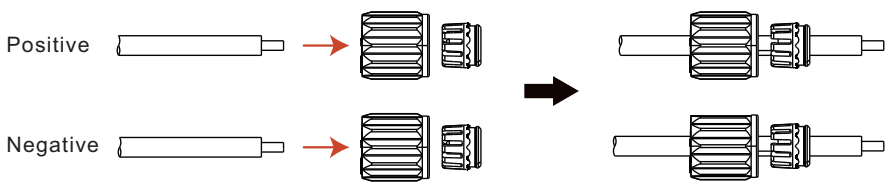

Figure 5.12 Pass the cable trough

Step 4: Connect the conductor part of the DC cable to the metal DC terminal and press it with the DC terminal crimping tool.

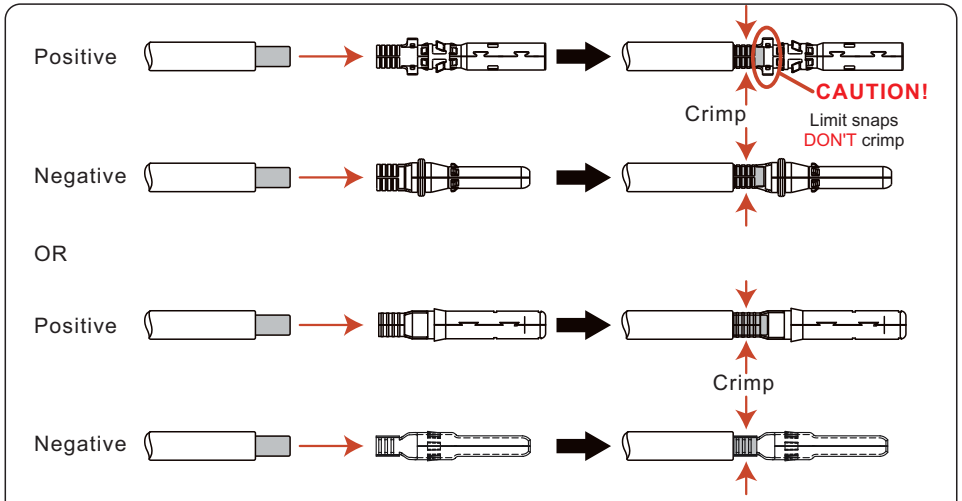

Figure 5.13 Crimp

Step 5: Insert the crimped DC cable firmly into the DC terminal, then insert the waterproof rubber ring into the DC terminal and tighten the nut.

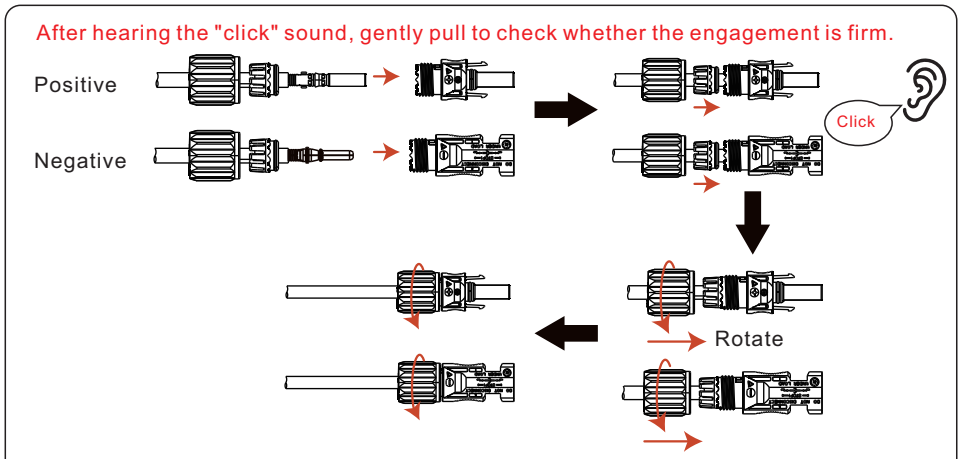

Figure 5.14 Assemble the cover of the terminal connector

Step 6: Use a multimeter to measure the DC input voltage and verify the polarity of the DC input cable.

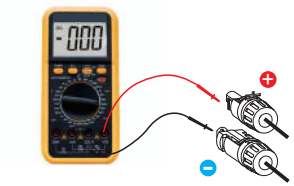

Figure 5.15 multi-meter measurement

Step 7: Connect the assembled DC terminal to the inverter as shown in the figure, and a slight "click" will be heard, proving that the connection is correct.

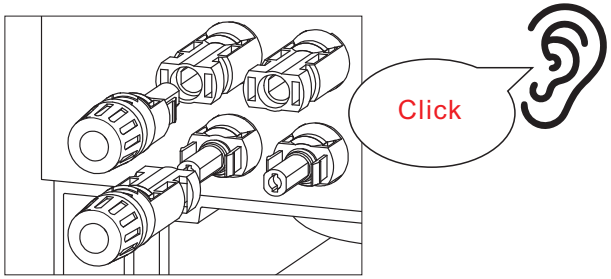

Figure 5.16 connect to the inverter

CAUTION:

If DC inputs are accidently reversely connected or inverter is faulty or not working properly, it is NOT allowed to turn off the DC switch. Otherwise it may cause DC arc and damage the inverter or even lead to a fire disaster.

The correct actions are:

*Use a clip-on ammeter to measure the DC string current.

*If it is above 0.5A, please wait for the solar irradiance reduces until the current decreases to below 0.5A.

*Only after the current is below 0.5A, you are allowed to turn off the DC switches and disconnect the PV strings.

* In order to completely eliminate the possibility of failure, please disconnect the PV strings after turning off the DC switch to aviod secondary failures due to continuous PV energy on the next day.

Please note that any damages due to wrong operations are not covered in the device warranty.

5. Installation

5.3.3 Connect grid side of inverter

For the AC connection, 6-25mm^2 cable is required to be used.

Please make sure the resistance of cable is lower than 1.5ohm.

Cable specification		Copper-cored cable
Traverse cross sectional area (mm^2)	Range	6~25
	Recommended	25
Cable outer diameter (mm)	Range	13~25
	Recommended	25

NOTE:

For reliable connection, recommend customer select corresponding Euro type connectors based on wiring specification to connect the terminal.

NOTE:

Considering max 3% AC voltage drop, if AC cable length is below the parameter in following diagram, the recommended 6.0mm2 AC cable can be used. If AC cable length is higher, please consider to use AC cable with larger cross-sectional area. Max 3% AC voltage drop is for reference only, please follow the local electrical regulation to calculate the suitable AC cable specification.

Inverter	Maximum AC cable length (m)
S6-GC3P25K03-NV-ND	245
S6-GC3P30K03-NV-ND	200
S6-GC3P33K03-NV-ND	185
S6-GC3P36K03-NV-ND	170
S6-GC3P40K03-HV-ND	220
S6-GC3P15K03-LV-ND	120
S6-GC3P20K03-LV-ND	90

The steps to assemble the AC grid terminals are listed as follows:

1. Strip the end of AC cable insulating jacket about 80mm then strip the end of each wire. (as shown in figure 5.17)

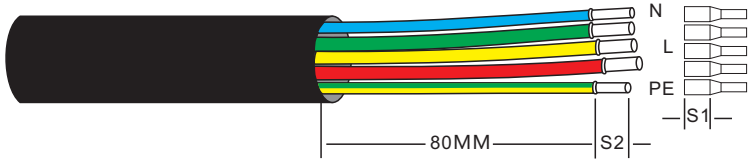

Figure 5.17 Strip AC cable

NOTE:
S2 (insulation stripping length) should be as long as S1
(AC terminal cable compression area).

2. Strip the insulation of the wire past the cable crimping area of the OT terminal, then use a hydraulic crimp tool to crimp the terminal. The crimped portion of the terminal must be insulated with heat shrinkable tube or insulating tape.
3. Leave the AC breaker disconnected to ensure it does not close unexpectedly.
4. Remove the 4 screws on the inverter junction box and remove the junction box cover .
5. Insert the cable through the nut, sheath, and AC terminal cover. Connect the cable to the AC terminal block in turn, using a socket wrench. Tighten the screws on the terminal block. The torque is 3~4Nm (as shown in Figure 5.18).

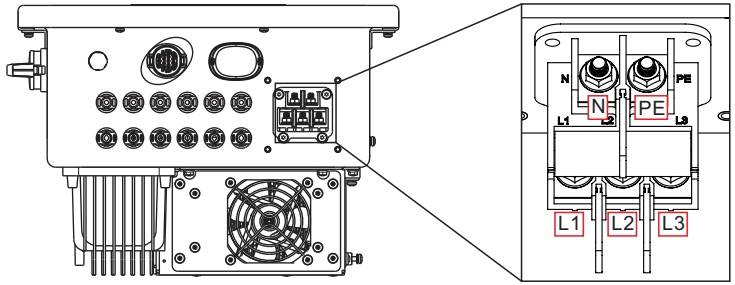

Figure 5.18 wiring

NOTE
Solis three phase inverters integrate neutral connection point.
However, with or without neutral connected won't affect the normal operation of inverter itself. Please refer to the local grid requirement if need neutral cable connected.

5.3.4 Inverter monitoring connection

The inverter can be monitored via Wi-Fi or GPRS. All Solis communication devices are optional (Figure 5.19). For connection instructions, please refer to the Solis Monitoring Device installation manuals.

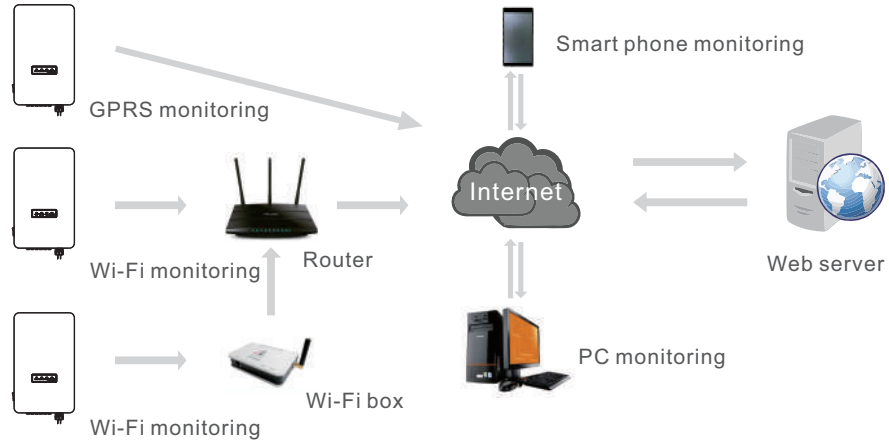

Figure 5.19 Wireless communication function

5.3.5 Max. over current protection device (OCPD)

To protect the inverter's AC grid connection conductors, Solis recommends installing breakers that will protect against overcurrent. The following table defines OCPD ratings for the inverters.

Inverter	Rated voltage(V)	Rated output current (Amps)	Current for protection device (A)
S6-GC3P25K03-NV-ND	220/380,230/400	38.0/36.1	63
S6-GC3P30K03-NV-ND	220/380,230/400	45.6/43.3	63
S6-GC3P33K03-NV-ND	220/380,230/400	50.1/47.6	63
S6-GC3P36K03-NV-ND	220/380,230/400	54.7/52.0	63
S6-GC3P40K03-HV-ND	480	48.1	63
S6-GC3P15K03-LV-ND	220/230	39.4/37.7	63
S6-GC3P20K03-LV-ND	220/230	52.5/50.2	63

Table 5.1 Rating of grid OCPD

There are 2 communication ports on the inverter.
One is a USB COM port and the other is a 16-Pin COM port.
The USB COM port is used to connect Solis datalogging sticks
(Please refer to manuals of Solis datalogging sticks for details).
The 16-Pin COM port is used for multiple inverter daisy chain connection/DRM connection (Only in Europe)/Logic Interface Connection/Meter connection.

The inverter package will include a 16-Pin COM connector to be used on this 16-Pin COM port. The Pin definition is shown below. Facing the connector, Pin 1 is on the left of the first row. The rest polarity is showing in below diagram.

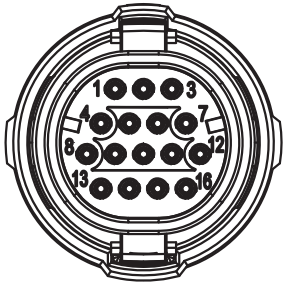

Figure 6.1 16pin COM Connector

PIN	Definition	PIN	Definition	Description
1	METER-A/RS485-2A	9	DRM1/5	PIN1, 2 RS485-2 or METER(as default)
2	METER-B/RS485-2B	10	DRM2/6	
3	/	11	DRM3/7	/
4	/	12	DRM4/8	
5	RS485-1A IN	13	RrfGen	PIN5, 6, 7, 8 2 pairs of RS485-1 Used for hand-by-hand connection with EPM device
6	RS485-1B IN	14	GND	
7	RS485-1A OUT	15	+12V OUT	
8	RS485-1B OUT	16	GND	

Europe

PIN	Definition	PIN	Definition	Description
1	METER-A/RS485-2A	9	/	PIN1, 2 RS485-2 or METER(as default)
2	METER-B/RS485-2B	10	/	
3	/	11	/	/
4	/	12	/	
5	RS485-1A IN	13	/	PIN5, 6, 7, 8 2 Pairs of RS485-1 Used for hand-by-hand connection with EPM device
6	RS485-1B IN	14	/	
7	RS485-1A OUT	15	/	
8	RS485-1B OUT	16	/	

Except Europe

6. Comm. & Monitoring

The following is the assembly diagram of the 16-Pin COM connector.

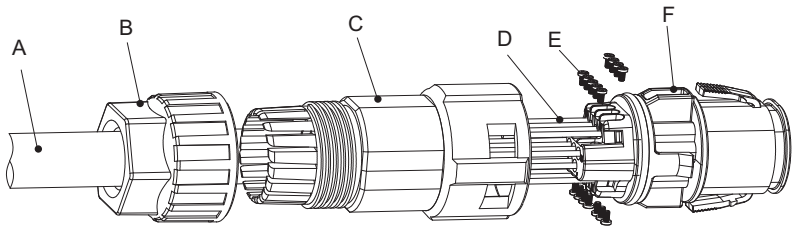

Figure 6.2

A-Main cable (Diameter: 4-6mm)
B-Locking Nut (Torque: 3.5-4N.m)
C- Sleeve
D-COM Wire (Dimension: 0.75-3mm², stripping length: 10-12mm)
E-Locking Screw (Torque: 0.4-0.6N.m)
F-Connector

Connect Steps:
1. Lead the main cable through the locking nut and the sleeve.
2. Strip the COM wires and insert into corresponding pin terminals.
Then fasten the locking screws for the pin terminals.
3. Push the sleeve onto the connector and fasten the locking nut on the end of the sleeve.
4. Connect the connector to the 16-Pin COM port at the bottom of the inverter.

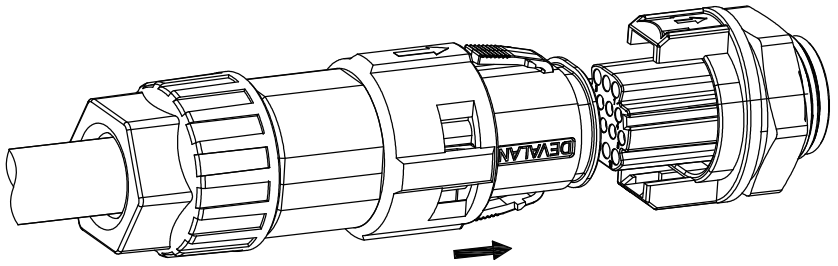

Figure 6.3

Disconnect Steps:
1. Press the button on both sides of the connector and pull the connector to disconnect from the COM port.

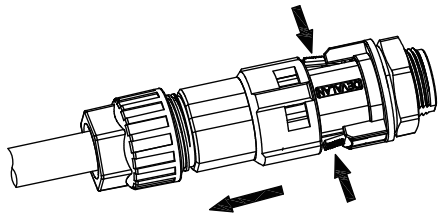

Figure 6.4

2. Use the unlock tool to insert into the groove on the sleeve and pull the sleeve to disconnect from the connector.

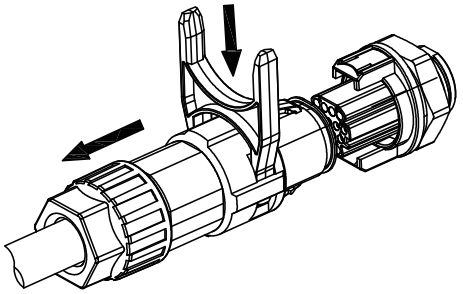

Figure 6.5

6.1 Inverter monitoring connection

Solis can provide optional accessories such as one-to-one datalogging sticks including WiFi stick, GPRS stick and LAN stick for the monitoring of a single inverter or one-to-multiple datalogging boxes including WiFi box and GPRS Box for the monitoring of multiple inverters. Please refer to corresponding manuals for details.

6.1.1 Monitoring for a single inverter

Every inverter can connect a Solis one-to-one datalogging stick for remote monitoring purpose. The datalogging stick should be directly connected to the USB COM port at the bottom of the inverter. It is a simple plug and play design with fast installation time. Details and the rest configuration process please refer to the datalogging stick manual.

6. Comm. & Monitoring

6.1.2 Monitoring for multiple inverters

When multiple inverters need to run daisy chain communication together, Pin3/4 and Pin6/7 of the 16-Pin COM Port can be used.

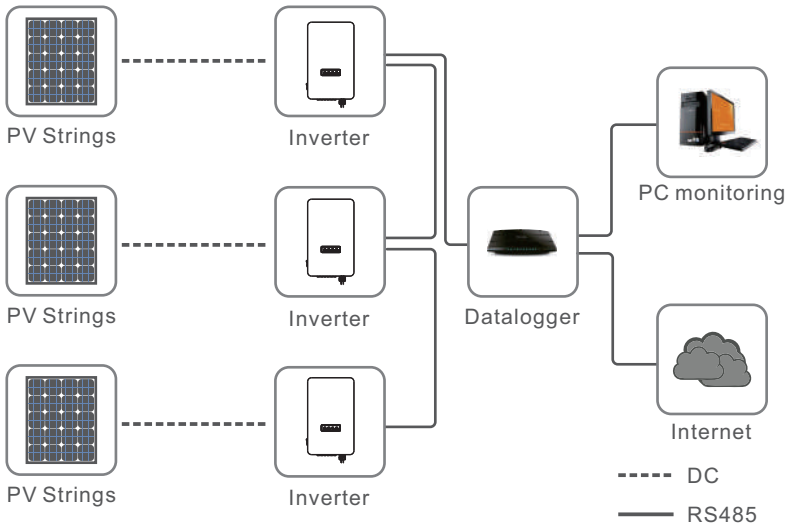

Figure 6.6 Multiple inverter monitoring system(RS485)

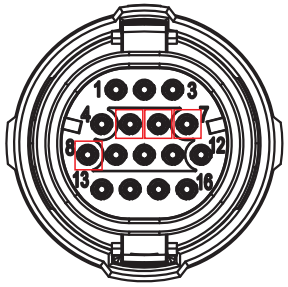

Pin	Definition
5	RS485-1A IN
6	RS485-1B IN
7	RS485-1A OUT
8	RS485-1B OUT

Figure 6.7

6.2 DRM Connection/ Logic Interface Connection(only in Europe)

The AS/NZS 4777.2:2020 requires inverters to support demand response modes (DRM). Solis Australian version inverters fully comply with the DRM requirements in AS/NZS 4777 .2:2015. The pin definition is showing below. For details on the working logic, please refer to the standard document of AS/NZS 4777.2:2020. The DRM controlling device is not in the scope of supply of Solis.

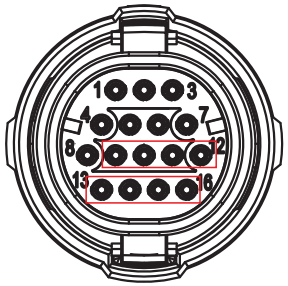

Pin	Definition	Pin	Definition
9	DRM1/5	13	RefGen
10	DRM 2/6	14	GND
11	DRM 3/7	15	+12V OUT
12	DRM 4/8	16	GND

Figure 6.8

Some European countries may require a simply logic interface relay or contactor switch to operate the RUN/STOP of inverters. For Solis European version inverters, the Pin 13 and Pin 14 can be used to perform the control logic (Not available in South Africa).
The logic interface relay or contactor switch is not in the scope of supply of Solis.
When the relay is closed (Short between Pin13 and Pin14), the inverter can operate normally.
When the relay is opened (Open between Pin13 and Pin14), the inverter will reduce its output power to zero within 5s.

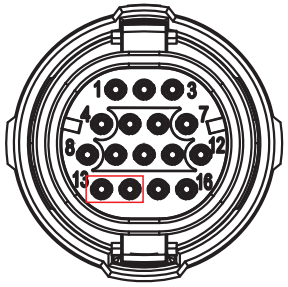

Pin	Definition
13	RefGen
14	GND

Figure 6.9

6.3 Meter Connection

The inverter can work with a three phase smart meter to achieve Export Power Management function and/or 24hour consumption monitoring function.
The Pin 1 and Pin 2 of the 16-Pin COM port are used for Meter RS485 communication or as the 2nd RS485 for 3rd-party controller or monitoring platform.

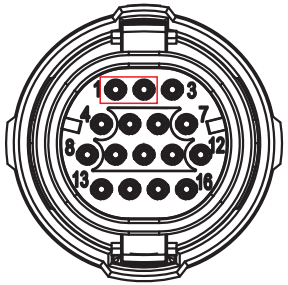

Pin	Definition
1	METER-A/RS485-2A
2	METER-B/RS485-2B

Figure 6.10

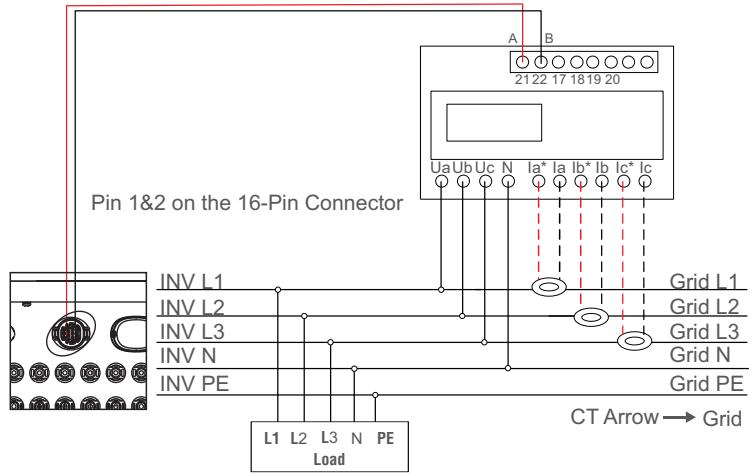

Figure 6.11 External CT Type Meter - “Meter in Grid”

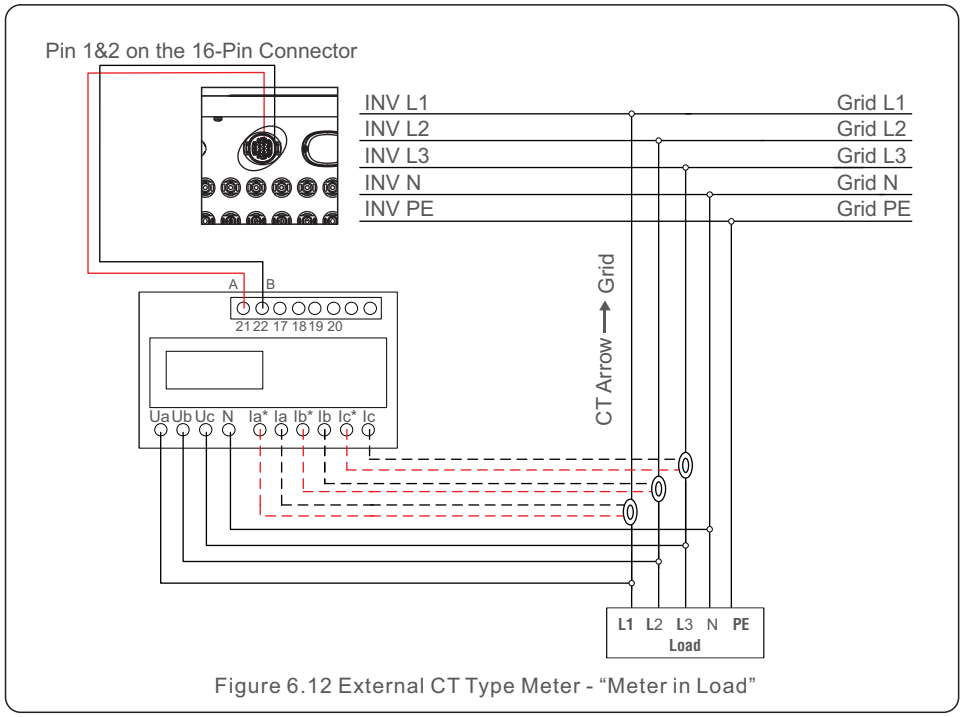

Figure 6.12 External CT Type Meter - “Meter in Load”

7.1 Preparation

- Ensure all the devices are accessible for operation, maintenance and service.
- Check and confirm that the inverter is firmly installed.
- Space for ventilation is sufficient for one inverter or multiple inverters.
- Nothing is left on the top of the inverter.
- Inverter and accessories are correctly connected.
- Cables are routed in safe place or protected against mechanical damage.
- Warning signs and labels are suitably affixed and durable.
- An Android or IOS mobile phone with Bluetooth function is available.
- Measure DC voltage of PV strings and ensure the polarity is correct.
- Measure AC voltage and frequency and ensure they are within local standard.

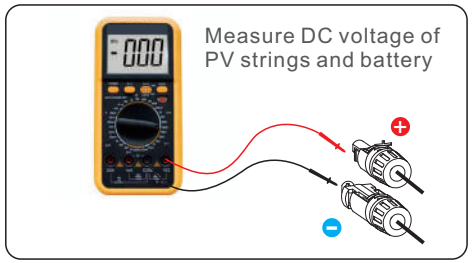

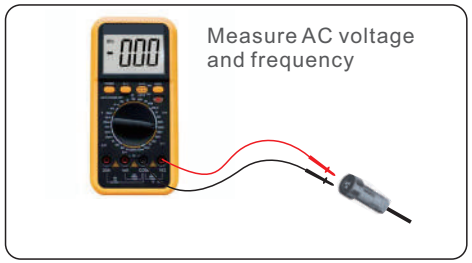

7.2 APP Download

Users need to download the APP before installing it for the first time.
There are three ways to download and install the latest APP:
1. You can visit **www.soliscloud.com** to download the latest version APP.
2. You can search “**Soliscloud**” in Google Play or App Store.
3. You can scan this QR code below to download "**Soliscloud**".

7.3 Local Connection via APP

Step 1: **Rotate the inverter DC switch from OFF to ON.**

Step 2: **APP Bluetooth connection with inverter.**

Turn on Bluetooth switch on your mobile phone and then open the Soliscloud APP.

Click “More Tools”->”Local Operation”->”Connect with Bluetooth”

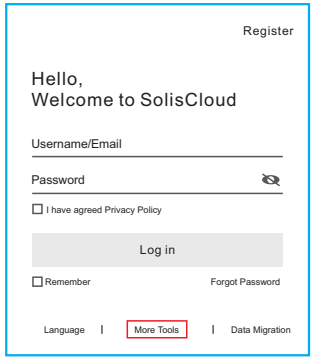

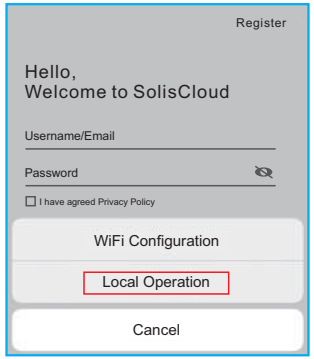

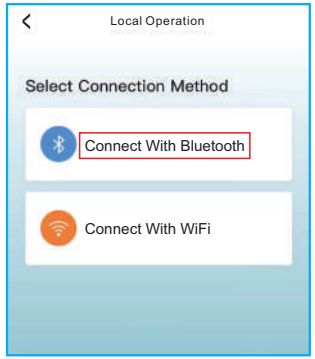

Select the Bluetooth signal from the inverter. (Bluetooth Name: INV-Inverter SN)



Step 3: **Login account.**

If you are the installer, please select the account type as Installer. If you are the plant owner, please select the account type as owner. Then set your own initial password for control verification. (The first log-in must be finished by installer in order to do the initial set up)

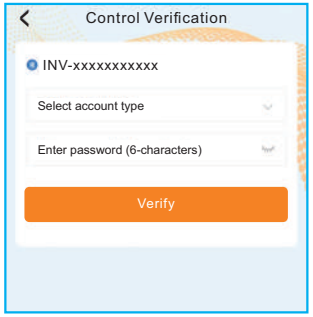

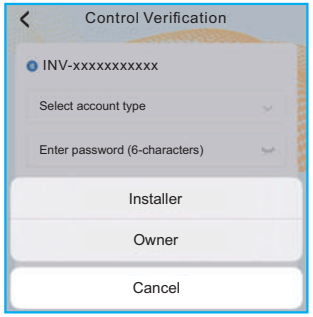

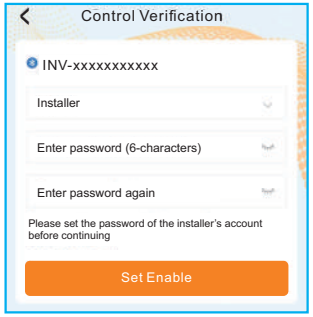

7. Commissioning

Step 4: **Grid Code Setting.**

After login in, the grid code setting will pop up.

Select "Confirm" will automatically choose the "Custom50" by default.

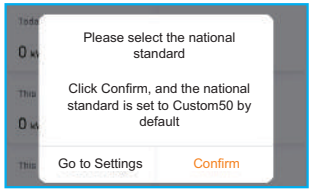

If the default standard doesn't meet the local grid requirement:

Select **“Settings->Grid Parameter Setting->Grid Code Setting->Grid Code”**, choose the applicant standard according to the installation and save.

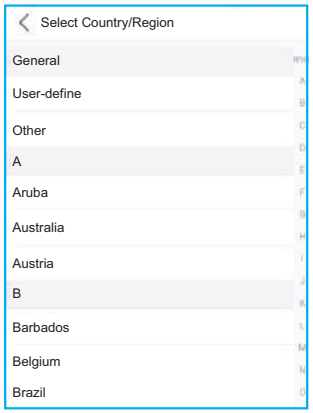

The specific parameters can be set at Grid Code Setting page.
Mention that the grid parameters modification should be permissible by utility grid company or the power distribution supplier.

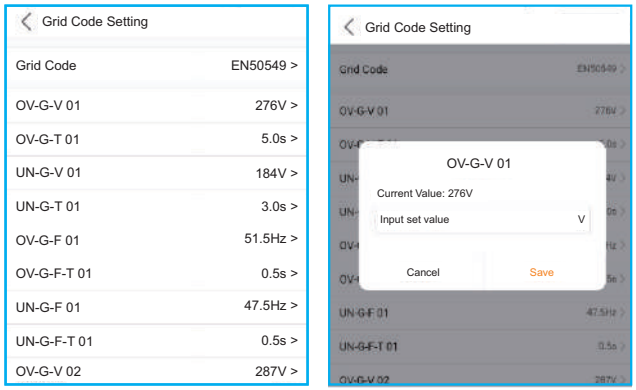

Step 5: **Turn on the AC switch between the inverter and Grid, wait till the inverter start generating.**

7.4 Stop the Inverter

To stop the inverter, it is mandatory that the steps below are followed in the exact order outlined.

1. Select "Power OFF" in the APP.
2. Turn off the AC Switch between Solis inverter and Grid.
3. Wait approximately 30 seconds (during this time, the AC side capacitors are dissipating energy). If the inverter has DC voltage above the start-up threshold, the red POWER LED will be lit. Switch the DC switch OFF.
4. Confirm all LED's switch OFF (~one (1) minute).

CAUTION

Although the inverter DC disconnect switch is in the OFF position and all the LED's are OFF, operators must wait five (5) minutes after the DC power source has been disconnected before opening the inverter cabinet. DC side capacitors can take up to five (5) minutes to dissipate all stored energy.

The APP interface contains 4 sections:

1. Home
2. Info
3. Alarm
4. Settings

8.1 Home Page

The home page contains the power and energy data of the inverter.
The PV data and AC data are also available under this section.

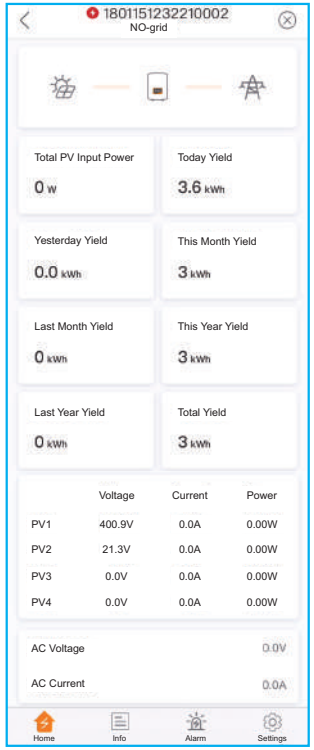

8.2 Info Page

Info page displays the general information of the inverter such as inverter serial number, firmware version, grid code, etc.

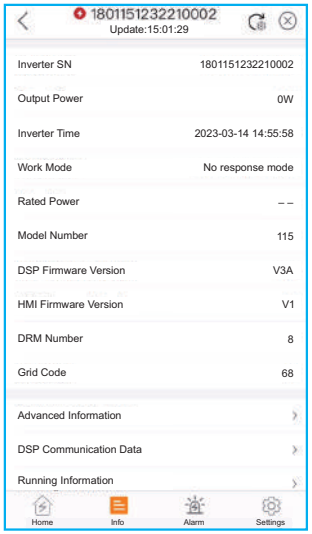

8.3 Alarm Page

Alarm page contains the alarm code of the inverter and its corresponding troubleshooting methods.

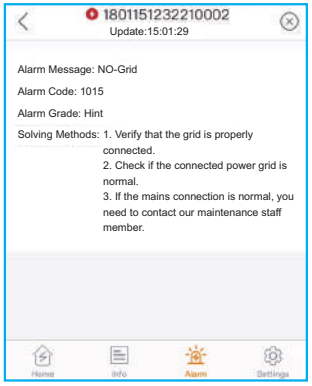

8.4 Setting Page

Setting page contains all the setting options of the inverter.

Functions	Setting Path
Switch on/off the inverter	Settings -> “Power ON” & ”Power OFF”
Change inverter time setting	Settings -> Inverter Setting-> Inverter Parameter Setting -> Inverter Time Setting
Change inverter output power percentage or power factor	Settings -> Inverter Setting-> Inverter Power Setting
Set grid code and protection parameters	Settings -> Grid Parameter Setting -> Grid Code Setting
Set Export Power control	Settings -> EPM Setting
Set grid code related working modes	Settings -> Inverter Work Mode Setting -> Work Mode

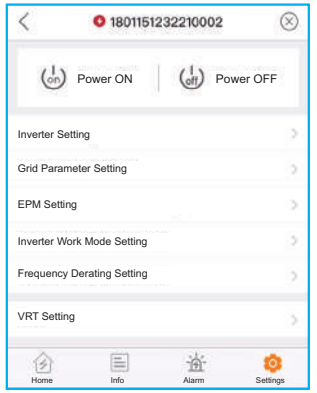

NOTE:
The inverter is by default setting with grid code which complies with local requirements. If there is need to modify the protection limits, please consult and approve by your local grid operator.

8.4.1 Start up and Stop the inverter

1. Select “Settings -> Power ON” to start up the inverter.
2. Select “Settings -> Power OFF” to stop the inverter.

8.4.2 Inverter Setting

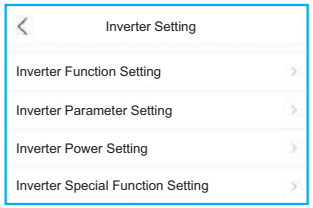

8.4.2.1 Inverter Function Setting

1. AFCI Setting

Setting	Description
AFCI Protect	Set the inverter AFCI function ON/OFF.
Arc-Fault Manual Reset	1. Within 24 hours, if an Arc-Fault alarm occurs for the 1st-4th times, the inverter will stop operating and automatically reconnect to the grid after a 5-minute delay. 2. Upon the 5th occurrence of an Arc-Fault alarm, the inverter will stop operating and will only reconnect to the grid automatically after the Arc-Fault alarm is manually cleared. Installer needs to thoroughly inspect the DC circuit to ensure all the cables are correctly fastened. Once the DC circuit issue has bean fixed or it is confirmed to be OK, using this setting to make a manual reset and wait for the inverter to reconnect.

2. 24-Hour Load Monitoring

Turn on this switch to enable 24-Hour Load Monitoring function. Please refer to 6.4.4.1 Built-in EPM Setting for details.

3. MPPT Multi-peak Scanning Setting

Setting	Description
MPPT Multi-peak Scanning Switch	Set the function ON/OFF.
MPPT Multi-peak Scan Interval	The inverter will carry out Multi-peak MPPT scanning 1 time every scan interval.

4. Logical Interface Setup

Setting	Description
Logic Interface(DRM) Switch	Set the function ON/OFF.
P_Limit DI 1 ~ P_Limit DI 4	Set the AC output power under different DI.

8. Operation

8.4.2.2 Inverter Parameter Setting

Setting	Description
Time	Set the inverter time and date according to local time zone.
Slave Address	Set the inverter address when multiple inverters are installed.
Generation Calibration	Calibrate the inverter daily, monthly, annual and total yield.

8.4.2.3 Inverter Power Setting

Setting	Description
Output Power Setting	Set the inverter maximum AC output power.
PF Curve	Set the inverter power factor.
Power Limit	Set the power control slope, power rise control slope, power down control slope, EN 50549 power change gradient after fault trip restart, EN 50549 gradient limit for power-on change.

8.4.2.4 Load-shed mode setting

Basing on the different sensitivity of noise level to customer, customer can choose the loadshed mode of controlling fan to reduce noise.
Select“Inverter setting -> inverter special function setting -> loadshed fan control”.

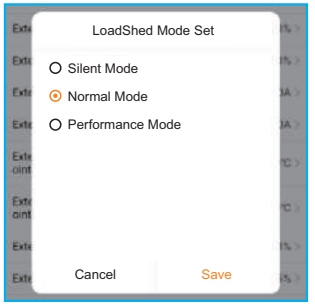

Noisy level(from max to min): Performance>normal>silent

8.4.3 Grid Parameter Setting

See Chapter 5.3 for details.

8.4.4 EPM Setting

Built-in EPM is for PV plant with only 1 inverter, while External EPM for multiple inverters.

8.4.4.1 Built-in EPM Setting

Select “Settings -> EPM Setting -> Built-in EPM Setting” to make the settings.
The Built-in EPM includes 2 functions related to the smart meter or smart sensor.

NOTE:

Function 1: Export Power Management Function

1. Inverters can work with a smart meter OR a smart sensor to dynamically limit the export power of the system.
2. Zero injection can be achieved.
3. Smart meter can be installed either on the grid side OR the load side. Smart sensor can only be installed on the grid side.

Function 2: 24-Hour Load Monitoring Function

1. Only applicable if Solis monitoring system is used.
2. Inverters can work with a smart meter OR smart sensor to monitor the load consumption data for the whole day and the data will be displayed on the Solis monitoring system.
3. Smart meter or smart sensor can only be installed on the grid side.

NOTE:

Please refer to below instructions for different user scenarios.

Scenario 1. Only Function 1 is required

Using a Smart Meter:

Step 1: Refer to Section 4.3.7 to connect the smart meter on the grid side or load side.
Step 2: Select the corresponding meter model in the **Meter Selection**.
Step 3: Choose **Meter in Grid Mode** or **Meter in Load Mode** in the **Built-in EPM mode selection** accordingly.
Step 4: Configure the **System Export Power Limit Value** to set the allowed backflow power.
Step 5: Configure the **Built-in EPM Failsafe Switch** to enable the failsafe function (If necessary).

Using a Smart Sensor:

Step 1: Refer to Section 4.3.8 to connect the smart sensor on the grid side.
Step 2: Select the **CT Sensor Mode** in the **Built-in EPM mode selection**.
Step 3: Configure the **CT Ratio** and **CT Direction** at the “**Settings -> EPM Setting -> CT Setting**”. (If necessary).
Step 4: Configure the **System Export Power Limit Value** to set the allowed backflow power.
Step 5: Configure the **Built-in EPM Failsafe Switch** to enable the failsafe function (If necessary).

8. Operation

NOTE:

Please refer to below instructions for different user scenarios.

Scenario 2. Only Function 2 is required

Using a Smart Meter:

Step 1: Refer to Section 4.3.7 to connect the smart meter on the grid side or load side.
Step 2: Select the corresponding meter model in the **Meter Selection**.
Step 3: Choose **Meter 24-Hour Monitoring Mode** in the **Built-in EPM mode selection** accordingly.
Step 4: Enable the **24-Hour Load Monitoring** function at “**Settings -> Inverter Setting -> Inverter Function Setting**”.

Using a Smart Sensor:

Step 1: Refer to Section 4.3.8 to connect the smart sensor on the grid side.
Step 2: Select the **CT load Monitoring Mode** in the **Built-in EPM mode selection**.
Step 3: Configure the **CT Ratio** and **CT Direction** at the “**Settings -> EPM Setting -> CT Setting**”. (If necessary).
Step 4: Enable the **24-Hour Load Monitoring** function at “**Settings -> Inverter Setting -> Inverter Function Setting**”.

NOTE:

Please refer to below instructions for different user scenarios.

Scenario 3. Both Function 1 and 2 are required

Using a Smart Meter:

Step 1: Refer to Section 4.3.7 to connect the smart meter on the grid side or load side.
Step 2: Select the corresponding meter model in the **Meter Selection**.
Step 3: Choose **Meter in Grid Mode** or **Meter in Load Mode** in the **Built-in EPM mode selection** accordingly.
Step 4: Configure the **System Export Power Limit Value** to set the allowed backflow power.
Step 5: Configure the **Built-in EPM Failsafe Switch** to enable the failsafe function (If necessary).
Step 6: Enable the **24-Hour Load Monitoring** function at “**Settings -> Inverter Setting -> Inverter Function Setting**”.

Using a Smart Sensor:

Step 1: Refer to Section 4.3.8 to connect the smart sensor on the grid side.
Step 2: Select the **CT Sensor Mode** in the **Built-in EPM mode selection**.
Step 3: Configure the **CT Ratio** and **CT Direction** at the “**Settings -> EPM Setting -> CT Setting**”. (If necessary).
Step 4: Configure the **System Export Power Limit Value** to set the allowed backflow power.
Step 5: Configure the **Built-in EPM Failsafe Switch** to enable the failsafe function (If necessary).
Step 6: Enable the **24-Hour Load Monitoring** function at “**Settings -> Inverter Setting -> Inverter Function Setting**”.

8. Operation

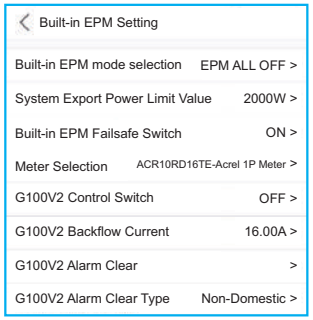

Setting	Description
Built-in EPM mode	6 built-in EPM mode is optional. Choose the appropriate mode needed.
System Export Power Limit Value	Set the permissible PV plant export power to the gird.
Built-in EPM Failsafe Switch	When G100 standard is used, this switch is enabled by default.
Meter Selection	Select the meter model according to the actual installation.
G100V2 Control Switch	When new G100 standard is used, enable this switch. Select the meter or CT mode according to the actual installation.
G100V2 Backflow Current	Set the backflow current of the PV plant to the grid. Only meaningful when G100V2 switch is on.
G100V2 Alarm Clear	Use this function to clear a fault status according to new G100 standard. Only meaningful when G100V2 switch is on.
G100V2 Alarm Clear Type	Select the Domestic or Non-domestic according to the actual installation. Only meaningful when G100V2 switch is on.

There are 6 modes for Built-in EPM.
1. EPM ALL OFF. Built-in EPM function is disabled.
2. CT Sensor Mode. Solis Smart Sensor is connected in the grid connection point (The **System Export Power Limit Value** setting is applicable, default value is 0W).
3. Meter in Grid Mode. Solis Smart Meter is connected in the grid connection point (The **System Export Power Limit Value** setting is applicable, default value is 0W).
4. Meter in Load Mode. Solis Smart Meter is connected in the load branch circuit (The **System Export Power Limit Value** setting is applicable, default value is 0W).
5. Meter 24-Hour Monitoring Mode. Solis Smart Meter is connected in the grid connection point(used for 24h load monitoring only, the **System Export Power Limit Value** setting is not applicable).

6. CT load Monitoring Mode. Solis Smart Sensor is connected in the grid connection point (used for 24h load monitoring only, the **System Export Power Limit Value** setting is not applicable).

8.4.4.2 External EPM Setting

Select "**Settings -> EPM Setting -> External EPM Setting**".
External EPM Failsafe Swtich should be turned ON when external EPM device is used.

8.4.5 Inverter Work Mode Setting

Select "Settings -> Inverter Work Mode Setting".

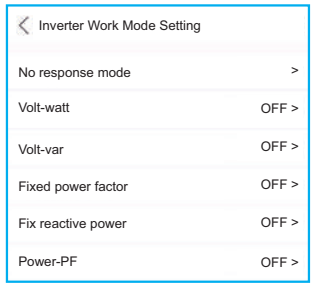

1. No response mode
Use this switch to close all response mode.
2. Volt-watt Mode
The volt-watt mode varies the active power output level of the inverter in response to the voltage at its grid-interactive port.
3. Volt-var Mode
The volt-var mode varies the reactive power absorbed or supplied by the inverter in response to the voltage at its grid-interactive port.
4. Fixed power factor Mode
The fixed power factor mode is for control of power factor over the range of inverter output.
5. Fixed reactive power Mode
The fixed reactive power mode is for control of reactive power over the range of inverter output.
6. Power-PF Mode
The Power-PF mode varies the active power output level of the inverter in response to its power factor.

9. Maintenance

Solis Three Phase Inverter does not require any regular maintenance. However, cleaning the dust on heat-sink will help the inverter to dissipate the heat and increase its life time. The dust can be removed with a soft brush.

CAUTION:
Do not touch the inverter's surface when it is operating. Some parts of the inverter may be hot and cause burns. Turn off the inverter and wait for a cool-down period before any maintenance or cleaning operation.

The LED status indicator lights can be cleaned with a damp cloth if they are too dirty to be read.

NOTE:
Never use any solvents, abrasives or corrosive materials to clean the inverter.

9.1 Fan Maintenance

If the fan does not work properly, the inverter will not be cooled effectively.
and it may affect the effective operation of the inverter .
Therefore, it is necessary to clean or replace a broken fan as follows:

1. Disconnect the AC power.
2. Turn the DC switch to "OFF" position.
3. Wait for 10 minutes at least.
4. Disconnect all electric connection.
5. Place the inverter on the platform.
6. Remove the 4 screws on the fan plate and pull out the fan assembly slowly.

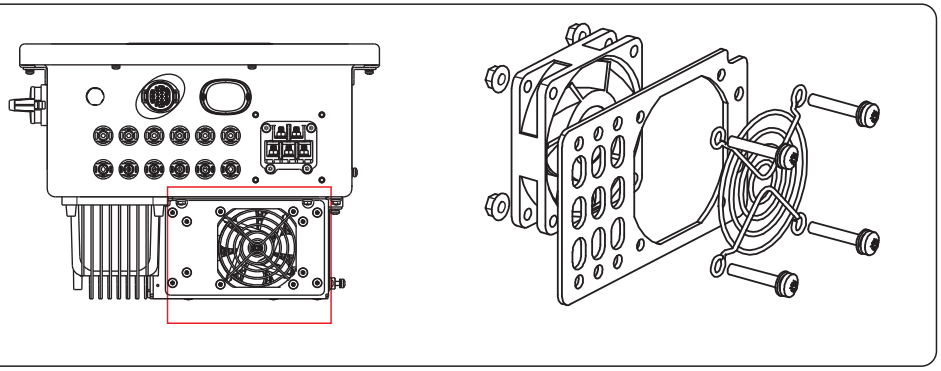

7. Disconnect the fan connector carefully and take out the fan.
8. Clean or replace the fan. Assemble the fan on the rack.
9. Connect the electrical wire and reinstall the fan assembly. Restart the inverter.

10. Troubleshooting

The inverter is designed in accordance with the most important international grid-tied standards and safety and electromagnetic compatibility requirements. Before delivering to the customer, the inverter has been subjected to several tests to ensure its optimal operation and reliability.
In case of failure, the APP will display an alarm message. In this case, the inverter may stop feeding into the grid. The failure descriptions and their corresponding alarm messages are listed in Table 10.1:

Message Name	Information Description	Troubleshooting Suggestion
Grid Over Voltage 01 (1010 DATA:0001)	Over grid voltage	1. If it occurs by accident, it may be short-term abnormality of the power grid. The inverter will resume normal work after detecting the normal power grid, and no manual intervention is required.
Grid Over Voltage 02 (1010 DATA:0002)		
Grid Over Voltage 03 (1010 DATA:0003)		
Grid Over Voltage 04 (1010 DATA:0004)		
Grid Over Voltage 05 (1010 DATA:0005)		
Grid Under Voltage 01 (1011 DATA:0001)	Under grid voltage	1. If it occurs by accident, it may be short-term abnormality of the power grid. The inverter will resume normal work after detecting the normal power grid, and no manual intervention is required. 2. If it occurs frequently, check the grid voltage and check whether the grid frequency is in the inverter. Within the allowable range, if not, please contact customer service; if yes, please check if the AC side breaker and output cable are connected properly. 3. If the grid voltage, grid frequency is within the allowable range of the inverter, and the AC side wiring confirmation It is true that this alarm still occurs frequently. After obtaining the consent of the local power operator, please contact customer service to modify the over-voltage and under-frequency protection points of the inverter power grid.
Grid Under Voltage 02 (1011 DATA:0002)		
Grid Over Frequency 01 (1012 DATA:0001)	Over grid frequency	
Grid Over Frequency 02 (1012 DATA:0001)		
Grid under Frequency 01 (1013 DATA:0001)	Under grid frequency	
Grid under Frequency 02 (1013 DATA:0002)		
NO-Grid (1015 DATA:0000)	No grid voltage	1. Verify that the grid is properly connected. 2. Check if the connected power grid is normal. 3. If the mains connection is normal, you need to contact our maintenance staff member.
OV-G-I (1018 DATA:0000)	Over grid current	

Message Name	Information Description	Troubleshooting Suggestion
IGFOL-F (1019 DATA:0000)	Grid current tracking fail	1. Restart the inverter or contact our service personnel.
OV-DC (1020 DATA:0001)	Over DC voltage	1. Check whether the series configuration of the PV strings is excessive, resulting in the open circuit voltage of the PV array being higher than the maximum input voltage of the inverter. If so, reduce the number of strings and make the string open voltage fall within the inverter specification range.
OV-DC (1020 DATA:0002)		
OV-BUS (1021 DATA:0000)	Over DC bus voltage	1. Check if the input voltage exceeds the maximum input voltage of the inverter. 2. Restart the inverter. 3. If it is still not resolved, contact the factory's customer service.
UNB-BUS (1022 DATA:0000)	Under DC bus voltage	
DC Bus Under Voltage 01 (1023 DATA:0001)	DC bus undervoltage	1. Check if the input voltage is too low. 2. Restart the inverter. 3. If it has not been eliminated, contact the factory's customer service.
DC Bus Under Voltage 02 (1023 DATA:0002)	Abnormal detection of DC bus voltage	
OV-DCA-I (1025 DATA:0000)	DC 1 average overcurrent	1. Check whether the MPPT of the A-way is reversed polarity. 2. Restart the inverter. 3. If it has not been eliminated, contact the factory's customer service.
OV-DCB-I (1026 DATA:0000)	DC 2 average overcurrent	1. Check whether the MPPT of the B-way is reversed polarity. 2. Restart the inverter. 3. If it has not been eliminated, contact the factory's customer service.
DC-INTF. (1027 DATA:0000)	DC hardware overcurrent	1. Check whether the DC connection is broken or damaged. 2. Restart the inverter. 3. If it has not been removed, contact the factory's customer service.
Reverse-DC (1028 DATA:0000)	Reverse DC polarity	1. Check if the DC line is reversed. 2. Restart the inverter. 3. If it is still not excluded, please contact the factory customer service.

10. Troubleshooting

Message Name	Information Description	Troubleshooting Suggestion
GRID-INTF. (1030 DATA:0000)	AC hardware overcurrent	1. Check whether the AC connection is virtual. 2. Restart the inverter. 3. If it has not been eliminated, contact the factory's customer service.
INI-FAULT (1031 DATA:0000)	Initialization system fault	1. Restart the inverter. 2. If it is still not resolved, contact the factory's customer service.
OV-TEM (1032 DATA:0000)	Over Temperature	1. Check whether the inverter installation position meets the requirements of the user manual. 2. Try to reduce the ambient temperature. 3. Restart the inverter after fifteen minutes. 4. If the error persists, please contact the factory's customer service.
PV Isolation Protection 01 (1033 DATA:0001)	DC bus undervoltage	1. Check whether the PV strings have insulation problems. 2. Check whether the PV cable is damaged.
PV Isolation Protection 02 (1033 DATA:0002)	PV negative ground fault	
Leakage Current Protection 01 (1034 DATA:0001)	Leakage current protection	1. Connect each string component individually to determine if it is caused by a component problem. If there is no error when inserting one of the string components, it can be determined that it is a string problem. Check whether the string in question is broken or not. 2. If this error is only caused by a rainy day or a certain time of the morning, it is because the aging of the module causes the leakage current to be too large. When the weather is fine or the air humidity is reduced, the error will be cleared automatically. Can be resolved through remote upgrade software.
Leakage Current Protection 02 (1034 DATA:0002)		
Leakage Current Protection 03 (1034 DATA:0003)		
Leakage Current Protection 04 (1034 DATA:0004)		
ILeak-Check (1039 DATA:0000)	Leakage current sensor failure	1. Upgrade software to the latest version. 2. If the fault persists, please contact the factory's customer service.
UN-TEM (103A DATA:0000)	Under Temperature	1. Check if the ambient temperature is too low and restart the inverter. If it has not been eliminated, contact the factory's customer service.

10. Troubleshooting

Message Name	Information Description	Troubleshooting Suggestion
Relay-FAULT (1035 DATA:0000)	Relay check fail	1. Restart the inverter 2. If it is still not resolved, contact the factory's customer service.
DSP-B-Com-Fau (1036 DATA:0000)	Comm. failure between main and slave DSP	
DCInj-FAULT (1037 DATA:0000)	High DC injection current	
12Power-FAULT (1038 DATA:0000)	12V power supply fault	
AFCI-Check (1040 DATA:0000)	AFCI module self-detect fault	1. Restart the inverter. 2. If it is still not resolved, contact the factory's customer service.
ARC-FAULT (1041 DATA:0000)	Detect arc in DC circuit	1. Check for arc in the inverter connection and restart the inverter.
GRID-INTF02 (1046 DATA:0000)	Power grid disturbance 02	1. Check if the grid side is not healthy. 2. Restart the inverter. If it is still not removed, contact the factory's customer service.
IG-AD (1047 DATA:0000)	Grid current sampling fail	1. Restart the inverter 2. If it is still not resolved, contact the factory's customer service.
IGBT-OV-I (1048 DATA:0000)	Over IGBT current	
State 2 excursion (2043H)	G100 State 2 excursion	The alarm appears when the current flow exceeds “G100V2 Backflow Current” under scenarios stipulated by G100 standard. As required by G100, ”State 2 excursion” alarm should be manually reset. Please select the “Settings -> EPM Setting -> Built-in EPM Setting->G100V2 Alarm Clear" to reset.
Fail Safe 2010H	Meter Communication Fail	1. Check the meter communication and restart the inverter. 2. If it is still not resolved, contact the factory's customer service.
MET_SEL_FAIL 2019H	Meter type select fail	Please select the correct smart meter type in inverter setting based on the smart meter actually connected to the inverter.

Message Name	Information Description	Troubleshooting Suggestion
CT Fault 201AH	CT Fault	The alarm occurs when the CT connected to the inverter or the CT connected to the smart meter loses connection. 1. When the alarm occurs with the “G100V2 Control Switch” on, please check and repair the CT wiring first, then select “Settings -> EPM Setting -> Built-in EPM Setting-> G100V2 Alarm Clear" to reset the alarm. 2. When the alarm occurs with the “G100V2 Control Switch” off, please check and repair the CT wiring and restart the inverter. 3. If it is still not resolved, contact the factory's customer service.
DRM_LINK_FAIL 2018H	DRM link fail	Please check if your DRM control device/ logic interface or its wiring is normal. If there is actually no DRM control device/ logic interface connected, please disable the DRM function in inverter settings.
DRM_CTL_Off 201BH	DRM control inverter to stop	Please check if the DRM function is enabled. This alarm indicates the DRM function controls the inverter to stop. If this is not expected, please disable the DRM function.
AFCI-Comm-Fail 2041H	AFCI communication fail	1.Restart the inverter . 2. If it is still not resolved, contact the factory's customer service.
AFCI-CTModule-Fail 2042H	AFCI CT module fail	

Table 10.1 Fault message and description



NOTE:

If the inverter displays any alarm message as listed in Table 8.1; please turn off the inverter and wait for 5 minutes before restarting it .
If the failure persists, please contact your local distributor or the service center.

1. Serial number of Solis Inverter;
2. The distributor/dealer of Solis Inverter (if available);
3. Installation date.
4. The description of problem (i.e. the alarm message displayed on the LCD and the status of the LED status indicator lights. Other readings obtained from the Information submenu will also be helpful.);
5. The PV array configuration (e.g. number of panels, capacity of panels, number of strings , etc.);
6. Your contact details.

11. Specifications

Model	S6-GC3P25K03-NV-ND
Max. DC input voltage (Volts)	1100
Rated DC voltage (Volts)	600
Start-up voltage (Volts)	180
MPPT voltage range (Volts)	180~1000
Max. input power per MPPT (Watts)	25000
Max. input current (Amps)	3*42
Max short circuit input current (Amps)	3*52.5
MPPT number/Max input strings number	3/6
Rated output power (Watts)	25000
Max. output power (Watts)	25000
Max. apparent output power (VA)	25000
Rated grid voltage (Volts)	3/N/PE, 220/380, 230/400
Rated grid output current (Amps)	38.0/36.1
Max. output current (Amps)	38.0/36.1
Power Factor (at rated output power)	0.8leading~0.8lagging
THDi (at rated output power)	<3%
Rated grid frequency (Hertz)	50/60
Max.efficiency	98.5%
EU efficiency	98.0%
Dimensions (W*H*D)	355*625*250mm
Weight	25.3kg
Topology	Transformerless
Self consumption (Night)	< 1W
Operating ambient temperature range	-25℃~+60℃
Relative humidity	0~100%
Ingress protection	IP66
Noise emission (Typical)	≤60 dB (A)
Cooling concept	Intelligent fan-cooling
Max.operation altitude	4000m
Grid connection standard	G98 or G99, VDE-AR-N 4105 / VDE V 0124, EN 50549-1, VDE 0126 / UTE C 15 / VFR:2019, RD 1699 / RD 244 / UNE 206006 / UNE 206007-1, CEI 0-21, C10/11, NRS 097-2-1, TOR, EIFS 2018.2, IEC 62116, IEC 61727, IEC60068, IEC 61683, EN 50530
Safty/EMC standard	IEC/EN 62109-1/-2, IEC/EN 61000-6-1/-2/-3/-4
DC connection	MC4 connector
AC connection	OT Terminal
Display	LED digital display & LED indicator
Communication connections	RS485, Optional: Wifi, GPRS
Warranty	5 years (extend to 20 years)

11. Specifications

Model	S6-GC3P30K03-NV-ND
Max. DC input voltage (Volts)	1100
Rated DC voltage (Volts)	600
Start-up voltage (Volts)	180
MPPT voltage range (Volts)	180~1000
Max. input power per MPPT (Watts)	25000
Max. input current (Amps)	3*42
Max short circuit input current (Amps)	3*52.5
MPPT number/Max input strings number	3/6
Rated output power (Watts)	30000
Max. output power (Watts)	30000
Max. apparent output power (VA)	30000
Rated grid voltage (Volts)	3/N/PE, 220/380, 230/400
Rated grid output current (Amps)	45.6/43.3
Max. output current (Amps)	45.6/43.3
Power Factor (at rated output power)	0.8leading~0.8lagging
THDi (at rated output power)	<3%
Rated grid frequency (Hertz)	50/60
Max.efficiency	98.5%
EU efficiency	98.0%
Dimensions (W*H*D)	355*625*250mm
Weight	25.5kg
Topology	Transformerless
Self consumption (Night)	< 1W
Operating ambient temperature range	-25℃~+60℃
Relative humidity	0~100%
Ingress protection	IP66
Noise emission (Typical)	≤60 dB (A)
Cooling concept	Intelligent fan-cooling
Max.operation altitude	4000m
Grid connection standard	G98 or G99, VDE-AR-N 4105 / VDE V 0124, EN 50549-1, VDE 0126 / UTE C 15 / VFR:2019, RD 1699 / RD 244 / UNE 206006 / UNE 206007-1, CEI 0-21, C10/11, NRS 097-2-1, TOR, EIFS 2018.2, IEC 62116, IEC 61727, IEC60068, IEC 61683, EN 50530
Safty/EMC standard	IEC/EN 62109-1/-2, IEC/EN 61000-6-1/-2/-3/-4
DC connection	MC4 connector
AC connection	OT Terminal
Display	LED digital display & LED indicator
Communication connections	RS485, Optional: Wifi, GPRS
Warranty	5 years (extend to 20 years)

11. Specifications

Model	S6-GC3P33K03-NV-ND
Max. DC input voltage (Volts)	1100
Rated DC voltage (Volts)	600
Start-up voltage (Volts)	180
MPPT voltage range (Volts)	180~1000
Max. input power per MPPT (Watts)	25000
Max. input current (Amps)	3*42
Max short circuit input current (Amps)	3*52.5
MPPT number/Max input strings number	3/6
Rated output power (Watts)	33000
Max. output power (Watts)	33000
Max. apparent output power (VA)	33000
Rated grid voltage (Volts)	3/N/PE, 220/380, 230/400
Rated grid output current (Amps)	50.1/47.6
Max. output current (Amps)	50.1/47.6
Power Factor (at rated output power)	0.8leading~0.8lagging
THDi (at rated output power)	<3%
Rated grid frequency (Hertz)	50/60
Max.efficiency	98.5%
EU efficiency	98.0%
Dimensions (W*H*D)	355*625*250mm
Weight	26.5kg
Topology	Transformerless
Self consumption (Night)	< 1W
Operating ambient temperature range	-25℃~+60℃
Relative humidity	0~100%
Ingress protection	IP66
Noise emission (Typical)	≤60 dB (A)
Cooling concept	Intelligent fan-cooling
Max.operation altitude	4000m
Grid connection standard	G98 or G99, VDE-AR-N 4105 / VDE V 0124, EN 50549-1, VDE 0126 / UTE C 15 / VFR:2019, RD 1699 / RD 244 / UNE 206006 / UNE 206007-1, CEI 0-21, C10/11, NRS 097-2-1, TOR, EIFS 2018.2, IEC 62116, IEC 61727, IEC60068, IEC 61683, EN 50530
Safty/EMC standard	IEC/EN 62109-1/-2, IEC/EN 61000-6-1/-2/-3/-4
DC connection	MC4 connector
AC connection	OT Terminal
Display	LED digital display & LED indicator
Communication connections	RS485, Optional: Wifi, GPRS
Warranty	5 years (extend to 20 years)

11. Specifications

Model	S6-GC3P36K03-NV-ND
Max. DC input voltage (Volts)	1100
Rated DC voltage (Volts)	600
Start-up voltage (Volts)	180
MPPT voltage range (Volts)	180~1000
Max. input power per MPPT (Watts)	25000
Max. input current (Amps)	3*42
Max short circuit input current (Amps)	3*52.5
MPPT number/Max input strings number	3/6
Rated output power (Watts)	36000
Max. output power (Watts)	36000
Max. apparent output power (VA)	36000
Rated grid voltage (Volts)	3/N/PE, 220/380, 230/400
Rated grid output current (Amps)	54.7/52.0
Max. output current (Amps)	54.7/52.0
Power Factor (at rated output power)	0.8leading~0.8lagging
THDi (at rated output power)	<3%
Rated grid frequency (Hertz)	50/60
Max.efficiency	98.5%
EU efficiency	98.0%
Dimensions (W*H*D)	355*625*250mm
Weight	26.5kg
Topology	Transformerless
Self consumption (Night)	< 1W
Operating ambient temperature range	-25℃~+60℃
Relative humidity	0~100%
Ingress protection	IP66
Noise emission (Typical)	≤60 dB (A)
Cooling concept	Intelligent fan-cooling
Max.operation altitude	4000m
Grid connection standard	G98 or G99, VDE-AR-N 4105 / VDE V 0124, EN 50549-1, VDE 0126 / UTE C 15 / VFR:2019, RD 1699 / RD 244 / UNE 206006 / UNE 206007-1, CEI 0-21, C10/11, NRS 097-2-1, TOR, EIFS 2018.2, IEC 62116, IEC 61727, IEC60068, IEC 61683, EN 50530
Safty/EMC standard	IEC/EN 62109-1/-2, IEC/EN 61000-6-1/-2/-3/-4
DC connection	MC4 connector
AC connection	OT Terminal
Display	LED digital display & LED indicator
Communication connections	RS485, Optional: Wifi, GPRS
Warranty	5 years (extend to 20 years)

11. Specifications

Model	S6-GC3P40K03-NV-ND
Max. DC input voltage (Volts)	1100
Rated DC voltage (Volts)	720
Start-up voltage (Volts)	180
MPPT voltage range (Volts)	180~1000
Max. input power per MPPT (Watts)	25000
Max. input current (Amps)	3*42
Max short circuit input current (Amps)	3*52.5
MPPT number/Max input strings number	3/6
Rated output power (Watts)	40000
Max. output power (Watts)	40000
Max. apparent output power (VA)	40000
Rated grid voltage (Volts)	3/PE, 480
Rated grid output current (Amps)	48.1
Max. output current (Amps)	48.1
Power Factor (at rated output power)	0.8leading~0.8lagging
THDi (at rated output power)	<3%
Rated grid frequency (Hertz)	50/60
Max.efficiency	98.6%
EU efficiency	98.1%
Dimensions (W*H*D)	355*625*250mm
Weight	26.5kg
Topology	Transformerless
Self consumption (Night)	< 1W
Operating ambient temperature range	-25℃~+60℃
Relative humidity	0~100%
Ingress protection	IP66
Noise emission (Typical)	≤60 dB (A)
Cooling concept	Intelligent fan-cooling
Max.operation altitude	4000m
Grid connection standard	G98 or G99, VDE-AR-N 4105 / VDE V 0124, EN 50549-1, VDE 0126 / UTE C 15 / VFR:2019, RD 1699 / RD 244 / UNE 206006 / UNE 206007-1, CEI 0-21, C10/11, NRS 097-2-1, TOR, EIFS 2018.2, IEC 62116, IEC 61727, IEC60068, IEC 61683, EN 50530
Safty/EMC standard	IEC/EN 62109-1/-2, IEC/EN 61000-6-1/-2/-3/-4
DC connection	MC4 connector
AC connection	OT Terminal
Display	LED digital display & LED indicator
Communication connections	RS485, Optional: Wifi, GPRS
Warranty	5 years (extend to 20 years)

11. Specifications

Model	S6-GC3P15K03-LV-ND
Max. DC input voltage (Volts)	1100
Rated DC voltage (Volts)	360
Start-up voltage (Volts)	180
MPPT voltage range (Volts)	180~1000
Max. input power per MPPT (Watts)	25000
Max. input current (Amps)	3*42
Max short circuit input current (Amps)	3*52.5
MPPT number/Max input strings number	3/6
Rated output power (Watts)	15000
Max. output power (Watts)	15000
Max. apparent output power (VA)	15000
Rated grid voltage (Volts)	3/PE, 220/230
Rated grid output current (Amps)	39.4/37.7
Max. output current (Amps)	39.4/37.7
Power Factor (at rated output power)	0.8leading~0.8lagging
THDi (at rated output power)	<3%
Rated grid frequency (Hertz)	50/60
Max.efficiency	97.8%
EU efficiency	97.3%
Dimensions (W*H*D)	355*625*250mm
Weight	25.5kg
Topology	Transformerless
Self consumption (Night)	< 1W
Operating ambient temperature range	-25℃~+60℃
Relative humidity	0~100%
Ingress protection	IP66
Noise emission (Typical)	≤60 dB (A)
Cooling concept	Intelligent fan-cooling
Max.operation altitude	4000m
Grid connection standard	G98 or G99, VDE-AR-N 4105 / VDE V 0124, EN 50549-1, VDE 0126 / UTE C 15 / VFR:2019, RD 1699 / RD 244 / UNE 206006 / UNE 206007-1, CEI 0-21, C10/11, NRS 097-2-1, TOR, EIFS 2018.2, IEC 62116, IEC 61727, IEC60068, IEC 61683, EN 50530
Safty/EMC standard	IEC/EN 62109-1/-2, IEC/EN 61000-6-1/-2/-3/-4
DC connection	MC4 connector
AC connection	OT Terminal
Display	LED digital display & LED indicator
Communication connections	RS485, Optional: Wifi, GPRS
Warranty	5 years (extend to 20 years)

11. Specifications

Model	S6-GC3P20K03-LV-ND
Max. DC input voltage (Volts)	1100
Rated DC voltage (Volts)	360
Start-up voltage (Volts)	180
MPPT voltage range (Volts)	180~1000
Max. input power per MPPT (Watts)	25000
Max. input current (Amps)	3*42
Max short circuit input current (Amps)	3*52.5
MPPT number/Max input strings number	3/6
Rated output power (Watts)	20000
Max. output power (Watts)	20000
Max. apparent output power (VA)	20000
Rated grid voltage (Volts)	3/PE, 220/230
Rated grid output current (Amps)	52.5/50.2
Max. output current (Amps)	52.5/50.2
Power Factor (at rated output power)	0.8leading~0.8lagging
THDi (at rated output power)	<3%
Rated grid frequency (Hertz)	50/60
Max.efficiency	97.8%
EU efficiency	97.3%
Dimensions (W*H*D)	355*625*250mm
Weight	26.5kg
Topology	Transformerless
Self consumption (Night)	< 1W
Operating ambient temperature range	-25℃~+60℃
Relative humidity	0~100%
Ingress protection	IP66
Noise emission (Typical)	≤60 dB (A)
Cooling concept	Intelligent fan-cooling
Max.operation altitude	4000m
Grid connection standard	G98 or G99, VDE-AR-N 4105 / VDE V 0124, EN 50549-1, VDE 0126 / UTE C 15 / VFR:2019, RD 1699 / RD 244 / UNE 206006 / UNE 206007-1, CEI 0-21, C10/11, NRS 097-2-1, TOR, EIFS 2018.2, IEC 62116, IEC 61727, IEC60068, IEC 61683, EN 50530
Safty/EMC standard	IEC/EN 62109-1/-2, IEC/EN 61000-6-1/-2/-3/-4
DC connection	MC4 connector
AC connection	OT Terminal
Display	LED digital display & LED indicator
Communication connections	RS485, Optional: Wifi, GPRS
Warranty	5 years (extend to 20 years)