8 Megabit (512K x 16-Bit) Multi-Purpose Flash

SST39VF800Q / SST39VF800

Advance Information

FEATURES:

- **Organized as 512 K X 16**
- **Single 2.7-3.6V Read and Write Operations**
- **V_{DDQ} Power Supply to Support 5V I/O for SST39VF800Q**
  - V_{DDQ} not available on SST39VF800
- **Superior Reliability**
  - Endurance: 100,000 Cycles (typical)
  - Greater than 100 years Data Retention
- **Low Power Consumption:**
  - Active Current: 15 mA (typical)
  - Standby Current: 3 µA (typical)
  - Auto Low Power Mode: 3 µA (typical)
- **Small Sector Erase Capability (256 sectors)**
  - Uniform 2 KWord sectors
- **Block Erase Capability (16 blocks)**
  - Uniform 32 KWord blocks
- **Fast Read Access Time:**
  - 70 and 90 ns
- **Latched Address and Data**
- **Fast Sector Erase and Word Program:**
  - Sector Erase Time: 18 ms (typical)
  - Block Erase Time: 18 ms (typical)
  - Chip Erase Time: 70 ms (typical)
  - Word Program time: 14 µs (typical)
  - Chip Rewrite Time: 8 seconds (typical)
- **Automatic Write Timing**
  - Internal V_{PP} Generation
- **End of Write Detection**
  - Toggle Bit
  - Data# Polling
- **CMOS I/O Compatibility**
- **JEDEC Standard**
  - Flash EEPROM Pinouts and command sets
- **Packages Available**
  - 48-Pin TSOP (12mm x 20mm)
  - 6 x 8 Ball TFBGA

PRODUCT DESCRIPTION

The SST39VF800Q/VF800 devices are 512K x 16 CMOS Multi-Purpose Flash (MPF) manufactured with SST's proprietary, high performance CMOS SuperFlash technology. The split-gate cell design and thick oxide tunneling injector attain better reliability and manufacturability compared with alternate approaches. The SST39VF800Q/VF800 write (Program or Erase) with a 2.7-3.6V power supply. The SST39VF800Q/VF800 conform to JEDEC standard pinouts for x16 memories.

Featuring high performance word program, the SST39VF800Q/VF800 devices provide a typical word program time of 14 µsec. The entire memory can typically be erased and programmed word-by-word in 8 seconds, when using interface features such as Toggle Bit or Data# Polling to indicate the completion of Program operation. To protect against inadvertent write, the SST39VF800Q/VF800 have on-chip hardware and software data protection schemes. Designed, manufactured, and tested for a wide spectrum of applications, the SST39VF800Q/VF800 are offered with a guaranteed endurance of 10,000 cycles. Data retention is rated at greater than 100 years.

The SST39VF800Q/VF800 devices are suited for applications that require convenient and economical updating of program, configuration, or data memory. For all system applications, the SST39VF800Q/VF800 significantly improve performance and reliability, while lowering power consumption. The SST39VF800Q/VF800 inherently use less energy during Erase and Program than alternative flash technologies. The total energy consumed is a function of the applied voltage, current, and time of application. Since for any given voltage range, the SuperFlash technology uses less current to program and has a shorter erase time, the total energy consumed during any Erase or Program operation is less than alternative flash technologies. The SST39VF800Q/VF800 also improve flexibility while lowering the cost for program, data, and configuration storage applications.

The SuperFlash technology provides fixed Erase and Program times, independent of the number of Erase/Program cycles that have occurred. Therefore the system software or hardware does not have to be modified or de-rated as is necessary with alternative flash technologies, whose erase and program times increase with accumulated Erase/Program cycles.

To meet high density, surface mount requirements, the SST39VF800Q/VF800 are offered in 48-pin TSOP and 48-pin TFBGA packages. See Figures 1 and 2 for pinouts.

Device Operation

Commands are used to initiate the memory operation functions of the device. Commands are written to the device using standard microprocessor write sequences. A command is written by asserting WE# low while keeping CE# low. The address bus is latched on the falling edge of WE# or CE#, whichever occurs last. The data bus is latched on the rising edge of WE# or CE#, whichever occurs first.

© 1999 Silicon Storage Technology, Inc.The SST logo and SuperFlash are registered trademarks of Silicon Storage Technology, Inc. MPF is a trademark of Silicon Storage Technology, Inc.

These specifications are subject to change without notice.

The SST39VF800Q/VF800 also have the **Auto Low Power** mode which puts the device in a near standby mode after data has been accessed with a valid read operation. This reduces the I_{DD} active read current from typically 15 mA to typically 3 µA. The Auto Low Power mode reduces the typical I_{DD} active read current to the range of 1 mA/MHz of read cycle time. The device exits the Auto Low Power mode with any address transition or control signal transition used to initiate another read cycle, with no access time penalty.

Read

The Read operation of the SST39VF800Q/VF800 is controlled by CE# and OE#, both have to be low for the system to obtain data from the outputs. CE# is used for device selection. When CE# is high, the chip is deselected and only standby power is consumed. OE# is the output control and is used to gate data from the output pins. The data bus is in high impedance state when either CE# or OE# is high. Refer to the Read cycle timing diagram for further details (Figure 3).

Word Program Operation

The SST39VF800Q/VF800 are programmed on a word-by-word basis. The Program operation consists of three steps. The first step is the three-byte load sequence for Software Data Protection. The second step is to load word address and word data. During the Word Program operation, the addresses are latched on the falling edge of either CE# or WE#, whichever occurs last. The data is latched on the rising edge of either CE# or WE#, whichever occurs first. The third step is the internal Program operation which is initiated after the rising edge of the fourth WE# or CE#, whichever occurs first. The Program operation, once initiated, will be completed within 20 µs. See Figures 4 and 5 for WE# and CE# controlled Program operation timing diagrams and Figure 16 for flowcharts. During the Program operation, the only valid reads are Data# Polling and Toggle Bit. During the internal Program operation, the host is free to perform additional tasks. Any commands issued during the internal Program operation are ignored.

Sector/Block Erase Operation

The Sector/Block Erase operation allows the system to erase the device on a sector-by-sector (or block-by-block) basis. The SST39VF800Q/VF800 offer both small Sector Erase and Block Erase mode. The sector architecture is based on uniform sector size of 2 KWord. The Block Erase mode is based on uniform block size of 32 KWord. The Sector Erase operation is initiated by executing a six-byte-command sequence with Sector Erase command (30H) and sector address (SA) in the last bus cycle. The address lines A11-A18 are used to determine the sector address. The Block Erase operation is initiated by executing a six-byte command sequence with Block Erase command (50H) and block address (BA) in the last bus cycle. The address lines A15-A18 are used to determine the block address. The sector or block address is latched on the falling edge of the sixth WE# pulse, while the command (30H or 50H) is latched on the rising edge of the sixth WE# pulse. The internal Erase operation begins after the sixth WE# pulse. The end of Erase operation can be determined using either Data# Polling or Toggle Bit methods. See Figures 9 and 10 for timing waveforms. Any commands issued during the Sector or Block Erase operation are ignored.

Chip Erase Operation

The SST39VF800Q/VF800 provide a Chip Erase operation, which allows the user to erase the entire memory array to the “1” state. This is useful when the entire device must be quickly erased.

The Chip Erase operation is initiated by executing a six-byte command sequence with Chip Erase command (10H) at address 5555H in the last byte sequence. The Erase operation begins with the rising edge of the sixth WE# or CE#, whichever occurs first. During the Erase operation, the only valid read is Toggle Bit or Data# Polling. See Table 4 for the command sequence, Figure 8 for timing diagram, and Figure 19 for the flowchart. Any commands issued during the Chip Erase operation are ignored.

Write Operation Status Detection

The SST39VF800Q/VF800 provide two software means to detect the completion of a write (Program or Erase) cycle, in order to optimize the system write cycle time. The software detection includes two status bits: Data# Polling (DQ_7) and Toggle Bit (DQ_6). The end of write detection mode is enabled after the rising edge of WE#, which initiates the internal program or erase operation.

The actual completion of the nonvolatile write is asynchronous with the system; therefore, either a Data# Polling or Toggle Bit read may be simultaneous with the completion of the write cycle. If this occurs, the system may possibly get an erroneous result, i.e., valid data may appear to conflict with either DQ_7 or DQ_6. In order to prevent spurious rejection, if an erroneous result occurs, the software routine should include a loop to read the accessed location an additional two (2) times. If both reads are valid, then the device has completed the write cycle, otherwise the rejection is valid.

Data# Polling (DQ_7)

When the SST39VF800Q/VF800 are in the internal Program operation, any attempt to read DQ_7 will produce the complement of the true data. Once the Program operation is completed, DQ_7 will produce true data. The device is

© 1999 Silicon Storage Technology, Inc.

then ready for the next operation. During internal Erase operation, any attempt to read DQ7 will produce a '0'. Once the internal Erase operation is completed, DQ7 will produce a '1'. The Data# Polling is valid after the rising edge of fourth WE# (or CE#) pulse for Program operation. For Sector, Block or Chip Erase, the Data# Polling is valid after the rising edge of sixth WE# (or CE#) pulse. See Figure 6 for Data# Polling timing diagram and Figure 17 for a flowchart.

Toggle Bit (DQ_6)

During the internal Program or Erase operation, any consecutive attempts to read DQ_6 will produce alternating 1's and 0's, i.e., toggling between 1 and 0. When the internal Program or Erase operation is completed, the DQ6 bit will stop toggling. The device is then ready for the next operation. The Toggle Bit is valid after the rising edge of fourth WE# (or CE#) pulse for Program operation. For Sector, Block or Chip Erase, the Toggle Bit is valid after the rising edge of sixth WE# (or CE#) pulse. See Figure 7 for Toggle Bit timing diagram and Figure 17 for a flowchart.

Data Protection

The SST39VF800Q/VF800 provide both hardware and software features to protect nonvolatile data from inadvertent writes.

Hardware Data Protection

Noise/Glitch Protection: A WE# or CE# pulse of less than 5 ns will not initiate a write cycle.

V_{DD} Power Up/Down Detection: The Write operation is inhibited when V_{DD} is less than 1.5V.

Write Inhibit Mode: Forcing OE# low, CE# high, or WE# high will inhibit the Write operation. This prevents inadvertent writes during power-up or power-down.

Software Data Protection (SDP)

The SST39VF800Q/VF800 provide the JEDEC approved Software Data Protection scheme for all data alteration operations, i.e., Program and Erase. Any Program operation requires the inclusion of the three byte sequence. The three-byte load sequence is used to initiate the Program operation, providing optimal protection from inadvertent Write operations, e.g., during the system power-up or power-down. Any Erase operation requires the inclusion of six-byte sequence. The SST39VF800Q/VF800 devices are shipped with the software data protection permanently enabled. See Table 4 for the specific software command codes. During SDP command sequence, invalid commands will abort the device to read mode within T_{RC}. The contents of DQ_{15}-DQ_8 are "Don't Care" during any SDP command sequence.

Common Flash Memory Interface (CFI)

The SST39VF800Q/VF800 also contain the CFI information to describe the characteristics of the device. In order to enter the CFI Query mode, the system must write three-byte sequence, same as product ID entry command with 98H (CFI Query command) to address 5555H in the last byte sequence. Once the device enters the CFI Query mode, the system can read CFI data at the addresses given in tables 5 through 7. The system must write the CFI Exit command to return to Read mode from the CFI Query mode.

Product Identification

The Product Identification mode identifies the devices as the SST39VF800Q, SST39VF800 and manufacturer as SST. This mode may be accessed by hardware or software operations. The hardware operation is typically used by a programmer to identify the correct algorithm for the SST39VF800Q/VF800. Users may wish to use the Software Product Identification operation to identify the part (i.e., using the device code) when using multiple manufacturers in the same socket. For details, see Table 3 for hardware operation or Table 4 for software operation, Figure 11 for the Software ID Entry and Read timing diagram and Figure 18 for the ID Entry command sequence flowchart.

TABLE 1: PRODUCT IDENTIFICATION TABLE

	Address	Data
Manufacturer's Code	0000H	00BFH
Device Code	0001H	2781H

343 PGM T1.0

Product Identification Mode Exit/CFI Mode Exit

In order to return to the standard Read mode, the Software Product Identification mode must be exited. Exit is accomplished by issuing the Software ID Exit command sequence, which returns the device to the Read operation. This command may also be used to reset the device to the Read mode after any inadvertent transient condition that apparently causes the device to behave abnormally, e.g., not read correctly. Please note that the Software ID Exit/CFI Exit command is ignored during an internal Program or Erase operation. See Table 4 for software command codes, Figure 13 for timing waveform and Figure 18 for a flowchart.

V_{DDQ} - I/O Power Supply

This feature is available only on the SST39VF800Q. This pin functions as power supply pin for input/output buffers. It should be tied to V_{DD} (2.7-3.6V) in a 3.0V-only system. It should be tied to a 5.0V±10% (4.5-5.5V) power supply in a mixed voltage system environment where flash memory has to be interfaced with 5V system chips. The V_{DDQ} pin is not offered on the SST39VF800, instead it is a No Connect pin.

© 1999 Silicon Storage Technology, Inc.

Functional Block Diagram

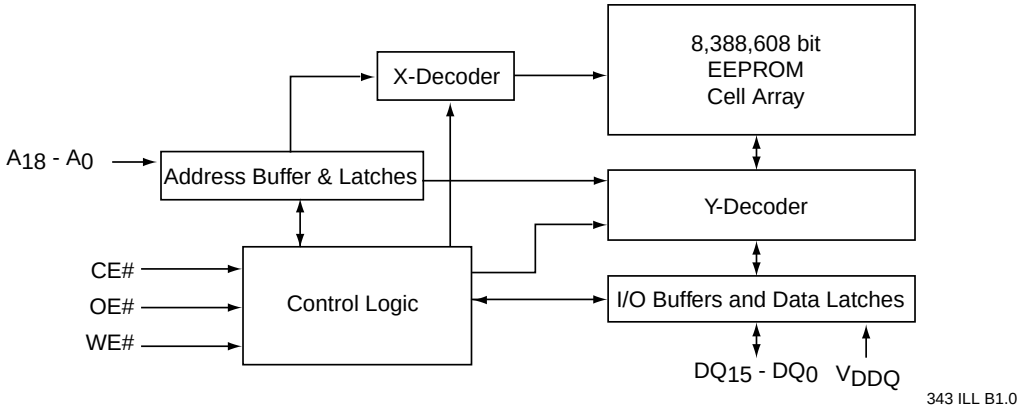

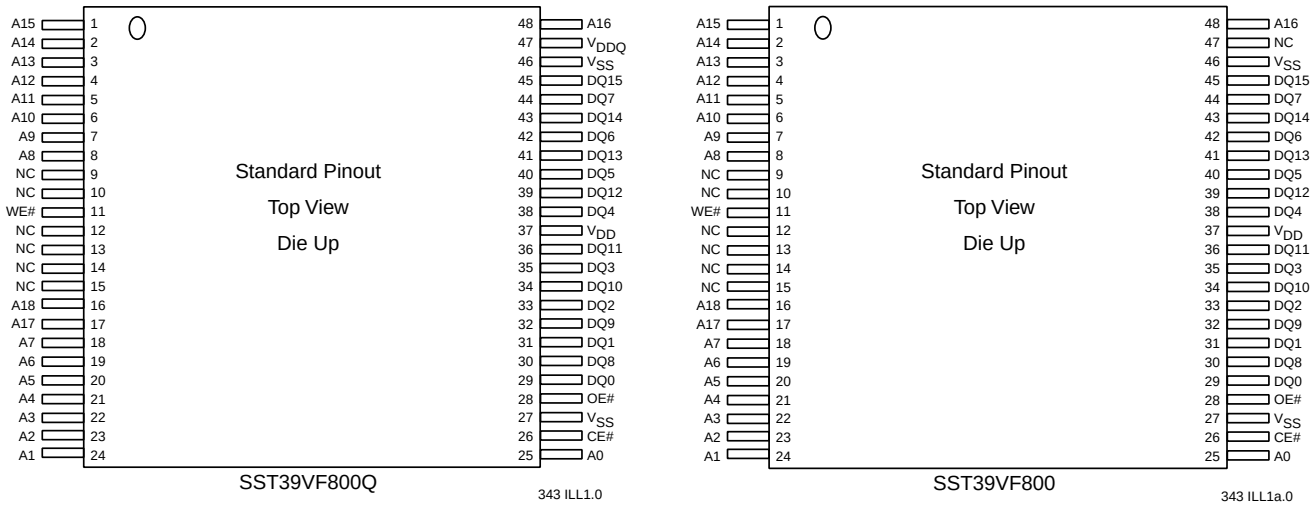

Figure 1: Pin Assignments for 48-pin TSOP Packages

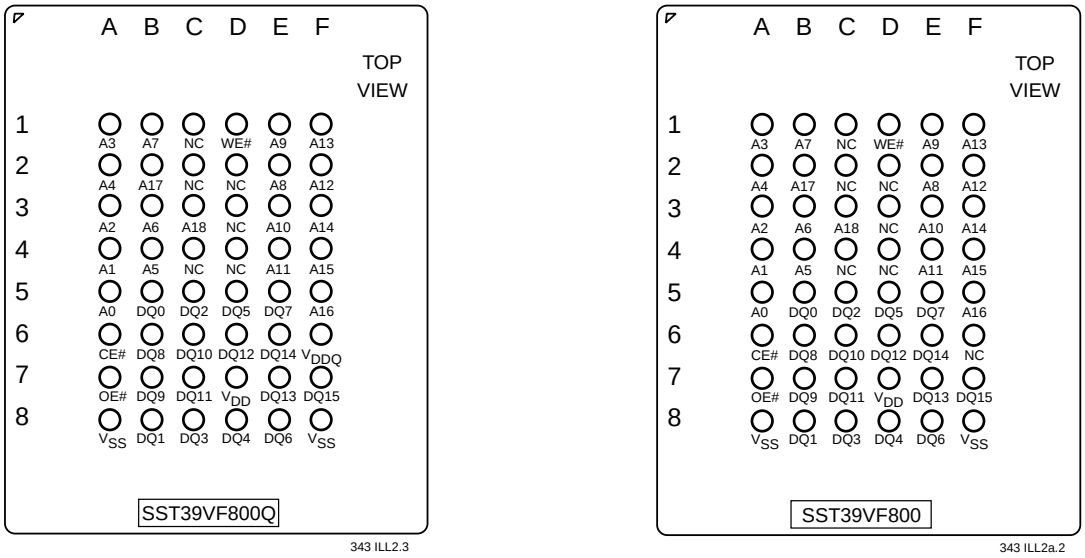

Figure 2: Pin Assignments for 48-ball TFBGA

© 1999 Silicon Storage Technology, Inc.

TABLE 2: PIN DESCRIPTION

Symbol	Pin Name	Functions
A_{18}-A_0	Address Inputs	To provide memory addresses. During sector erase A_{18}-A_{11} address lines will select the sector. During block erase A_{18}-A_{15} address lines will select the block.
DQ_{15}-DQ_0	Data Input/output	To output data during read cycles and receive input data during write cycles. Data is internally latched during a write cycle. The outputs are in tri-state when OE# or CE# is high.
CE#	Chip Enable	To activate the device when CE# is low.
OE#	Output Enable	To gate the data output buffers.
WE#	Write Enable	To control the write operations.
V_{DD}	Power Supply	To provide 3-volt supply (2.7-3.6V)
V_{DDQ}	I/O Power Supply	Supplies power for input/output buffers. It should be either tied to V_{DD} (2.7 - 3.6V) for 3V I/O or to a 5.0V (4.5 - 5.5V) power supply to support 5V I/O. (Not offered on SST39VF800 device, instead it is a NC)
Vss	Ground	
NC	No Connection	Unconnected pins.

343 PGM T2.0

TABLE 3: OPERATION MODES SELECTION

Mode	CE#	OE#	WE#	A9	DQ	Address
Read	V_{IL}	V_{IL}	V_{IH}	A_{IN}	D_{OUT}	A_{IN}
Program	V_{IL}	V_{IH}	V_{IL}	A_{IN}	D_{IN}	A_{IN}
Erase	V_{IL}	V_{IH}	V_{IL}	X	X	Sector or block address, XXh for chip erase
Standby	V_{IH}	X	X	X	High Z	X
Write Inhibit	X	V_{IL}	X	X	High Z/ D_{OUT}	X
	X	X	V_{IH}	X	High Z/ D_{OUT}	X
Product Identification						
Hardware Mode	V_{IL}	V_{IL}	V_{IH}	V_H	Manufacturer Code (00BF) Device Code (2781)	A_{18} - A_1 = V_{IL}, A_0 = V_{IL} A_{18} - A_1 = V_{IL}, A_0 = V_{IH}
Software Mode	V_{IL}	V_{IL}	V_{IH}	A_{IN}		See Table 4

343 PGM T3.0

© 1999 Silicon Storage Technology, Inc.

TABLE 4: SOFTWARE COMMAND SEQUENCE

Command Sequence	1st Bus Write Cycle		2nd Bus Write Cycle		3rd Bus Write Cycle		4th Bus Write Cycle		5th Bus Write Cycle		6th Bus Write Cycle	
	Addr(1)	Data	Addr(1)	Data	Addr(1)	Data	Addr(1)	Data	Addr(1)	Data	Addr(1)	Data
Word Program	5555H	AAH	2AAAH	55H	5555H	A0H	WA(3)	Data				
Sector Erase	5555H	AAH	2AAAH	55H	5555H	80H	5555H	AAH	2AAAH	55H	SA_x(2)	30H
Block Erase	5555H	AAH	2AAAH	55H	5555H	80H	5555H	AAH	2AAAH	55H	BA_x(2)	50H
Chip Erase	5555H	AAH	2AAAH	55H	5555H	80H	5555H	AAH	2AAAH	55H	5555H	10H
Software ID Entry	5555H	AAH	2AAAH	55H	5555H	90H						
CFI Query Entry	5555H	AAH	2AAAH	55H	5555H	98H						
Software ID Exit/ CFI Exit	XXH	F0H										
Software ID Exit/ CFI Exit	5555H	AAH	2AAAH	55H	5555H	F0H						

343 PGM T4.0

Notes: (1) Address format A_{14}-A_0 (Hex), Addresses A_{15}, A_{16}, A_{17} and A_{18} are "Don't Care" for Command sequence.

(2) SA_x for Sector Erase; uses A_{18}-A_{11} address lines
BA_x, for Block Erase; uses A_{18}-A_{15} address lines

(3) WA = Program word address

(4) Both Software ID Exit operations are equivalent

(5) DQ_{15} - DQ_8 are "Don't Care" for Command sequence

Notes for Software ID Entry Command Sequence

1. With A_{18} -A_1 =0; SST Manufacturer Code = 00BFH, is read with A_0 = 0,
   SST39VF800Q/VF800 Device Code = 2781H, is read with A_0 = 1.
2. The device does not remain in Software Product ID Mode if powered down.

TABLE 5: CFI QUERY IDENTIFICATION STRING[1]

Address	Data	Data
10H 11H 12H	0051H 0052H 0059H	Query Unique ASCII string "QRY"
13H 14H	0001H 0007H	Primary OEM command set
15H 16H	0000H 0000H	Address for Primary Extended Table
17H 18H	0000H 0000H	Alternate OEM command set (00H = none exists)
19H 1AH	0000H 0000H	Address for Alternate OEM extended Table (00H = none exits)

Note 1: Refer to CFI publication 100 for more details.

343 PGM T5.1

© 1999 Silicon Storage Technology, Inc.

TABLE 6: SYSTEM INTERFACE INFORMATION

Address	Data	Data
1BH	0027H	V_{DD} Min. (Program/Erase) DQ7-DQ4: Volts, DQ3-DQ0: millivolts
1CH	0036H	V_{DD} Max. (Program/Erase) DQ7-DQ4: Volts, DQ3-DQ0: millivolts
1DH	0000H	V_{PP} min. (00H = no V_{PP} pin)
1EH	0000H	V_{PP} max. (00H = no V_{PP} pin)
1FH	0004H	Typical time out for Word Program 2^N µs (2^4 = 16 µs)
20H	0000H	Typical time out for min. size buffer program 2^N µs (00H = not supported)
21H	0004H	Typical time out for individual Sector/Block Erase 2^N ms (2^4 = 16 ms)
22H	0006H	Typical time out for Chip Erase 2^N ms (2^6 = 64 ms)
23H	0001H	Maximum time out for Word Program 2^N times typical (2^1 x 2^4 = 32 µs)
24H	0000H	Maximum time out for buffer program 2^N times typical
25H	0001H	Maximum time out for individual Sector/Block Erase 2^N times typical (2^1 x 2^4 = 32 ms)
26H	0001H	Maximum time out for Chip Erase 2^N times typical (2^1 x 2^6 = 128 ms)

343 PGM T6.2

TABLE 7: DEVICE GEOMETRY INFORMATION

Address	Data	Data
27H	0014H	Device size = 2^N Bytes (14H = 20; 2^{20} = 1M Bytes)
28H 29H	0001H 0000H	Flash Device Interface description; 0001H = x16-only asynchronous interface
2AH 2BH	0000H 0000H	Maximum number of byte in multi-byte write = 2^N (00H = not supported)
2CH	0002H	Number of Erase Sector/Block sizes supported by device
2DH 2EH 2FH 30H	00FFH 0000H 0010H 0000H	Sector Information (y + 1 = Number of sectors; z x 256B = sector size) y = 255 + 1 = 256 sectors (00FFH = 255) z = 16 x 256 Bytes = 4 KBytes/sector (0010H = 16)
31H 32H 33H 34H	000FH 0000H 0000H 0001H	Block Information (y + 1 = Number of blocks; z x 256B = block size) y = 15 + 1 = 16 blocks (000FH = 15) z = 256 x 256 Bytes = 64 KBytes/block (0100H = 256)

343 PGM T7.2

© 1999 Silicon Storage Technology, Inc.

Absolute Maximum Stress Ratings (Applied conditions greater than those listed under "Absolute Maximum Stress Ratings" may cause permanent damage to the device. This is a stress rating only and functional operation of the device at these conditions or conditions greater than those defined in the operational sections of this data sheet is not implied. Exposure to absolute maximum stress rating conditions may affect device reliability.)

Temperature Under Bias ..... -55°C to +125°C
Storage Temperature ..... -65°C to +150°C
D. C. Voltage on Any Pin to Ground Potential ..... -0.5V to V_{DDQ} (2) + 0.5V
Transient Voltage (<20 ns) on Any Pin to Ground Potential ..... -1.0V to V_{DDQ} (2) + 1.0V
Voltage on A_9 Pin to Ground Potential ..... -0.5V to 13.2V
Package Power Dissipation Capability (Ta = 25°C) 1.0W
Surface Mount Lead Soldering Temperature (3 Seconds) ..... 240°C
Output Short Circuit Current(1) ..... 50 mA

Note: (1) Outputs shorted for no more than one second. No more than one output shorted at a time.
(2) The absolute maximum stress ratings for SST39VF800 are referenced to V_{DD}.

OPERATING RANGE

Range	Ambient Temp	V_{DD}	V_{DDQ}
Commercial	0 °C to +70 °C	2.7 - 3.6V	V_{DD} or 4.5 - 5.5V
Industrial	-40 °C to +85 °C	2.7 - 3.6V	V_{DD} or 4.5 - 5.5V

AC CONDITIONS OF TEST

Input Rise/Fall Time ..... 10 ns
Output Load ..... C_L = 100 pF
See Figures 14 and 15

© 1999 Silicon Storage Technology, Inc.

TABLE 8: DC OPERATING CHARACTERISTICS V_{DD} = 2.7-3.6V AND V_{DDQ} = V_{DD} OR 4.5V - 5.5V

Symbol	Parameter	Limits Min	Limits Max	Limits Units	Test Conditions
I_{DD}	Power Supply Current Read Program and Erase		 20 25	 mA mA	CE#=OE#=V_{IL},WE#=V_{IH} , all I/Os open, Address input = V_{IL}/V_{IH}, at f=1/T_{RC} Min. CE#=WE#=V_{IL}, OE#=V_{IH}, V_{DD}=V_{DD} Max.
I_{SB}	Standby V_{DD} Current		10	µA	CE#=V_{IHC}, V_{DD} = V_{DD} Max.
I_{ALP}	Auto Low Power Current		10	µA	CE#=V_{IHC}, V_{DD} = V_{DD} Max.
I_{LI}	Input Leakage Current		1	µA	V_{IN} =GND to V_{DD}, V_{DD} = V_{DD} Max.
I_{LO}	Output Leakage Current		1	µA	V_{OUT} =GND to V_{DD}, V_{DD} = V_{DD} Max.
V_{IL}	Input Low Voltage		0.8	V	V_{DD} = V_{DD} Min.
V_{ILC}	Input Low Voltage (CMOS)	0.3		V	V_{DD} = V_{DD} Max.
V_{IH}	Input High Voltage	2.0		V	V_{DD} = V_{DD} Max.
V_{IHC}	Input High Voltage (CMOS)	V_{DD}-0.3		V	V_{DD} = V_{DD} Max.
V_{OL}	Output Low Voltage		0.4	V	I_{OL} = 100 µA, V_{DD} = V_{DD} Min.
V_{OH}	Output High Voltage	2.4		V	I_{OH} = -100 µA, V_{DD} = V_{DD} Min.
V_H	Supervoltage for A_9 pin	11.4	12.6	V	CE# = OE# =V_{IL}, WE# = V_{IH}
I_H	Supervoltage Current for A_9 pin		200	µA	CE# = OE# = V_{IL}, WE# = V_{IH}, A_9 = V_H Max.

343 PGM T9.1

TABLE 9: RECOMMENDED SYSTEM POWER-UP TIMINGS

Symbol	Parameter	Minimum	Units
$T_{PU-READ}$(1)	Power-up to Read Operation	100	µs
$T_{PU-WRITE}$(1)	Power-up to Program/Erase Operation	100	µs

343 PGM T10.0

TABLE 10: CAPACITANCE (Ta = 25 °C, f=1 Mhz, other pins open)

Parameter	Description	Test Condition	Maximum
$C_{I/O}$(1)	I/O Pin Capacitance	$V_{I/O}$ = 0V	12 pF
C_{IN}(1)	Input Capacitance	V_{IN} = 0V	6 pF

343 PGM T11.1

Note: (1) This parameter is measured only for initial qualification and after a design or process change that could affect this parameter.

TABLE 11: RELIABILITY CHARACTERISTICS

Symbol	Parameter	Minimum Specification	Units	Test Method
N_{END}(1)	Endurance	10,000	Cycles	JEDEC Standard A117
T_{DR}(1)	Data Retention	100	Years	JEDEC Standard A103
V_{ZAP_HBM}(1)	ESD Susceptibility Human Body Model	1000	Volts	JEDEC Standard A114
V_{ZAP_MM}(1)	ESD Susceptibility Machine Model	200	Volts	JEDEC Standard A115
I_{LTH}(1)	Latch Up	100 + I_{DD}	mA	JEDEC Standard 78

343 PGM T12.1

Note: (1) This parameter is measured only for initial qualification and after a design or process change that could affect this parameter.

© 1999 Silicon Storage Technology, Inc.

AC CHARACTERISTICS

TABLE 12: SST39VF800Q/VF800 READ CYCLE TIMING PARAMETERS V_{DD} = 2.7-3.6V

Symbol	Parameter	SST39VF800Q/VF800-70		SST39VF800Q/VF800-90		Units
		Min	Max	Min	Max	
T_{RC}	Read Cycle time	70		90		ns
T_{CE}	Chip Enable Access Time		70		90	ns
T_{AA}	Address Access Time		70		90	ns
T_{OE}	Output Enable Access Time		30		40	ns
T_{CLZ}(1)	CE# Low to Active Output	0		0		ns
T_{OLZ}(1)	OE# Low to Active Output	0		0		ns
T_{CHZ}(1)	CE# High to High-Z Output		20		30	ns
T_{OHZ}(1)	OE# High to High-Z Output		20		30	ns
T_{OH}(1)	Output Hold from Address Change	0		0		ns

343 PGM T13.0

TABLE 13: PROGRAM/ERASE CYCLE TIMING PARAMETERS

Symbol	Parameter	Min	Max	Units
T_{BP}	Word Program time		20	µs
T_{AS}	Address Setup Time	0		ns
T_{AH}	Address Hold Time	30		ns
T_{CS}	WE# and CE# Setup Time	0		ns
T_{CH}	WE# and CE# Hold Time	0		ns
T_{OES}	OE# High Setup Time	0		ns
T_{OEH}	OE# High Hold Time	10		ns
T_{CP}	CE# Pulse Width	40		ns
T_{WP}	WE# Pulse Width	40		ns
T_{WPH} (1)	WE# Pulse Width High	30		ns
T_{CPH} (1)	CE# Pulse Width High	30		ns
T_{DS}	Data Setup Time	30		ns
T_{DH} (1)	Data Hold Time	0		ns
T_{IDA} (1)	Software ID Access and Exit Time		150	ns
T_{SE}	Sector Erase		25	ms
T_{BE}	Block Erase		25	ms
T_{SCE}	Chip Erase		100	ms

343 PGM T14.1

Note 1: This parameter is measured only for initial qualification and after the design or process change that could affect this parameter.

© 1999 Silicon Storage Technology, Inc.

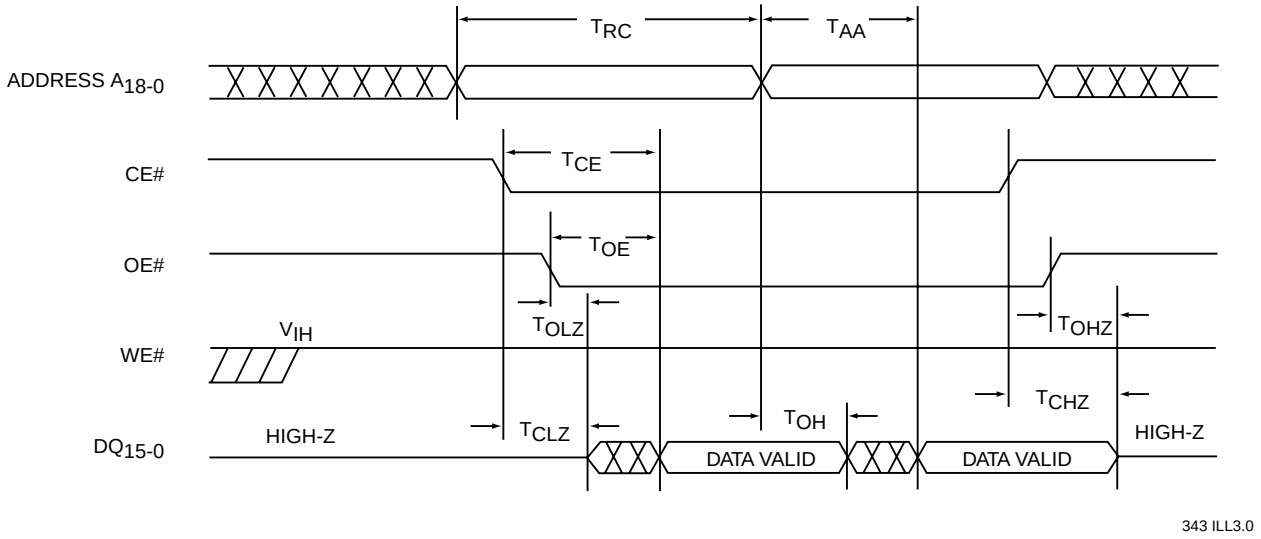

FIGURE 3: READ CYCLE TIMING DIAGRAM

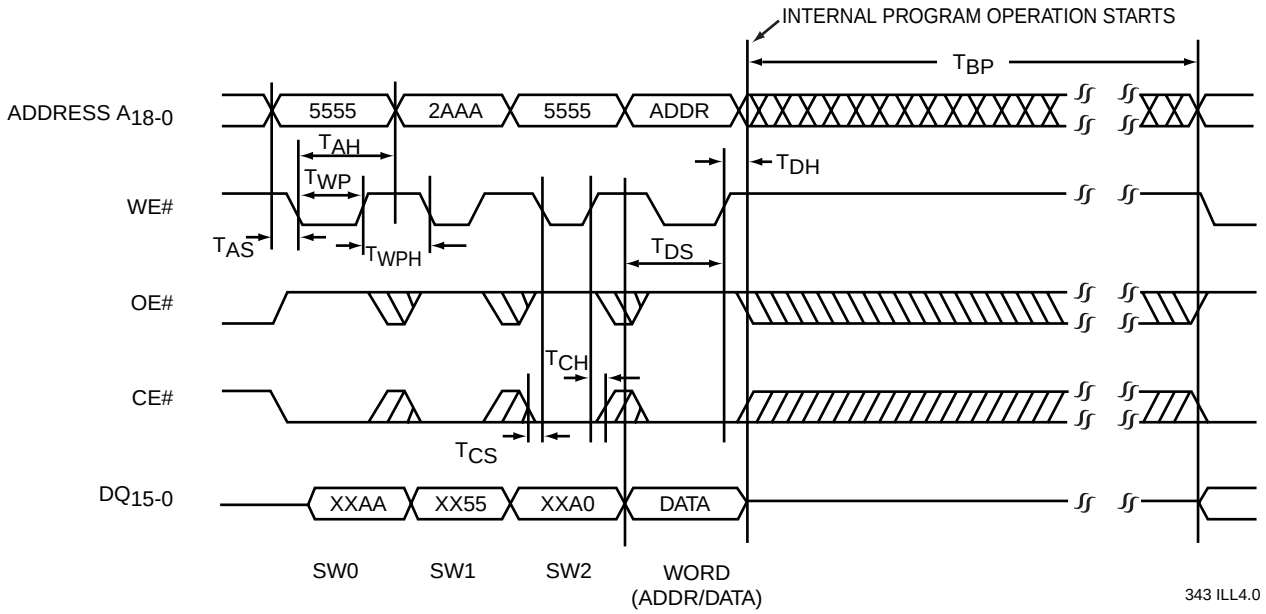

FIGURE 4: WE# CONTROLLED PROGRAM CYCLE TIMING DIAGRAM

© 1999 Silicon Storage Technology, Inc.

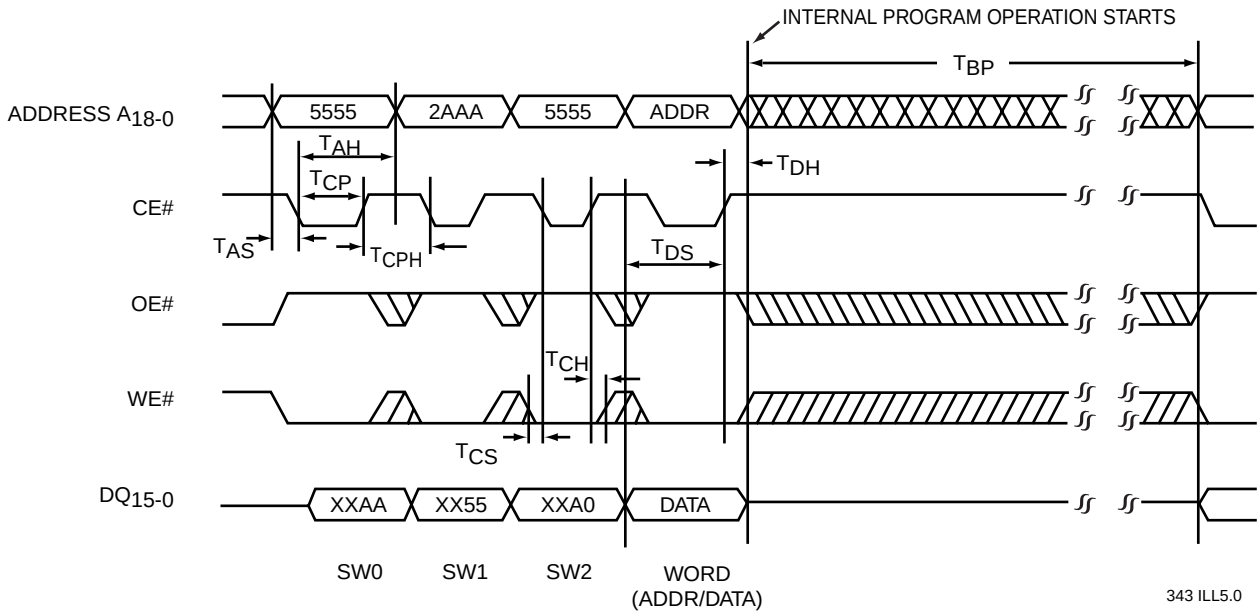

FIGURE 5: CE# CONTROLLED PROGRAM CYCLE TIMING DIAGRAM

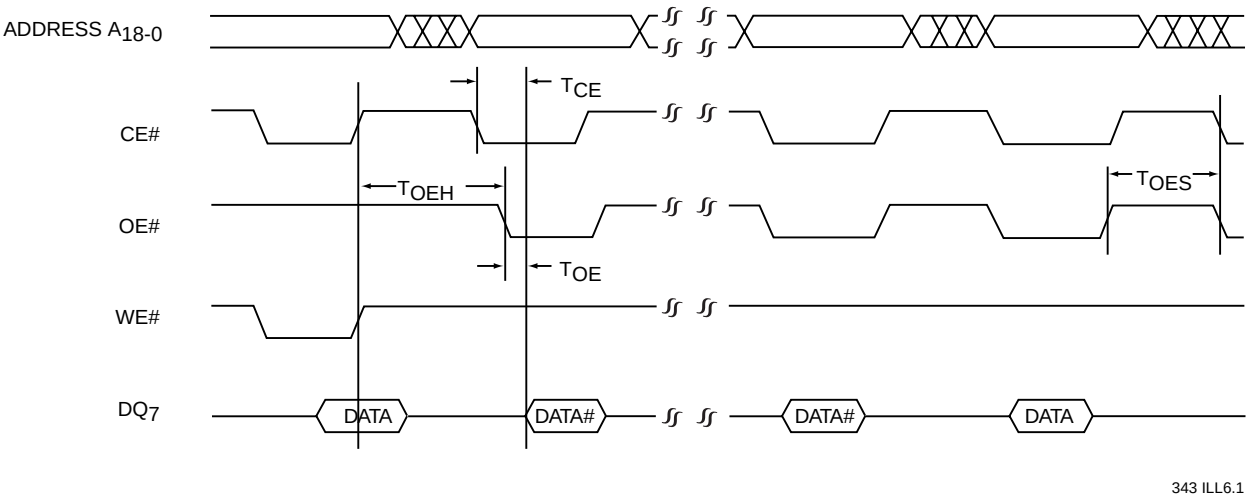

FIGURE 6: DATA# POLLING TIMING DIAGRAM

© 1999 Silicon Storage Technology, Inc.

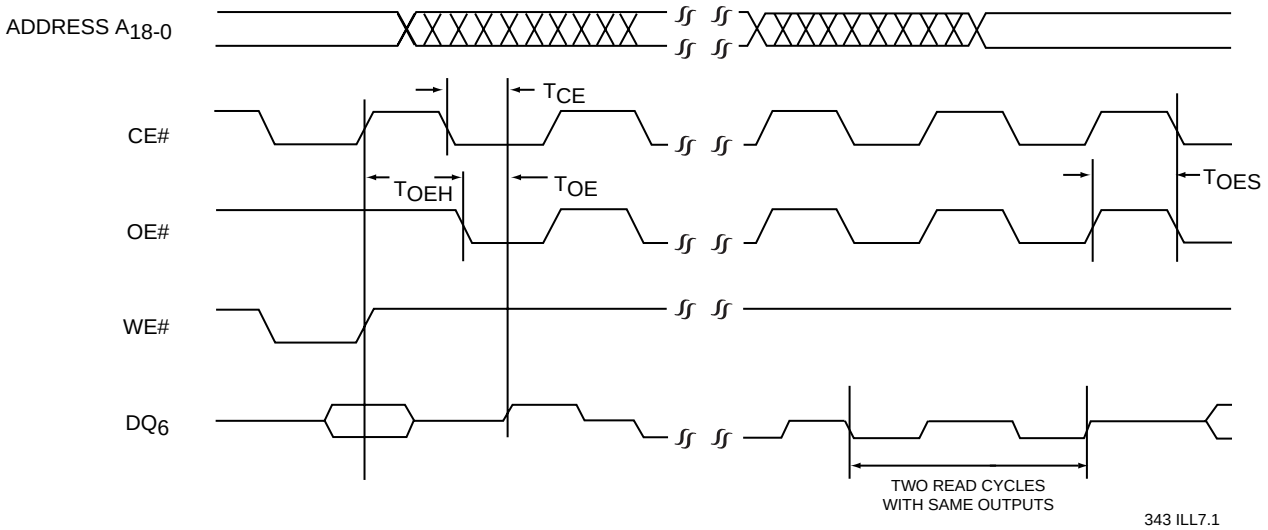

FIGURE 7: TOGGLE BIT TIMING DIAGRAM

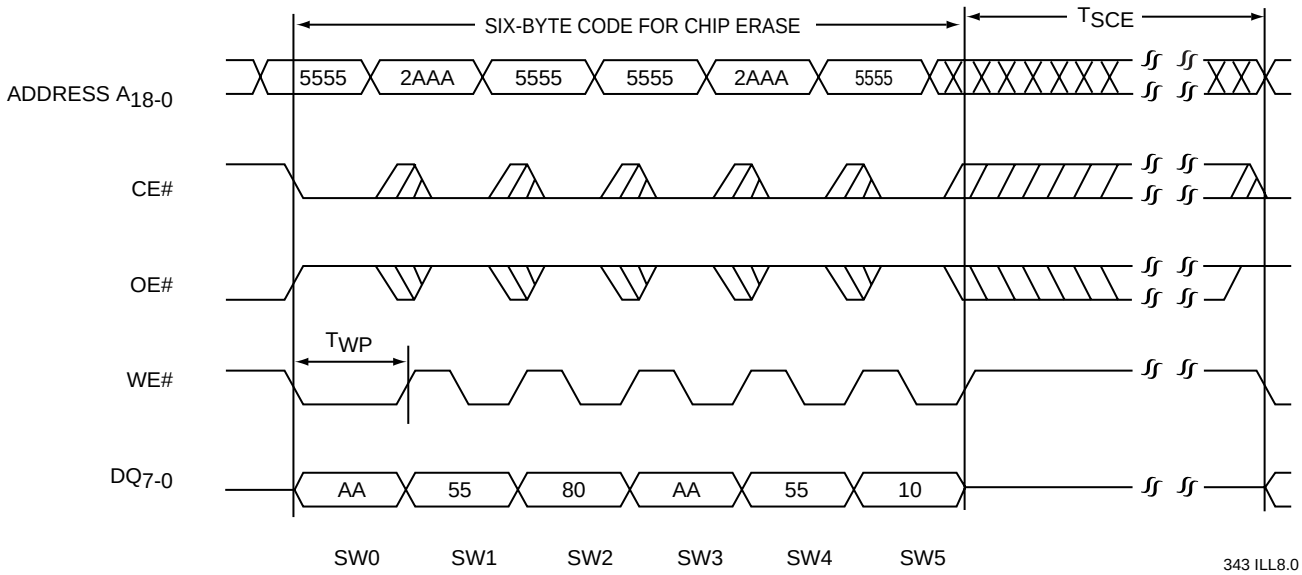

Note: The device also supports CE# controlled chip erase operation. The WE# and CE# signals are interchangeable as long as minimum timings are met. (See Table 13)

FIGURE 8: WE# CONTROLLED CHIP ERASE TIMING DIAGRAM

© 1999 Silicon Storage Technology, Inc.

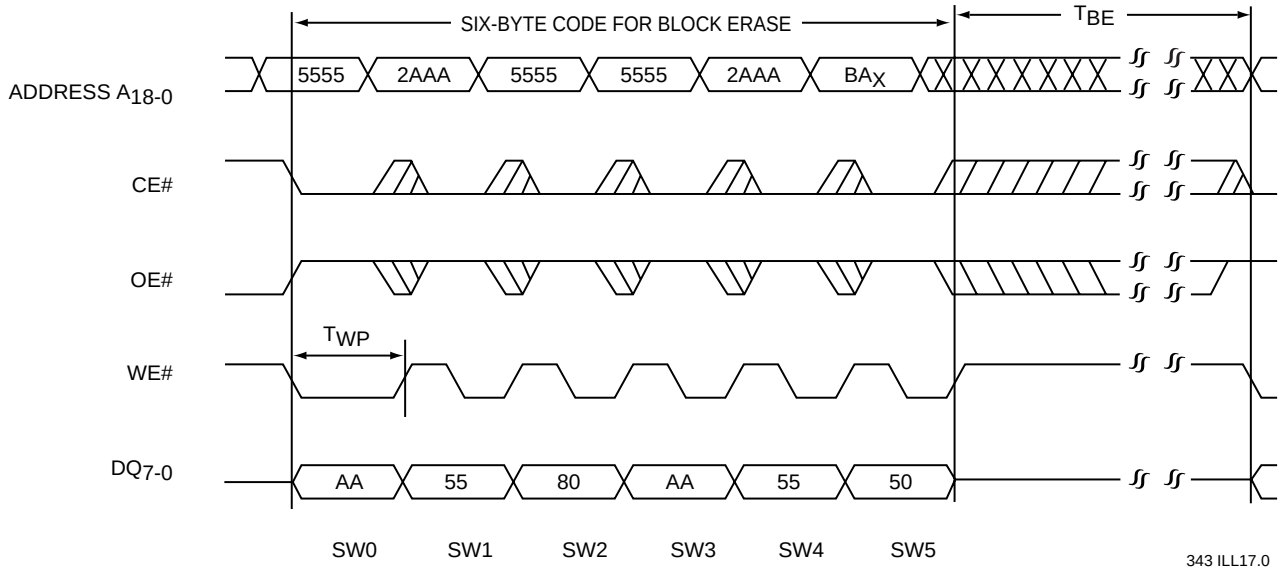

Note: The device also supports CE# controlled block erase operation. The WE# and CE# signals are interchangeable as long as minimum timings are met. (See Table 13)
BA_X = Block Address

FIGURE 9: WE# CONTROLLED BLOCK ERASE TIMING DIAGRAM

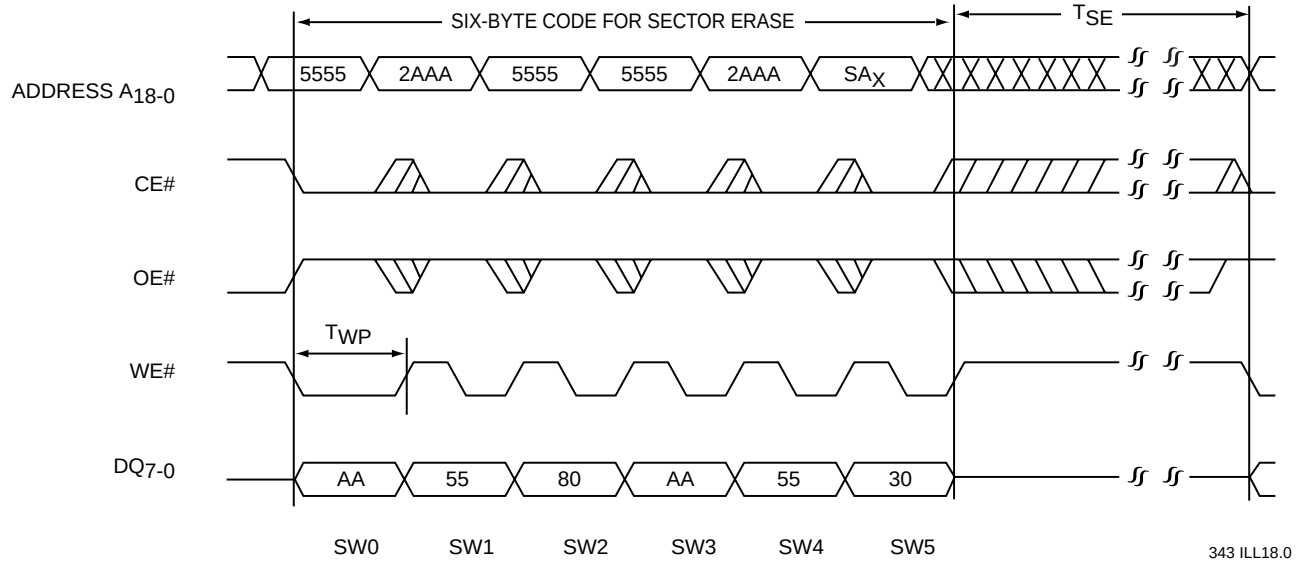

Note: The device also supports CE# controlled sector erase operation. The WE# and CE# signals are interchangeable as long as minimum timings are met. (See Table 13)
SA_X = Sector Address

FIGURE 10: WE# CONTROLLED SECTOR ERASE TIMING DIAGRAM

© 1999 Silicon Storage Technology, Inc.

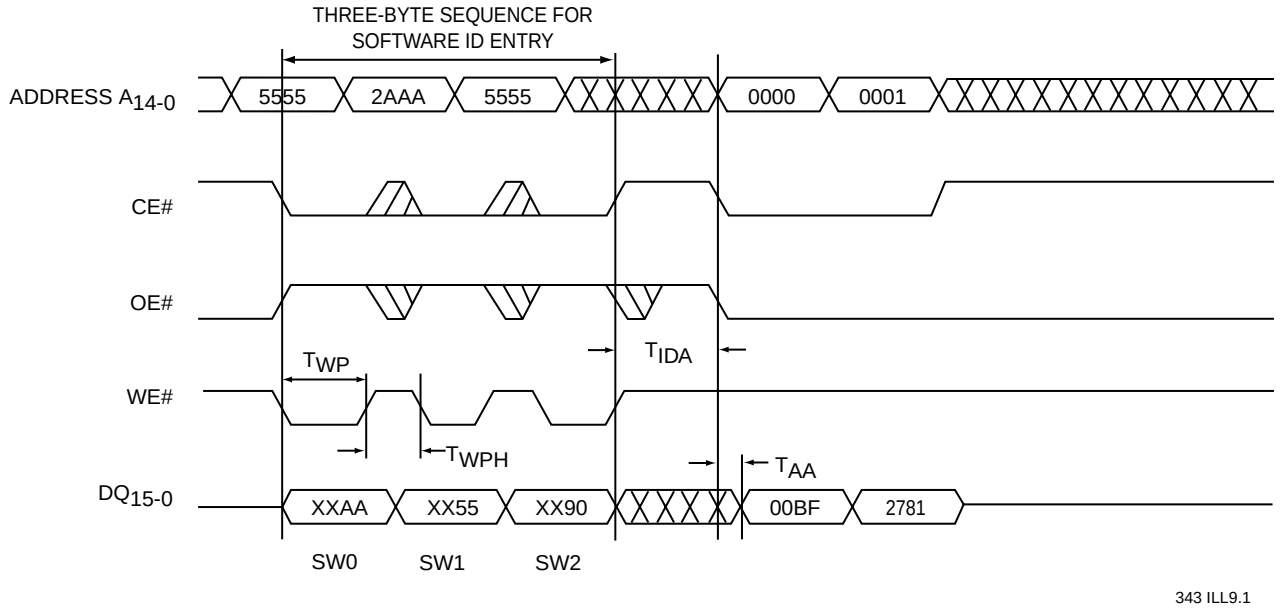

FIGURE 11: SOFTWARE ID ENTRY AND READ

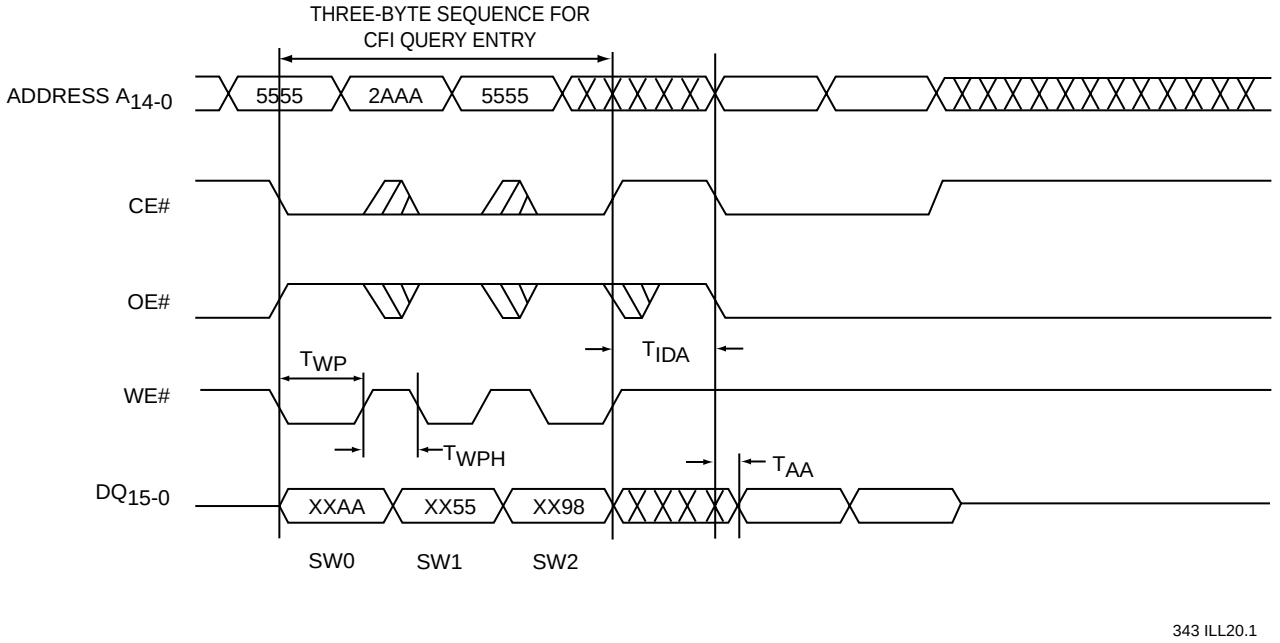

FIGURE 12: CFI QUERY ENTRY AND READ

© 1999 Silicon Storage Technology, Inc.

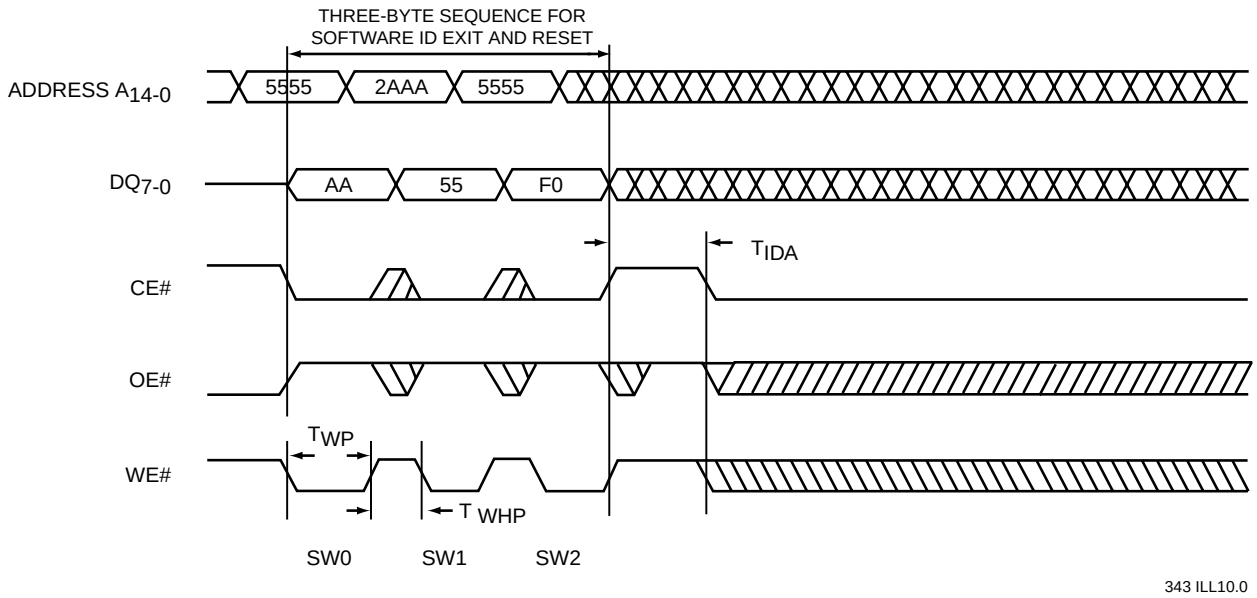

FIGURE 13: SOFTWARE ID EXIT/CFI EXIT

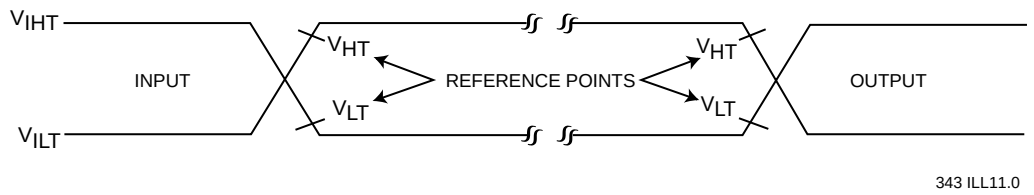

AC test inputs are driven at V_{IHT} (2.4 V) for a logic “1” and V_{ILT} (0.4 V) for a logic “0”. Measurement reference points for inputs and outputs are V_{HT} (2.0 V) and V_{LT} (0.8 V). Inputs rise and fall times (10% ↔ 90%) are <10 ns.

Note: V_{HT}–V_{HIGH} Test
V_{LT}–V_{LOW} Test
V_{IHT}–V_{INPUT} HIGH Test
V_{ILT}–V_{INPUT} LOW Test

FIGURE 14: AC INPUT/OUTPUT REFERENCE WAVEFORMS

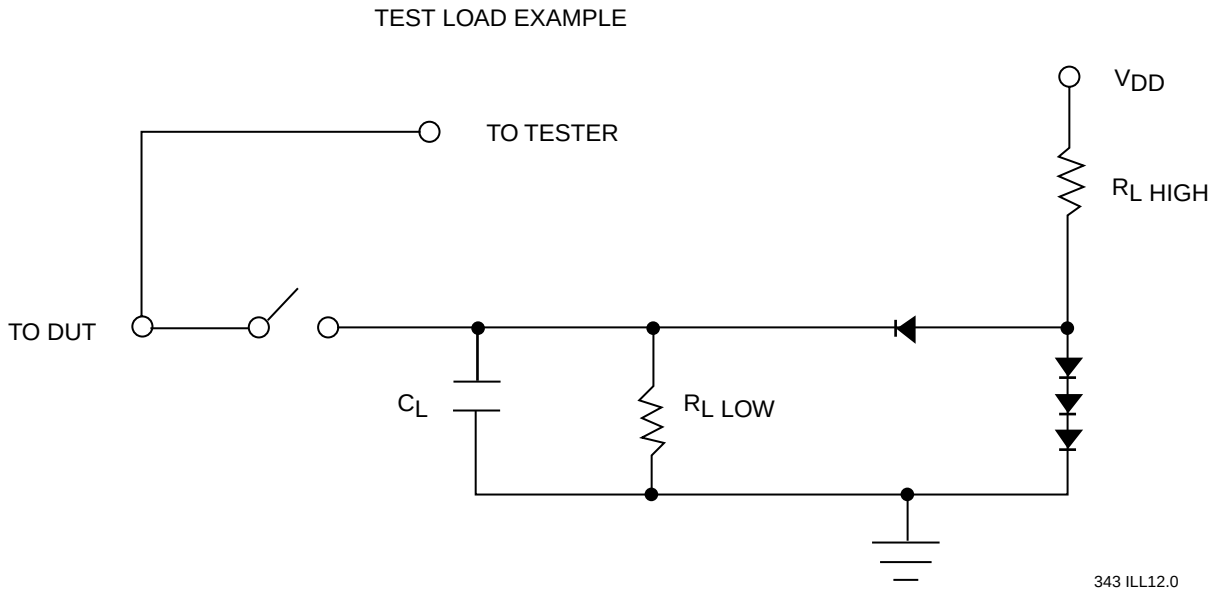

FIGURE 15: A TEST LOAD EXAMPLE

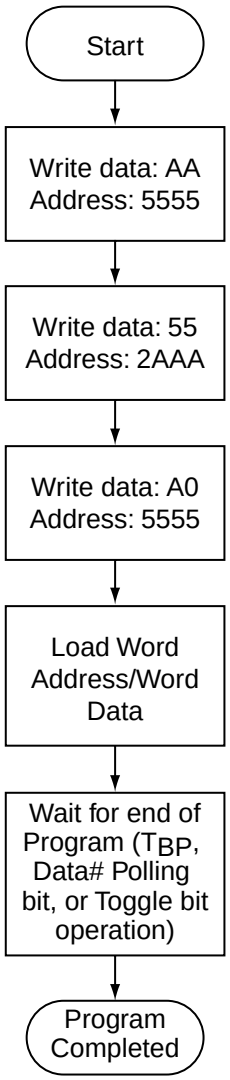

343 ILL13.1

FIGURE 16: WORD PROGRAM ALGORITHM

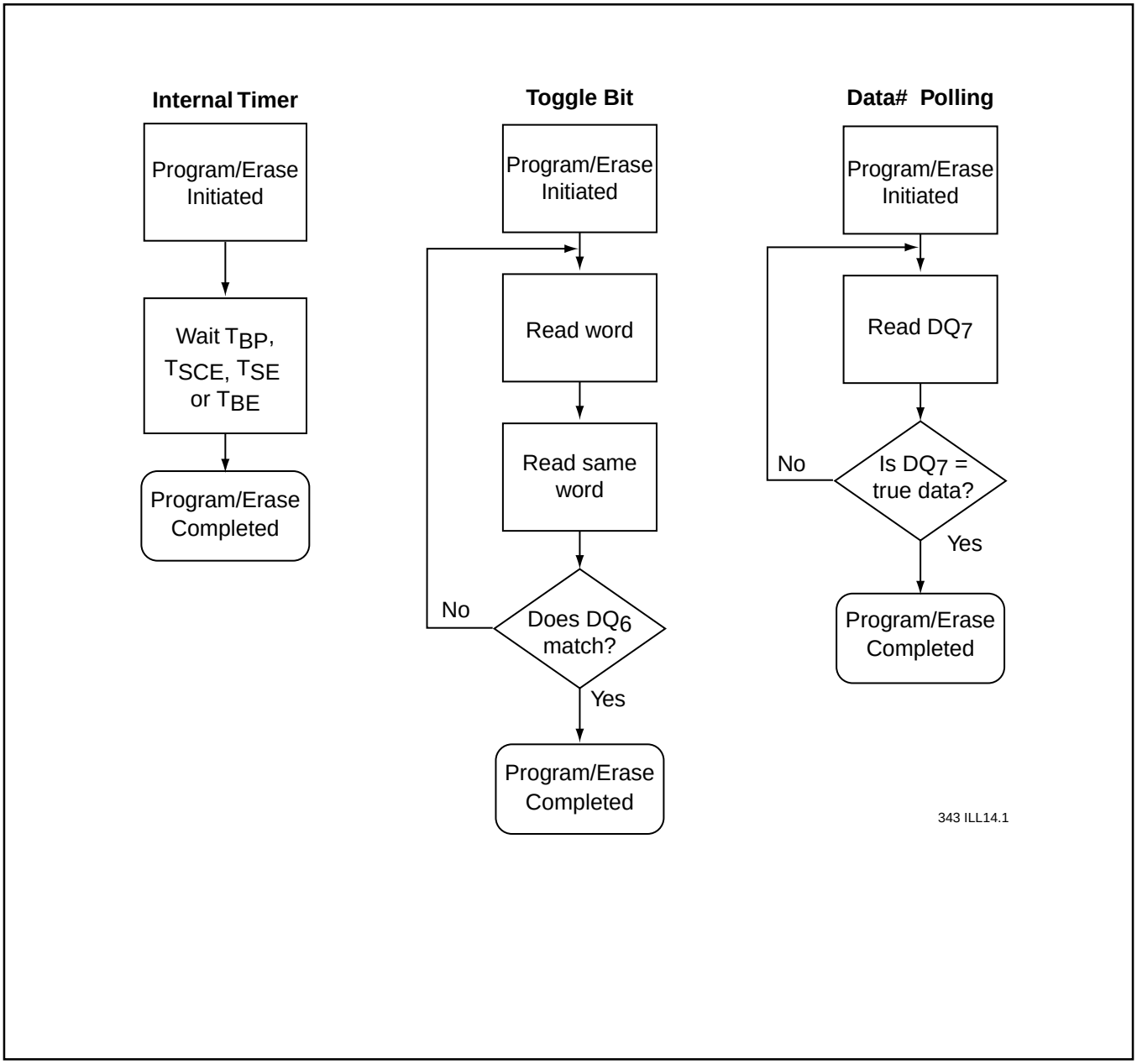

FIGURE 17: WAIT OPTIONS

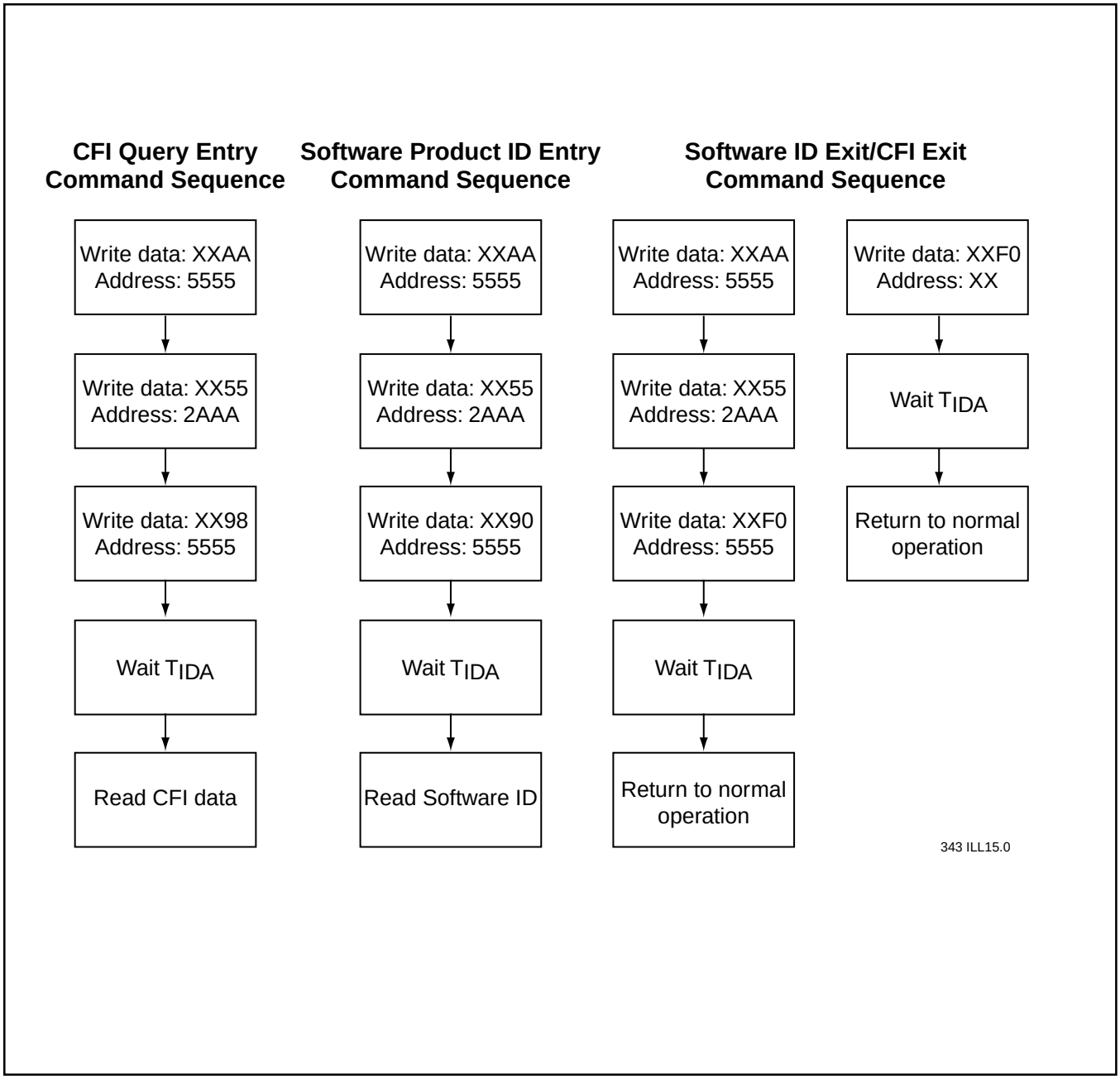

FIGURE 18: SOFTWARE PRODUCT ID/CFI COMMAND FLOWCHARTS

© 1999 Silicon Storage Technology, Inc.

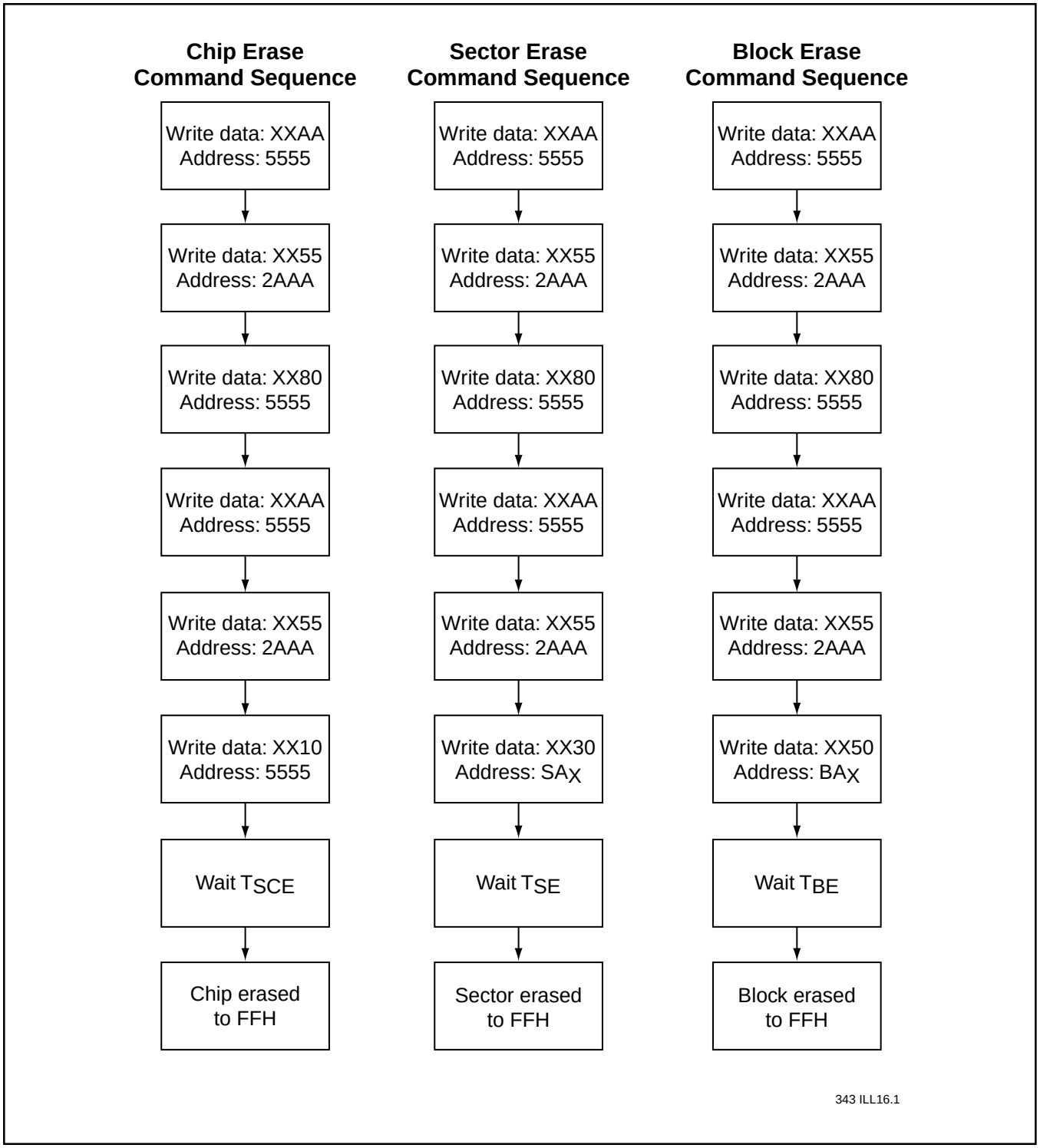

FIGURE 19: ERASE COMMAND SEQUENCE

Device		Speed	Suffix1	Suffix2
SST39VF800Q	-	XXX	- XX	- XX

Package Modifier
K = 48 leads
Numeric = Die modifier

Package Type
E = TSOP (12mm x 20mm)
B = TFBGA (0.8 mm pitch; 8mm x 10mm)
U = Unencapsulated die

Temperature Range
C = Commercial = 0° to 70°C
I = Industrial = -40° to 85°C

Minimum Endurance
4 = 10,000 cycles

Read Access Speed
70 = 70 ns, 90 = 90 ns

Version
Q = V_{DDQ} pin for I/O power supply

Voltage
V = 2.7-3.6V

SST39VF800Q Valid combinations

SST39VF800Q-70-4C-EK	SST39VF800Q-70-4C-BK	
SST39VF800Q-90-4C-EK	SST39VF800Q-90-4C-BK	SST39VF800Q-90-4C-U1
SST39VF800Q-70-4I-EK	SST39VF800Q-70-4I-BK	
SST39VF800Q-90-4I-EK	SST39VF800Q-90-4I-BK	

SST39VF800 Valid combinations

SST39VF800-70-4C-EK	SST39VF800-70-4C-BK	
SST39VF800-90-4C-EK	SST39VF800-90-4C-BK	SST39VF800-90-4C-U1
SST39VF800-70-4I-EK	SST39VF800-70-4I-BK	
SST39VF800-90-4I-EK	SST39VF800-90-4I-BK	

Example : Valid combinations are those products in mass production or will be in mass production. Consult your SST sales representative to confirm availability of valid combinations and to determine availability of new combinations.

© 1999 Silicon Storage Technology, Inc.

PACKAGING DIAGRAMS

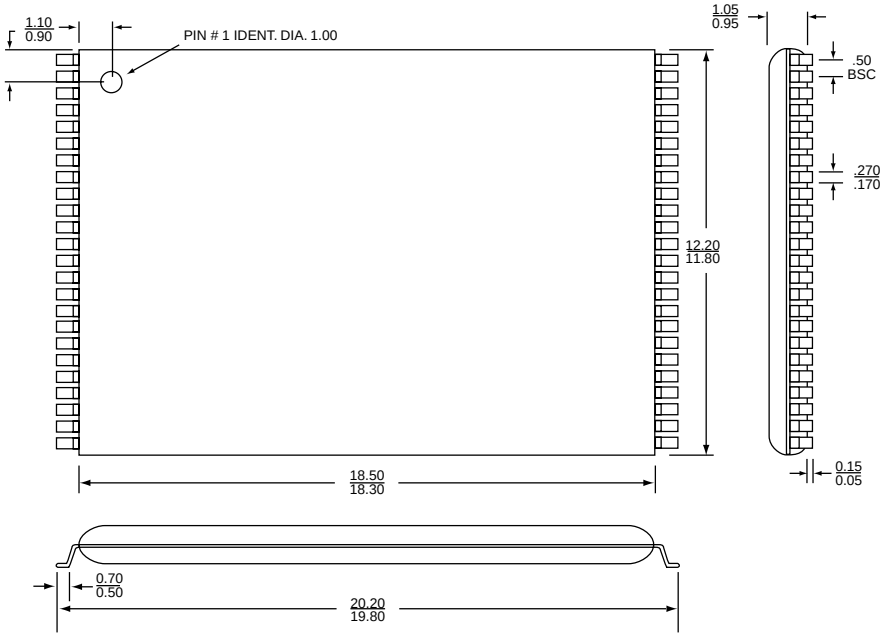

Note: 1. Complies with JEDEC publication 95 MO-142 DD dimensions, although some dimensions may be more stringent.
2. All linear dimensions are in metric (min/max).
3. Coplanarity: 0.1 (±.05) mm.

48.TSOP-EK-ILL.0

48-LEAD THIN SMALL OUTLINE PACKAGE (TSOP)
SST PACKAGE CODE: EK

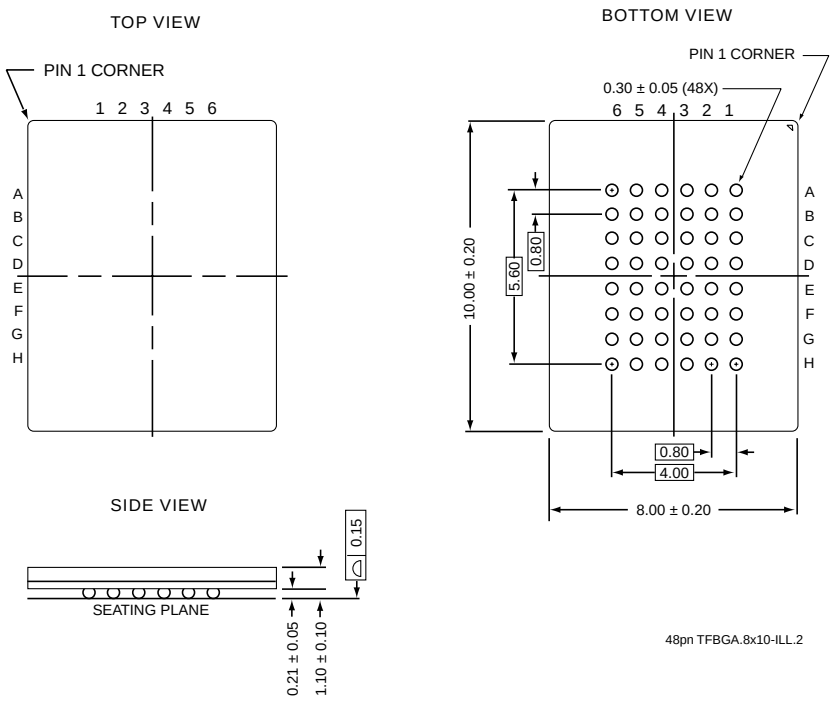

48pn TFBGA.8x10-ILL.2

48-BALL THIN FINE-PITCH BALL GRID ARRAY (TFBGA)
SST PACKAGE CODE: BK

© 1999 Silicon Storage Technology, Inc.