38 3850

Multimodul™ connectors, pitch 2.5 mm

Multimodul™ pin header, upright, with locking latch, with retaining hooks

Approvals:

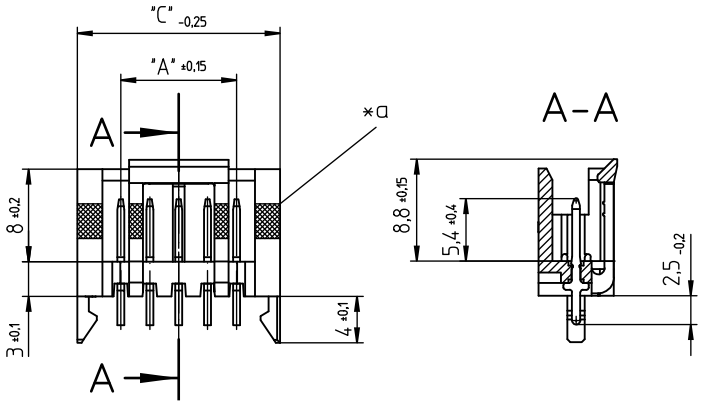


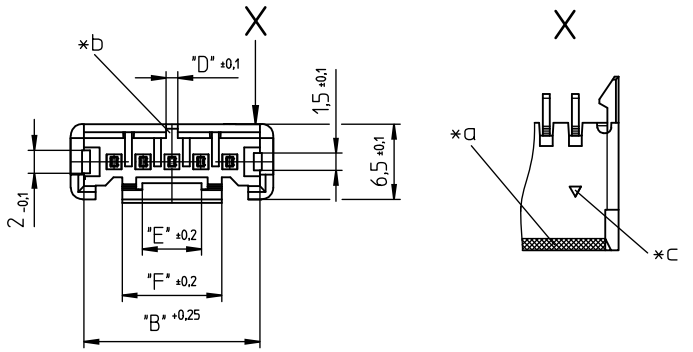


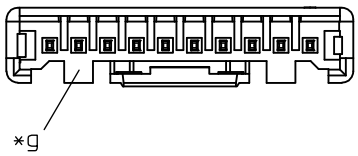


## Environmental conditions

| | |
|---|---|
| Temperature range | -40 °C/+120 °C [1] |

[1] upper limit temperature (insulating body) RTI (electrical) of the UL Yellow Card

## Materials

| | |
|---|---|
| Insulating body | PBT GF, V-0 according to UL94 – 3850 … 00<br>PA GF, V-0 according to UL94 – 3850 … 30 [1] |
| Contact pin | CuZn, pre-nickel and tin-plated |

[1] 385… 00: component UL-approved
385… 30: component glow wire resistant (GWT 750 °C), testing acc. to IEC 60695-2-11, assessment acc. to IEC 60335-1 (flame < 2 s)

## Mechanical data

| | |
|---|---|
| Further data | proposed keyings on request |

## Electrical data (at $T_{amb}$ 20 °C)

| | |
|---|---|
| Rated current | 3 A ($T_U$ 60 °C) |
| Rated voltage | 160 V AC |
| Material group | IIIa (IEC)/3 (UL) (CTI ≥ 175) – 3850 … 00<br>IIIa (IEC)/2 (UL) (CTI ≥ 250) – 3850 … 30 |
| Creepage distance | 1,9 mm |
| Clearance | 1,9 mm |
| Insulation resistance | > 1 GΩ |

## Associated products

Counterparts

2,54 MKB  2,54 MKBL  3823

4143 01

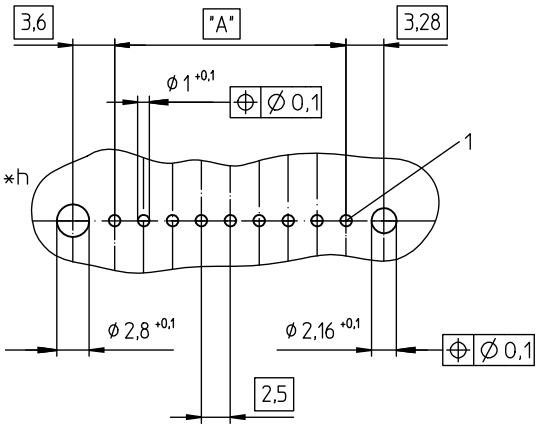


*a color keying strip
*b keying groove; 2 and 3 pole versions with additional options
*c marking contact 1
*d shape of locking latch depending on material and pole numbers
*g 2 supports from 10 poles on
*h printed circuit board layout, solder side view

# 38 3850

| Designation | Pole Number | PU (Pieces) | MDQ (Pieces) | Dimensions | | | | | |
|---|---|---|---|---|---|---|---|---|---|
| | | | | A (mm) | B (mm) | C (mm) | D (mm) | E (mm) | F (mm) |
| 3850 02 | 2 | 1000 | 5000 | 2.5 | 7.7 | 10.0 | 1.5/1.0 | 1.3 | 3.6 |
| 3850 03 | 3 | 1000 | 5000 | 5.0 | 10.2 | 12.5 | 1.5/1.0 | 2.6 | 6.1 |
| 3850 04 | 4 | 1000 | 5000 | 7.5 | 12.7 | 15.0 | 1.0 | 5.1 | 8.6 |
| 3850 05 | 5 | 1000 | 5000 | 10.0 | 15.2 | 17.5 | 1.0 | 5.1 | 8.6 |
| 3850 06 | 6 | 500 | 5000 | 12.5 | 17.7 | 20.0 | 1.0 | 5.1 | 8.6 |
| 3850 07 | 7 | 500 | 5000 | 15.0 | 20.2 | 22.5 | 1.0 | 5.1 | (8.6) *d |
| 3850 08 | 8 | 500 | 5000 | 17.5 | 22.7 | 25.0 | 1.0 | 5.1 | (8.6) *d |
| 3850 09 | 9 | 500 | 5000 | 20.0 | 25.2 | 27.5 | 1.0 | 5.1 | (8.6) *d |
| 3850 10 | 10 | 500 | 5000 | 22.5 | 27.7 | 30.0 | 1.0 | 5.1 | (8.6) *d |
| 3850 11 | 11 | 500 | 5000 | 25.0 | 30.2 | 32.5 | 1.0 | 5.1 | (8.6) *d |
| 3850 12 | 12 | 500 | 5000 | 27.5 | 32.7 | 35.0 | 1.0 | 5.1 | (8.6) *d |
| 3850 13 | 13 | 500 | 5000 | 30.0 | 35.2 | 37.5 | 1.0 | 5.1 | (8.6) *d |
| 3850 14 | 14 | 500 | 5000 | 32.5 | 37.7 | 40.0 | 1.0 | 5.1 | (8.6) *d |
| 3850 15 | 15 | 500 | 5000 | 35.0 | 40.2 | 42.5 | 1.0 | 5.1 | (8.6) *d |
| 3850 16 | 16 | 500 | 5000 | 37.5 | 42.7 | 45.0 | 1.0 | 5.1 | (8.6) *d |
| 3850 17 | 17 | 500 | 5000 | 40.0 | 45.2 | 47.5 | 1.0 | 5.1 | (8.6) *d |
| 3850 18 | 18 | 500 | 5000 | 42.5 | 47.7 | 50.0 | 1.0 | 5.1 | (8.6) *d |
| 3850 19 | 19 | 500 | 5000 | 45.0 | 50.2 | 52.5 | 1.0 | 5.1 | (8.6) *d |
| 3850 20 | 20 | 500 | 5000 | 47.5 | 52.7 | 55.0 | 1.0 | 5.1 | (8.6) *d |

Designation to be completed by further details (e.g. for keying, color or material options).

**Packaging:**
in bulk, in a cardboard box