SPECIFICATION, INSTALLATION AND OPERATION MANUAL

READ ALL INSTRUCTIONS BEFORE USE

Models:
AXH.FDFSSQ.09 / AXH.FDFSSQ.12 / AXH.FDFSSQ.15

innovative solutions

STODDART®

Revision: 02 - 11/02/2021 - A

Page Intentionally Left Blank

Introduction

Your New Airex Product 3
Australia and New Zealand Warranty 4
Warranty Period
Warranty Registration
General Precautions 4

Installation

Product Overview 5
Setting Up 6
Handling
Unpacking
Positioning
Electrical Connection 7
Information
Adjustable Shelves 8
Adjustable Shelves 8
Installing the Shelves
Rear Sliding Doors 8
Installing the Sliding Doors

Specification

General Drawing 9
AXH.FDFSSQ.09
AXH.FDFSSQ.12

Specification

AXH.FDFSSQ.15

Operation

Initial Start-up & Operation 11
Controller
Initial Start Up
Food Temperature
Loading Restrictions
After Service - Information
After Service - Storage
Temperature Adjustment 12

Cleaning and Maintenance

Cleaning 13
General Information
Corrosion Protection
Surface Finish
Cleaning Schedule
Materials Required
Display (Daily)
Doors
Display Glass
External Surfaces
Ventilation Panels / Filter
Troubleshooting 15
Troubleshooting Procedures
Disposal 16

Due to continuous product research and development,
the information contained herein is subject to change without notice.

Your New Airex Product

Thank you for choosing this quality Airex product.
All Airex products are designed and manufactured to meet the needs of food service professionals. By caring for and maintaining your new Airex product in accordance with these instructions, will provide many years of reliable service.

Stoddart is a wholly Australian owned company, which manufactures and/or distributes a comprehensive range of food service equipment for kitchens, food preparation and presentation. Stoddart products are manufactured and/or engineered in Australia to provide excellent results whilst offering value-for-money, ease-of-use and reliability.

Carefully read this instruction booklet, as it contains important advice for safe installation, operation and maintenance. Keep this booklet on hand in a safe place for future reference by other operators or users.

Disclaimer

The manufacturer and distributor cannot be held responsible or liable for any injuries or damages of any kind occurred to persons, units or others, due to abuse and misuse of this unit in regards to installation, removal, operation, servicing or maintenance, or lack of conformity with the instructions indicated in this documentation.

All units made by the manufacturer are delivered assembled, where possible, and ready to install. Any installation, removal, servicing, maintenance and access or removal of any parts, panels or safety barriers that is not permitted, does not comply in accordance to this documentation, or not performed by a **TRAINED AND AUTHORISED SPECIALIST** will result in the **IMMEDIATE LOSS OF THE WARRANTY.**

The manufacturer cannot be held responsible or liable for any unauthorised modifications or repairs. All modifications or repairs must be approved by the manufacturer in writing before initiating. All modifications or repairs performed to this unit must be performed at all times by a **TRAINED AND AUTHORISED SPECIALIST.**

Stoddart design, manufacture and distribute Food Service Equipment (appliances) exclusively for the commercial market. This appliance is not designed nor intended for household or domestic use and must not be used for this purpose.

This product is intended for commercial use, and in line with Australian electrical safety standards the following warnings are provided:

- This product is not intended for use by persons (including children) with reduced physical, sensory or mental capabilities, or lack of experience and knowledge, unless they have been given supervision or instruction concerning the use of the product by a person responsible for their safety. Children should be supervised to ensure that they do not play with the product
- If the supply cord is damaged, it must be replaced by the manufacturer, its service agent or similarly qualified persons in order to avoid a hazard

Warranty & Registration

Australia and New Zealand Warranty

Warranty Period

All Stoddart manufactured and distributed products are covered by Stoddart's standard Australia and New Zealand Product Warranty (minimum 12 month on-site parts and labour, terms and conditions apply). Further to this standard warranty, certain products have access to an extended warranty. Full terms, conditions and exclusions can be found using the below Link/QR code.

Warranty Registration

To register your new product, Follow the below Link/QR code.

www.stoddart.com.au/warranty-information

General Precautions

When using any electrical unit, safety precautions must always be observed.

Our units have been designed for high performance. Therefore, the unit must be used exclusively for the purpose for which it has been designed.

- All units MUST be installed according to the procedures stated in the installation section of this manual
- In the case of new personnel, training is to be provided before operating the equipment
- **DO NOT** use this unit for any other purpose than its intended use
- **DO NOT** store explosive substances such as aerosol cans with a flammable propellant in or near this unit
- Keep fingers out of "pinch point" areas
- Unit is not waterproof **DO NOT** use jet sprays, hoses or pour water over/on the exterior of the unit
- Only use this unit with voltage specified on the rating label
- **DO NOT** remove any cover panels that may be on the unit
- **DO NOT** use sharp objects to activate controls
- If any fault is detected, refer to troubleshooting
- The manufacturer declines any liability for damages to persons and/or things due to an improper/wrong and/or unreasonable use of the machine
- Only specifically trained/qualified Technicians (Stoddart, one of our service agents, or a similarly qualified persons) should carry out any and all repairs, maintenance and services

Due to continuous product research and development,
the information contained herein is subject to change without notice.

Product Overview

	IMPORTANT **This unit is not designed to cook down products, it only maintains them above the regulated 65°C serving temperature.**

	WARNING **Use ONLY R7S 118mm LED LAMP 8W 3000K. Replacement with a different model lamp could cause significant damage and render the cabinet electrically unsafe**

	CAUTION **This unit heated components. Hot surfaces can burn DO NOT touch these surfaces**

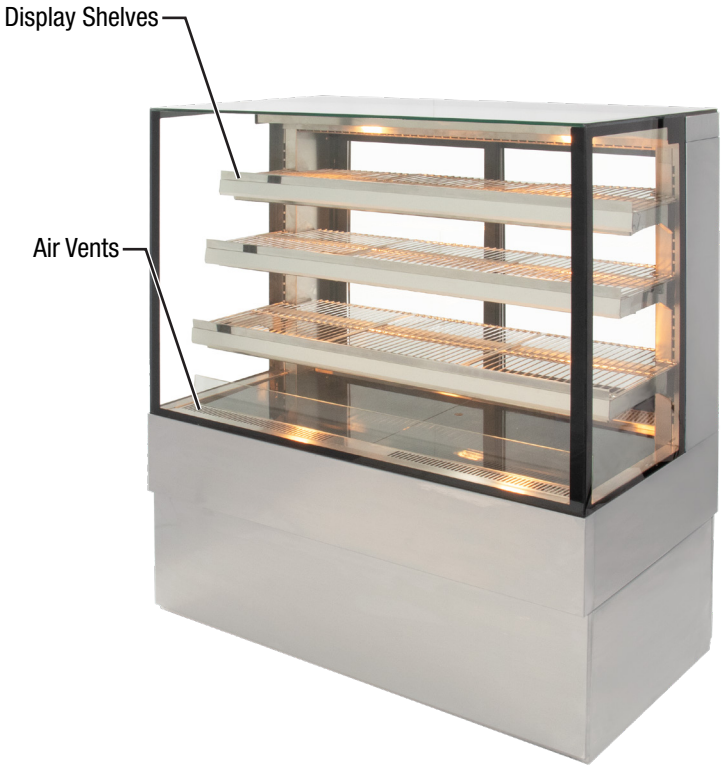

Setting Up

WARNING

Improper installation, adjustments, alterations, service or maintenance can cause property damage, injury or death.

Handling

- Use suitable means to move the unit;
  - For smaller items use two people
  - For large items a fork lift, pallet trolley or similar (the forks should reach completely beneath the pallet)

Unpacking

- Check the unit for damage before and after unpacking. If unit is damaged, contact the distributor and/or manufacturer
- Should any item have physical damage, report the details to the freight company and to the agent responsible for the dispatch within seven (7) days of receipt. No claims will be accepted or processed after this period
- The unit is supplied fully assembled
- Remove all protective plastic film, tapes, ties and packers before installing and operating
- Clean off any remaining residue from the interior/exterior of the unit using a clean cloth dampened with warm soapy water

Positioning

- When moving the unit, ensure the cabinet is upright at all times
- When positioning the unit, avoid direct sunlight, warm drafts and heated areas for the unit to maintain the normal operating temperature
- Do not position the unit in:
  - Wet areas
  - Near heat and/or steam sources
  - Near flammable substances
- Ensure the unit is positioned on a level surface to allow all the condensation to properly burn off and prevent the burn off tray overflowing
- Allow an air gap between the unit and other objects or surfaces. A minimum gap of 100mm from all sides is recommend for normal operational use (if the unit is near any heat sensitive material we suggest you allow additional space), example below
- After positioning the unit, allow the refrigeration gas to settle for at least 2 hours before switching ON

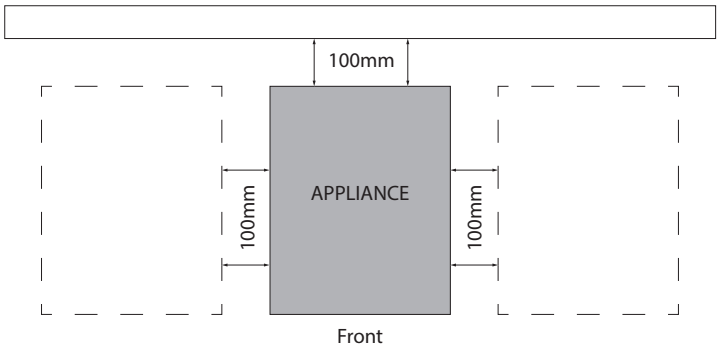

- Please consult national and local standards to ensure that your unit is positioned in accordance with any existing requirement

Due to continuous product research and development,
the information contained herein is subject to change without notice.

Electrical Connection

Information

	WARNING
	This unit must be installed in accordance with AS/NZS 60335.1 **Some procedures in this manual require the power to the equipment to be turned off and isolated. Turn the power OFF at the power point and unplug the power supply lead by the plug body. If the power point is not readily accessible turn the equipment off at the isolation switch or the circuit breaker in the switchboard. Attach a yellow "CAUTION-DO NOT OPERATE" tag. This must be performed where relevant unless the procedures specify otherwise.** **FAILURE TO DO SO MAY RESULT IN ELECTRIC SHOCK.**

Single Phase Units:

- Supplied and fitted with an appropriately rated plug and lead, indicated as:
  - 10A plug & lead fitted

Notes:

- If the supply cord is damaged, it must be replaced by the manufacturer, its service agent or similarly qualified persons in order to avoid a hazard. Please contact Stoddart for parts and we will advise how to do this in order to avoid any electrical hazard
- The power cable should be dry and/or isolated from moisture or water

Due to continuous product research and development,
the information contained herein is subject to change without notice.

Adjustable Shelves

Installing the Shelves

Note: Shelves are different sizes

1. Insert the two air deflector glass panels into the channel, located behind the front vent
2. Insert two shelf arms into the vertical slots (ensure shelf arms are positioned at the same height)
3. Place the front and rear horizontal shelf bars onto the shelf arms (ensure shelf bars lock into the shelf arms). Run the LED power lead on the inside of the shelf arm and connect to the nearest socket
4. Install the glass panels

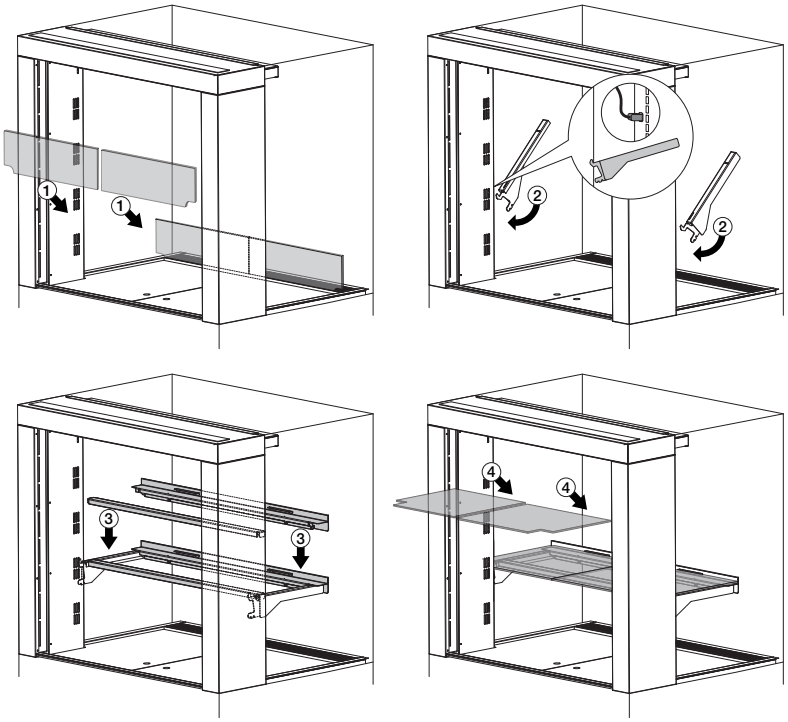

Rear Sliding Doors

Installing the Sliding Doors

Note: When inserting, ensure the rollers on the door are at the bottom to place on the door rail. Ensure the first door is placed on the back rail to allow the second door to be inserted.

1. Insert the top into the top door INSERT and push UP
2. Swing the door IN and drop the door DOWN into the door rail
3. Slide door across
4. Repeat for the second door

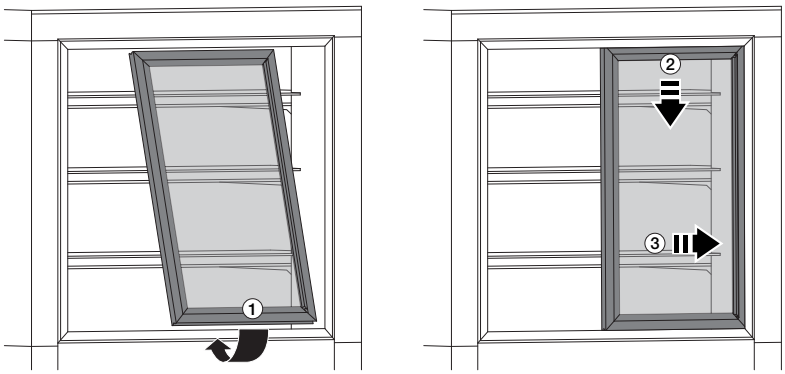

Due to continuous product research and development,
the information contained herein is subject to change without notice.

General Drawing

AXH.FDFSSQ.09

Specifications

Model	**AXH.FDFSSQ.09**
W x D x H (mm)	870 x 688 x 1350
Weight	160kg
Operation	60°C - 80°C
Power	220 - 240V 10A plug & lead

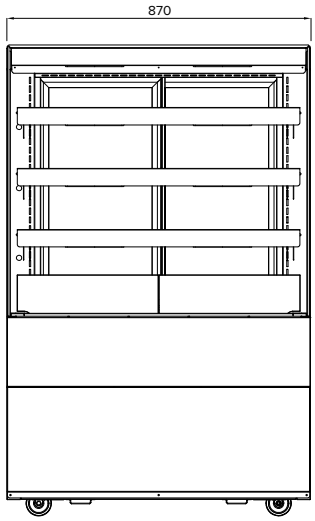

FRONT VIEW

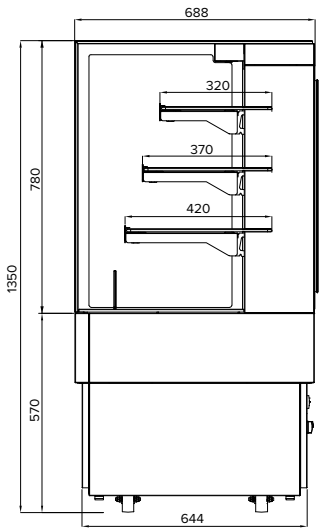

SIDE VIEW

AXH.FDFSSQ.12

Specifications

Model	**AXH.FDFSSQ.12**
W x D x H (mm)	1170 x 688 x 1350
Weight	210kg
Operation	60°C - 80°C
Power	220 - 240V 10A plug & lead

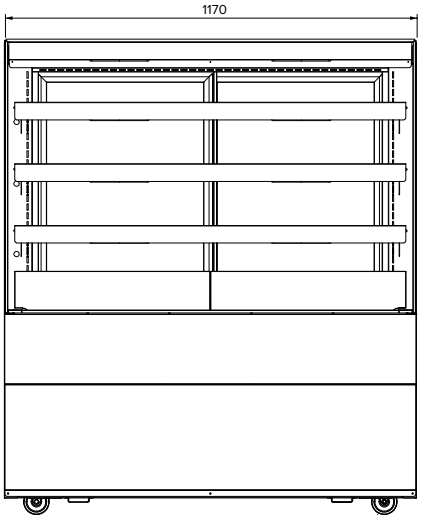

FRONT VIEW

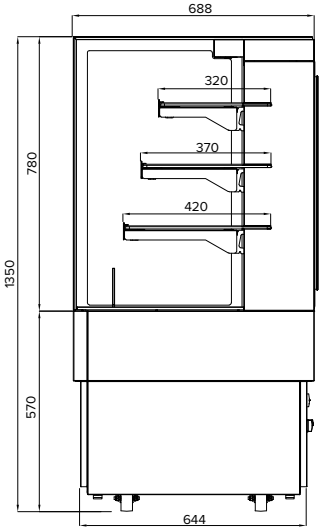

SIDE VIEW

Due to continuous product research and development,
the information contained herein is subject to change without notice.

AXH.FDFSSQ.15

Specifications

Model	**AXH.FDFSSQ.15**
W x D x H (mm)	1470 x 688 x 1350
Weight	250kg
Operation	60°C - 80°C
Power	220 - 240V 10A plug & lead

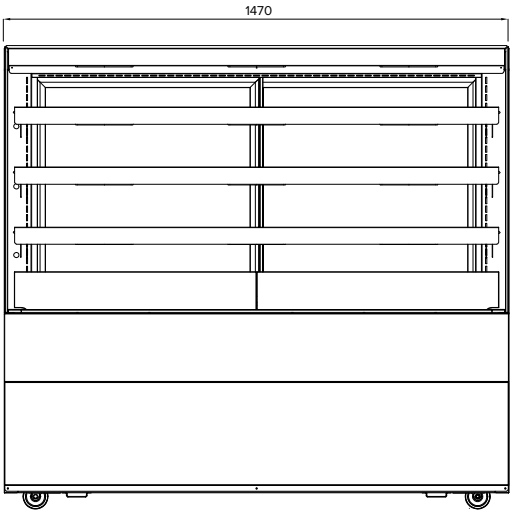

FRONT VIEW

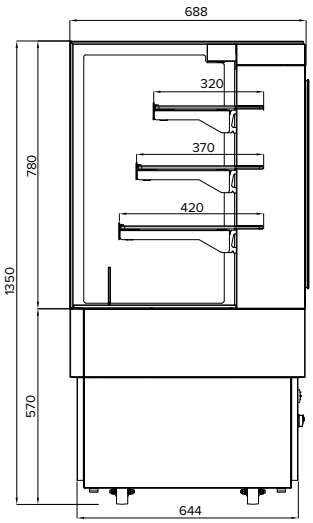

SIDE VIEW

Due to continuous product research and development,
the information contained herein is subject to change without notice.

Initial Start-up & Operation

	IMPORTANT
	This unit is not designed to cook down products, it only maintains them above the regulated 65°C serving temperature

Controller

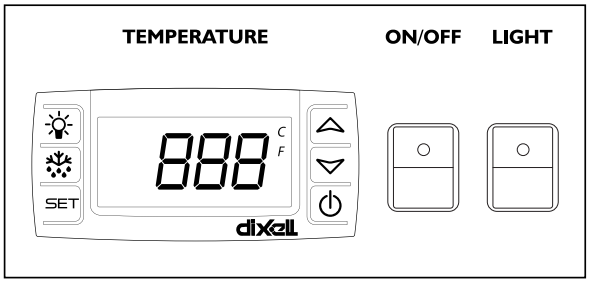

Initial Start Up

- Before switching ON the unit, ensure the unit is installed correctly
- Once switched ON, check that the air is flowing within the unit
- After 45 minutes check the cabinet temperature has reached 60°C - 80°C
- Leave the unit to operate for 1-2 hours to remove any fumes or odours
- Clean the whole unit, including the shelves, before placing in product

Food Temperature

- All food MUST be pre-heated/cooked before placing in the unit
- Attempting to cook food with this unit can lead to food poisoning
- Ensure the unit is maintaining the food temperature over 65°C
- The temperature displayed on the electronic controller is the air temperature NOT the food temperature. It is important to regularly monitor the temperatures of the food items
- Ensure the doors are CLOSED when not loading to maintain temperature

Loading Restrictions

- Air vents must **NOT** be covered
- There should **NOT** be any overhang of products on the shelves
- Shelves are only designed to hold one layer of product. Overloading can break/damage the shelves
- Remove some products if the shelves are flexing or bending
- Shelves should be adjusted to allow air space around all the product for even heating and efficient operation of the heated display. Leave an air space of at least 50mm above the product for air circulation

After Service - Information

- This unit should be turned off after service

After Service - Storage

- Products should not be stored in the unit after service

Due to continuous product research and development,
the information contained herein is subject to change without notice.

Temperature Adjustment

- The temperature range of this unit is 60°C - 80°C
- Different modes require different temperatures
- The temperature probe only measures the temperature of the water/air, NOT the food temperature

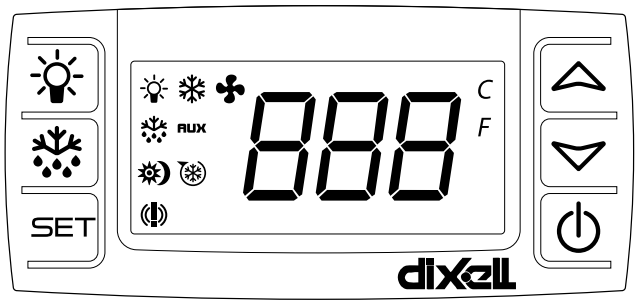

KEY FUNCTIONS:

SET	To display target set point; in programming mode it selects a parameter or confirm an operation.
(DEF)	To start a manual defrost.
(UP)	To see the maximum stored temperature; in programming mode it browses the parameter codes or increases the displayed value.
(DOWN)	To see the minimum stored temperature; in programming mode it browses the parameter codes or increases the displayed value.
	To switch the instrument OFF, if **onF = oFF**.
	Not enabled.

KEY COMBINATIONS:

+	To lock and unlock the keyboard.
SET +	To return to the room temperature display.

HOW TO SEE THE SET POINT:

SET

1. Push and immediately release the **SET** key, the display will show the set point value
2. Push and immediately release the **SET** key or wait 5 seconds to display the probe value again

HOW TO CHANGE THE SET POINT:

1. Push the **SET** key for more than 2 seconds to change the set point value
2. The value of the set point will be displayed and the "°C" LED starts blinking
3. To change the set point value push the ⌃ or ⌄ arrows within 10 seconds
4. To memorise the new set point value push the **SET** key again or wait 10 seconds

Note: To enter in programming mode. (Contact the Stoddart Service Department)

Due to continuous product research and development,
the information contained herein is subject to change without notice.

Cleaning

General Information

- Cleaning is recommended for health and safety purposes and to prolong the life of the unit
- **DO NOT** use abrasive pads or cleaners on the stainless steel or any other metal parts of the unit
- **DO NOT** use industrial chemical cleaners, flammable cleaners, caustic based cleaners or bleaches and bleaching agents, as many will damage the metals and plastics used on this unit
- **DO NOT** remove any screws and/or panels for cleaning (unless directed)
- This unit is **NOT** waterproof, **DO NOT** hose, **DO NOT** pour water directly onto the unit, **DO NOT** immerse in water

Corrosion Protection

- Stainless steel exhibits good resistance to corrosion however, if not properly maintained stainless steel can rust and/or corrode
- Any sign of mild rust and/or corrosion should be thoroughly cleaned with warm soapy water and dried as soon as possible
- NEVER use abrasive pads or cleaners for cleaning
- All metal surfaces should be checked while cleaning for damage, scuffs or scrapes as these can lead to rust and further damage to the product
- Mild rust and/or corrosion can be treated with a commercial cleaning agent that contains citric/oxalic/nitric/phosphoric acid.
  DO NOT use cleaning agents with chlorides or other harsh chemicals as this can cause corrosion.
  After treatment, wash with warm (not hot) soapy water and dry thoroughly
- Thoroughly wipe the surfaces dry after cleaning. **DO NOT** let water pool on the unit. Check crevices and folds for pooling
- When using, ensure all liquids and moisture is cleaned up straight away.
  Food liquids such as juices from vegetables and fruits should not be left on preparation surfaces
- **DO NOT** leave items on the stainless steel such as cutting boards, rubber mats and bottles

Surface Finish

- To protect the polished surface of the stainless steel, it should be dried using a clean dry soft cloth. A light oil can be applied to enhance the stainless steel surface, using a clean cloth apply the oil in the same direction as grained polished finish
- Some commercial stainless steel cleaners can leave residue or film on the metal; this may trap fine particles of food on the surface, thus deeming the surfaces not food safe

IMPORTANT	**Threaded fasteners can loosen in service. Regular inspection and adjustment should be carried out as required**
WARNING	**This unit is NOT waterproof, do NOT hose. DO NOT pour water directly onto the unit. DO NOT immerse in water**
IMPORTANT	**Some commercial stainless steel cleaners leave residue or film on the metal that may entrap fine particles of food, deeming the surface not FOOD SAFE**
WARNING	**Wait until the unit has cooled to a safe temperature before undertaking any cleaning or maintenance. Contact with hot surfaces can cause burns and serious injury**

Cleaning Schedule

- Regular cleaning is recommenced for the unit. This will help to maintain and prolong the efficiency of the unit

Materials Required

- Stainless cleaner
- Non abrasive cleaning pad
- Clean sanitised cloth
- Paper towel
- Warm soapy water
- Appropriate PPE (Personal Protective Equipment)

Display (Daily)

1. Isolate the unit from the power supply
2. Remove shelves and wash separately in a dishwasher or kitchen sink, thoroughly wipe dry after cleaning
3. Use a good quality nylon brush to remove crumbs and small food items
4. Clean using a clean cloth dampened (not wet) with clean warm soapy water until all soil has been removed
5. Thoroughly wipe dry with a soft cloth after cleaning, **DO NOT** allow to air dry. **DO NOT** let water pool, check crevices and folds

Doors

1. Remove sliding doors for cleaning. No organic solvent cleaners should be used on the mirrored glass
2. Clean the glass with a glass cleaner or warm (not hot) soapy water, and a sponge, wiping dry with a squeegee is best
3. Door frames should be cleaned as any other stainless steel or metal surface
4. Doors seals should be checked for cracks before cleaning
5. Sliding door tracks should be vacuumed out and cleaned using a clean cloth dampened (not wet) with clean warm soapy water until all soil has been removed
6. Tracks should be dried thoroughly before replacing the sliding doors

Display Glass

1. Clean the glass with a glass cleaner or warm (not hot) soapy water, and a sponge
2. Using a squeegee, remove all water from the glass

External Surfaces

1. Using a clean cloth dampened (not wet) with clean warm soapy water until any grime has been removed
2. Using a clean sanitised cloth, thoroughly wipe the stainless steel and metal parts dry. **DO NOT** let water pool on the unit, check crevices and folds

Ventilation Panels / Filter

1. Use a vacuum and/or brush to remove dust and debris from the filter and all ventilation panels
2. Do NOT use water or a hose to remove dust or debris

Due to continuous product research and development,
the information contained herein is subject to change without notice.

Troubleshooting

Troubleshooting Procedures

- If any faults/issues occur with the unit, follow the below troubleshooting procedures
- If the troubleshooting procedures do not correct the problem, contact the Stoddart Service Department

WARNING

Technician tasks are only to be completed by qualified service people. Check faults before calling service technician

WARNING

Use ONLY R7S 118mm LED LAMP 8W 3000K. Replacement with a different model lamp could cause significant damage and render the cabinet electrically unsafe

(O) = Operator (T) = Technician Task

Problem	DESCRIPTION	TASK	SOLUTION
Unit not heating	Unit not turned “on” at the power supply	O	Turn power “on” at the power supply
	On/Off” switch on the control panel	O	Switch on the “on/off switch” at the control panel
	Element failure	T	Test & replace the element if necessary
Food too cold/hot	Temperature requires adjusting	O	Adjust temperature using the digital control

Due to continuous product research and development,
the information contained herein is subject to change without notice.

Disposal

If the appliance is no longer of use, please dispose in an environmentally correct way.

The distributor / retailer can contact their local metal recycling centre to collect the remaining cabinet, shelves, etc.

Discarded electric appliances are recyclable and should not be discarded in the domestic waste! Please actively support us in conserving resources and protecting the environment by returning this appliance to the collection centres (if available).

20
PAP

Dispose of packaging in accordance to applicable legal regulations.

Due to continuous product research and development,
the information contained herein is subject to change without notice.

Due to continuous product research and development,
the information contained herein is subject to change without notice.

Australia

Service / Spare Parts
Tel: 1300 307 289
Email: service@stoddart.com.au
Email: spares@stoddart.com.au

Service Request

Sales
Tel: 1300 79 1954
Email: sales@stoddart.com.au

www.stoddart.com.au

Australian Business Number: 16009690251

New Zealand

Service / Spare Parts
Tel: 0800 935 714
Email: service@stoddart.co.nz
Email: spares@stoddart.co.nz

Service Request

Sales / Spare Parts
Tel: 0800 79 1954
Email: sales@stoddart.co.nz
Email: spares@stoddart.co.nz

www.stoddart.co.nz

New Zealand Business Number: 6837694

International

Service / Spare Parts
Tel: +617 3440 7600
Email: service@stoddart.com.au
Email: spares@stoddart.com.au

Service Request

Sales
Tel: +617 3440 7600
Email: sales@stoddart.com.au

www.stoddart.com.au

STODDART®

innovative solutions

Revision Date: 11/02/2021