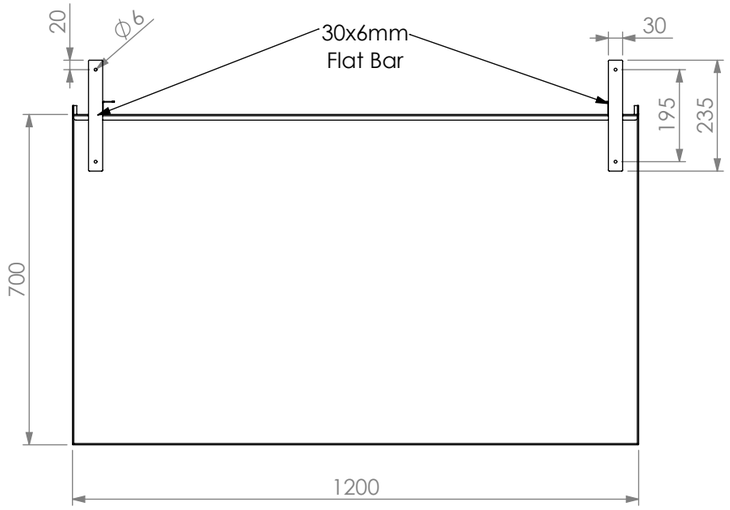

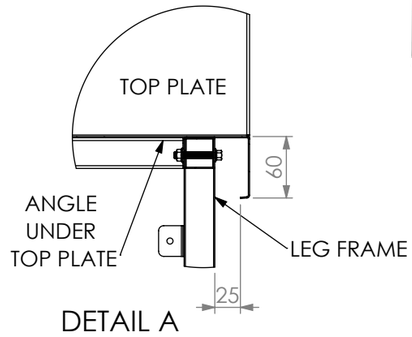

DETAIL A

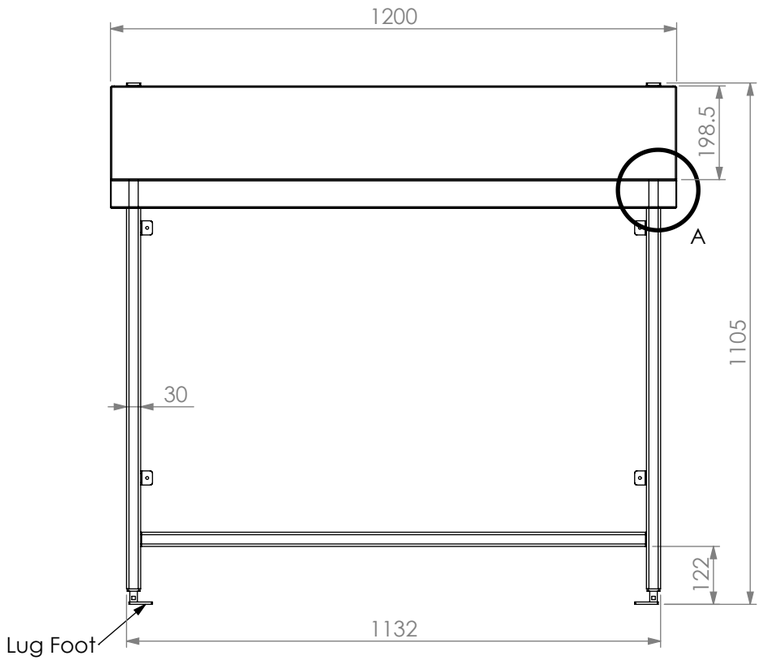

SBM-7-1200

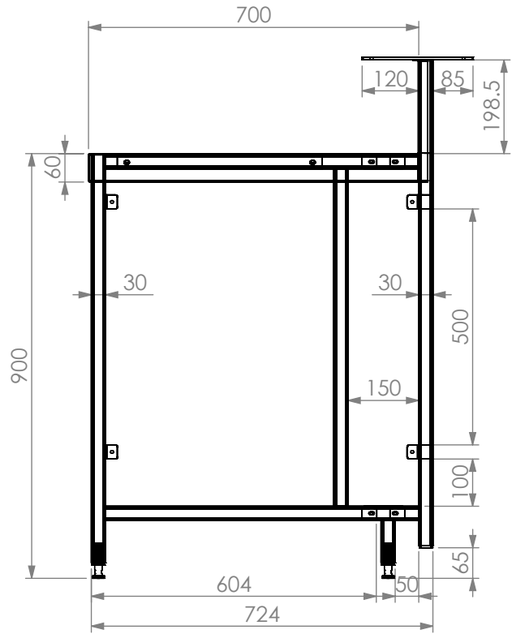

SIMPLY STAINLESS

www.simplystainless.com
Modular Sinks Tables and Shelving

COPYRIGHT © 2019
This drawing is the property of CI GROUP PTY LTD. Tradings as SIMPLY STAINLESS and It may not be copied, reproduced or modified in whole or in part without prior written permission of CI GROUP PTY LTD. SIMPLY STAINLESS reserves the right to change specification and design without notice.

SBM-7-1200
BAR MODULE 1200MM

SCALE : 1:20

CONSTRUCTION NOTES :

1. TOPS MADE FROM 1.2mm 304 STAINLESS STEEL.
2. LEG FRAME MADE FROM 30mm STAINLESS STEEL SQ TUBE.
3. FEET ARE ADJUSTABLE STAINLESS STEEL LUG SHAPED FEET.