GIORIK
INNOVATIVE COOKING EQUIPMENT SINCE 1963

mini touch

ESSENCE OF EVOLUTION **COMBI OVENS**

SPECIFICATION, INSTALLATION & OPERATION MANUAL

(READ ALL INSTRUCTIONS BEFORE USE)

Electric Models:

KM061WT / KM101WT / KM0623WT

innovative solutions

STODDART®

Revision: b - 07/05/2026 - 04

Page Intentionally Left Blank

1.0 Introduction

1.1 Your New Giorik Product 4
1.2 Australia and New Zealand Warranty 5
1.2.1 Warranty Period
1.2.2 Warranty Registration
1.3 General Precautions 6
1.3.1 General Warnings

2.0 Installation

2.1 Setting Up Information 7
2.1.1 Handling
2.1.2 Unpacking
2.1.3 Disposal
2.1.5 Stacked Installation
2.2.Positioning 8
2.2.1 General Information
2.2.2 Spacing
2.2.3 Levelling
2.3 Electrical Connection 10
2.3.1 Information
2.3.2 Wiring
2.4 Water Connection. 13
2.4.1 Chloride Test
2.4.2 Total Dissolved Solids (TDS) Test
2.4.3 Filtration System
2.4.4 Single Water Inlet
2.4.5 Dual Water Inlet
2.5 Drainage Connection 17
2.6 Liquid Detergent Connection 17
2.7 Optional Hand Shower with Magnetic Holder 18
2.8 Optional Recirculating Hood - CEH.KOR.11.1 19
2.8.1 Electrical Connection
2.8.2 Water Connections
2.9 Oven Testing 21

3.0 Specification

3.1 Technical Drawing 22
3.1.1 KM0623WT
3.1.2 KM061WT
3.1.3 KM101WT

4.0 Operation

4.1 General Overview. 24
4.1.1 Control Interface
4.1.2 Cooking Screen Icons:
4.1.3 Cooking Methods
4.2 Setup - Configuration Menu 26
4.2.1 Date and Time / Language
4.2.2 System Info
4.2.3 Language
4.2.4 Display Brightness
4.2.5 Buzzer Volume
4.3 Manual Cooking 28
4.3.1 Initial Settings
4.3.2 Selecting The Cooking Method
4.3.3 Selecting The Temperature
4.3.4 Setting Preheating
4.3.5 Time Setting:
4.3.6 Core Probe:
4.3.7 Delta T(Δ t):
4.3.8 Fan Rotation Speed
4.3.9 Manual Adjustment of Vent
4.3.10 Humidity Percentage in Combi Mode
4.3.11 Steam Phase
4.3.12 Holding Phase
4.3.13 Setting Multiple Cooking Phases (optional)
4.3.14 Cooling Phase
4.3.15 Smoking Phase
4.3.16 To Delete a Phase
4.3.17 Saving a Recipe
4.3.18 Delete a Cooking Program
4.3.19 Rename a Cooking Program
4.3.20 Move a Cooking Program
4.4 Automatic Cooking 39
4.4.1 Cooking Program Selection
4.4.2 How To Use The Automatic Cooking Program
4.5 Special Automatic Cooking Programs. 40
4.5.1 Rack Control - Manual Setting
4.5.2 Rack Control - Menu Setting
4.5.3 Rack Control - Easy Service
4.6 Special Functions. 43
4.6.1 Cooling Of The Chamber
4.6.2 Delayed Start
4.7 One Touch 44
4.8 Importing / Exporting Recipes and Log To USB 45
4.8.1 Import / Export
4.9 Display LOG 46
4.10 HACCP Protocol 46

Contents continued on next page

Due to continuous product research and development,
the information contained herein is subject to change without notice.

5.0 Cleaning and Maintenance

5.1 Cleaning 47
5.1.1 Cleaning and Maintenance Schedule
5.1.2 Materials Required
5.1.3 General Information
5.1.4 Corrosion Protection
5.1.5 Surface Finish
5.1.6 Cleaning External Surfaces
5.1.7 Cleaning Internal Cavity
5.1.8 Cleaning Glass Door
5.1.9 Cleaning Internal Rack
5.1.10 Inspect Door Seal
5.1.11 Inspect Light Switch
5.1.12 Control Panel Ventilation Filter
5.1.13 Humidity Vent
5.2 Automatic Cleaning. 51
5.2.1 Wash Selection
5.2.2 Start the Wash Program
5.2.3 Stop the Wash Program
5.3 Liquid Detergent Connection 53
5.5 Troubleshooting 54
5.5.1 Common Problems
5.5.2 Door Micro Switch
5.5.3 Motor Thermal Breaker
5.5.4 Oven Chamber Safety Thermostat
5.5.5 Technical Problems / Alarm Code
5.6 Scheduled Maintenance Service History 56
5.6.1 Service Log
5.7 Accessories and Consumables 57
5.7.1 Spare Parts

6.0 Notes

6.1 Notes. 58

1.1 Your New Giorik Product

Thank you for choosing this quality Giorik product.
All Giorik products are designed and manufactured to meet the needs of food service professionals. By caring for and maintaining this new Giorik product in accordance with these instructions, will provide many years of reliable service.

Stoddart is a wholly Australian owned company, which manufactures and/or distributes a comprehensive range of food service equipment for kitchens, food preparation and presentation. Stoddart products are manufactured and engineered to provide excellent results whilst offering value-for-money, ease-of-use and reliability.

Carefully read this instruction booklet, as it contains important advice for safe installation, operation and maintenance. Keep this booklet on hand in a safe place for future reference by other operators or users.

Disclaimer

The manufacturer/distributor cannot be held responsible or liable for any injuries or damages of any kind that occur to persons, units or others, due to abuse and misuse of this unit in regards to installation, removal, operation, servicing or maintenance, or lack of conformity with the instructions indicated in this documentation.

All units made by the manufacturer/distributor are delivered assembled, where possible, and ready to install. Any installation, removal, servicing, maintenance and access or removal of any parts, panels or safety barriers that is not permitted, does not comply in accordance to this documentation, or not performed by a **TRAINED AND AUTHORISED SPECIALIST** will result in the **IMMEDIATE LOSS OF THE WARRANTY.**

The manufacturer/distributor cannot be held responsible or liable for any unauthorised modifications or repairs. All modifications or repairs must be approved by the manufacturer/distributor in writing before initiating. All modifications or repairs performed to this unit must be performed at all times by a **TRAINED AND AUTHORISED SPECIALIST.**

Stoddart design, manufacture & distribute Food Service Equipment (appliances) exclusively for the commercial market.
This appliance is not designed nor intended for household or domestic use and must not be used for this purpose.

This product is intended for commercial use, and in line with Australian electrical safety standards the following warnings are provided:

- This product is not intended for use by persons (including children) with reduced physical, sensory or mental capabilities, or lack of experience and knowledge, unless they have been given supervision or instruction concerning the use of the product by a person responsible for their safety. Children should be supervised to ensure that they do not play with the product
- If the supply cord is damaged, it must be replaced by the manufacturer, its service agent or similarly qualified persons in order to avoid a hazard

Due to continuous product research and development,
the information contained herein is subject to change without notice.

STODDART®

Warranty & Registration

1.2 Australia and New Zealand Warranty

1.2.1 Warranty Period

All Stoddart manufactured and distributed products are covered by Stoddart's standard Australia and New Zealand Product Warranty (minimum 12 month on-site parts and labour, terms and conditions apply). Further to this standard warranty, certain products have access to an extended warranty. Full terms, conditions and exclusions can be found using the below Link/QR code.

1.2.2 Warranty Registration

To register your new product, Follow the below Link/QR code.

Australia
CLICK HERE

New Zealand
CLICK HERE

1.3 General Precautions

When using any electrical unit, safety precautions must always be observed.

- All units **MUST** be installed according to the procedures stated in the installation section of this manual
- In the case of new personnel, training is to be provided before operating the equipment
- **DO NOT** use this unit for any other purpose than its intended use
- **DO NOT** store explosive substances such as aerosol cans with a flammable propellant in or near this unit
- Keep fingers out of “pinch point” areas
- Unit is not waterproof **DO NOT** use jet sprays, hoses or pour water over/on the exterior of the unit
- Only use this unit with voltage specified on the rating label
- **DO NOT** remove any cover panels that may be on the unit
- **DO NOT** use sharp objects to activate controls
- If any fault is detected, refer to troubleshooting
- The manufacturer declines any liability for damages to persons and/or things due to an improper/wrong and/or unreasonable use of the machine
- Only specifically trained/qualified Technicians (Stoddart, one of our service agents, or a similarly qualified persons) should carry out any and all repairs, maintenance and services

1.3.1 General Warnings

- DO NOT USE OR STORE FLAMMABLE MATERIALS IN OR NEAR THIS APPLIANCE
- DO NOT SPRAY AEROSOLS IN THE VICINITY OF THIS APPLIANCE WHILE IT IS IN OPERATION
- DO NOT MODIFY THIS APPLIANCE
- DO NOT PLACE ARTICLES ON OR AGAINST THIS APPLIANCE

The equipment complies with the essential requirements of the Low Voltage Directive 2006/95/EC and Electromagnetic Compatibility Directive 2004/108/EC
It meets the provisions of the following electrical and Watermark standards:

- AS/NZS 60335.1
- AS/NZS 60335.2.42
- AS/NZS 1869
- WMTS-101

Due to continuous product research and development,
the information contained herein is subject to change without notice.

2.1 Setting Up Information

	IMPORTANT
	To be installed only by an authorised service technician

	WARNING
	Improper installation, adjustments, alterations, service or maintenance can cause property damage, injury or death

2.1.1 Handling

- Use suitable means to move the unit;
  - For smaller items use two people
  - For large items a fork lift, pallet trolley or similar (the forks should reach completely beneath the pallet)

2.1.2 Unpacking

- Check the unit for damage before and after unpacking. If unit is damaged, contact the distributor and manufacturer
- Should any item have physical damage, report the details to the freight company and to the agent responsible for the dispatch within seven (7) days of receipt. No claims will be accepted or processed after this period
- Remove all protective plastic film, ties and packers before installing and operating
- Clean off any remaining residue from the interior/exterior of the unit using a clean cloth dampened with warm soapy water

2.1.3 Disposal

- At the end of the appliance's working life, make sure it is scrapped & components recycled properly
- Current environmental protection laws in the state/country of use must be observed
- Doors must be removed before disposal
- Power supply cable must be removed before disposal
- For further information on the recycling of this product, contact the local dealer/agent or the local body responsible for waste disposal

2.1.5 Stacked Installation

	IMPORTANT
	For stacked oven installations, this manual is to be used in conjunction with the stacking installation manual (supplied with stacking kit)

2.2.Positioning

IMPORTANT

DO NOT install unit under a bench.
Under Bench installation will void warranty

2.2.1 General Information

- The oven must be installed under an extraction canopy that meets AS 1668.2.
- Have a smooth, level floor which can bear the weight of the appliance at full load
- Have a room temperature above +4°C with a maximum humidity of 70%;
- Comply with the regulations in force in terms of safety in the workplace and the systems;
- Not contain potentially explosive materials or substances;
- Be dedicated to food preparation. In addition, a gas-fired appliance requires, by law, rooms with a surface area and ventilation that are suitable for the power of the oven and that have a means of externally evacuating flue gases
- Please consult national and local standards to ensure that your unit is positioned and ventilated in accordance with any existing requirements
- Do not allow cables or other items to rest/hang over the exhaust vents
- Do not install unit under a bench
- No equipment is to be installed/placed on the Service compartment (top of oven) excluding stacked applications using a Stoddart stacking kit and/or Stoddart Recirculating Hood. The service compartment must be easily accessible. Failure to adhere may add service costs due to lack of access.

2.2.2 Spacing

The sides of the Combi oven must have the following minimum clearances:

Heat Source
500mm clearance from another heat source, in order to protect the oven components.
For distances under 500mm, it is mandatory for Stoddart heat shields to be fitted (for a minimum distance of 50mm from the surface of the oven). Failure to adhere to minimum clearances may void the oven warranty.

Non-Heat Source
50mm clearance from a non-heat source to the surface of the oven. Failure to adhere to minimum clearances may void the oven warranty.

Heat Source

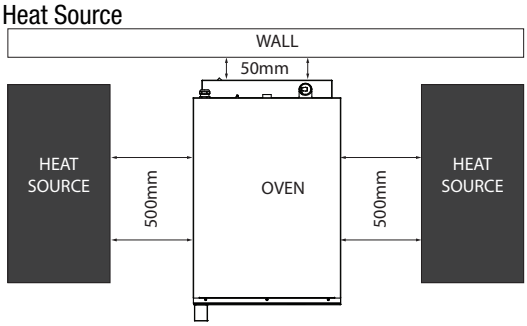

Heat Source With Heat Shield

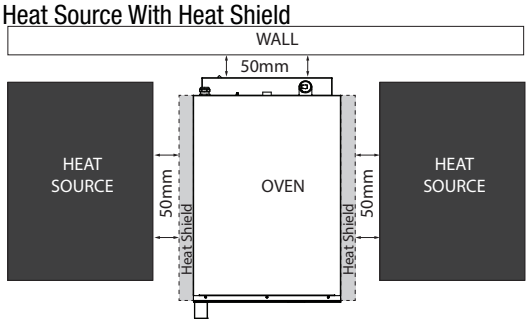

Non - Heat Source

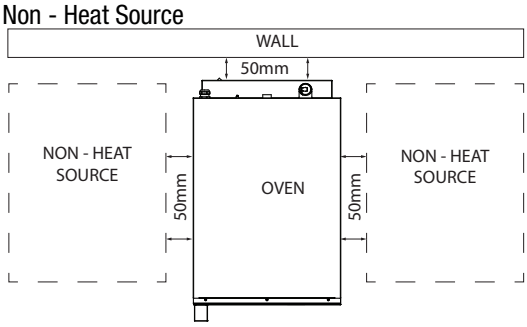

Due to continuous product research and development,
the information contained herein is subject to change without notice.

2.2.3 Levelling

Using a spirit level, ensure that the Combi oven is level. Adjust the foot height to level Combi oven
If using a stand, level the stand by adjusting the feet, then level the Combi oven

IMPORTANT

DO NOT STORE ANY ITEMS BETWEEN THE OVEN AND STAND
THE AIR INTAKE IS LOCATED AT THE BASE OF THE OVEN
DO NOT BLOCK AIR INTAKE

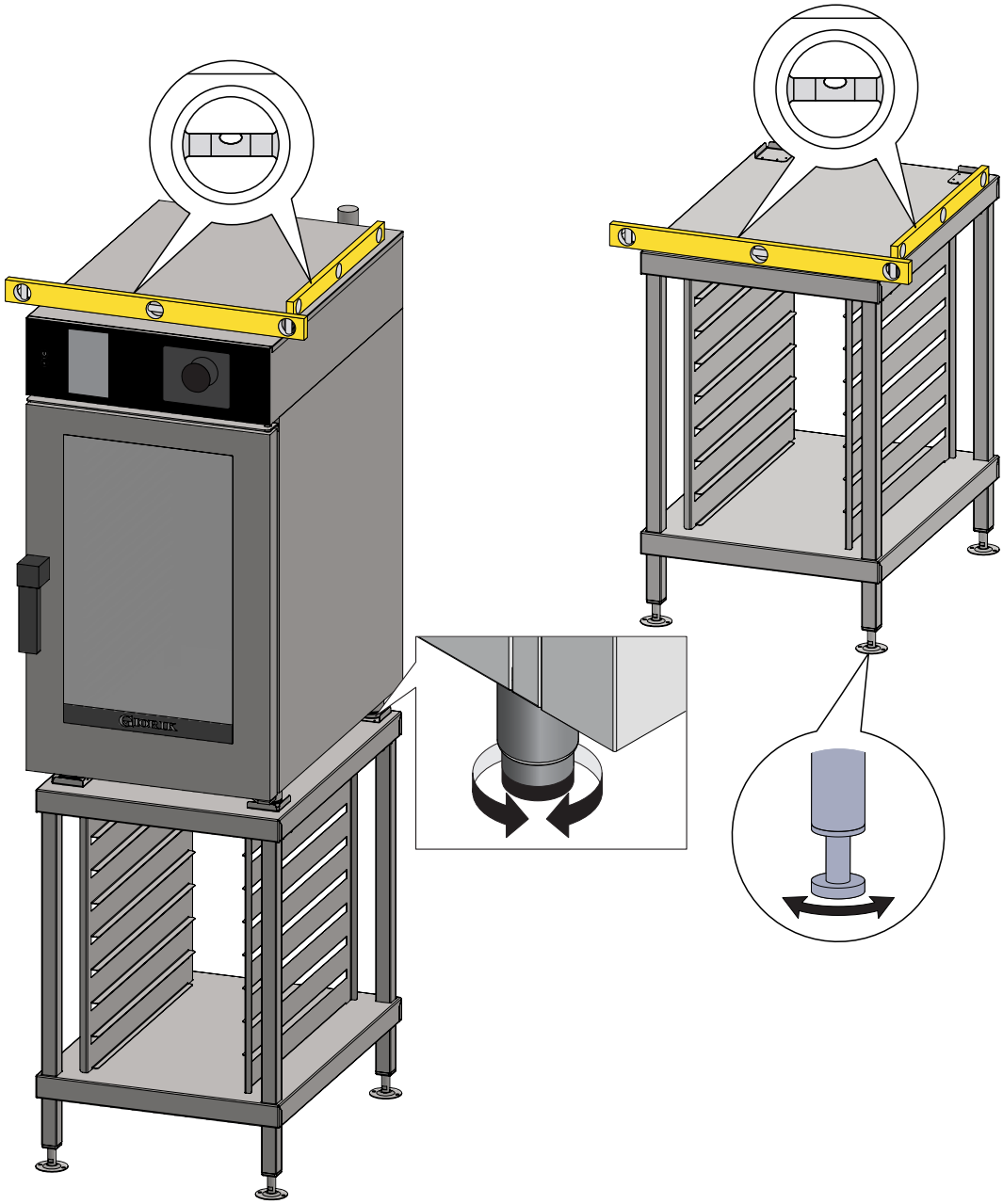

2.3 Electrical Connection

2.3.1 Information

	WARNING
	This unit must be installed in accordance with local electrical regulations/requirements. **Some procedures in this manual require the power to the equipment to be turned off and isolated. Turn the power OFF at the power point and unplug the power supply lead by the plug body. If the power point is not readily accessible turn the equipment off at the isolation switch or the circuit breaker in the switchboard. Attach a yellow "CAUTION-DO NOT OPERATE" tag. This must be performed where relevant unless the procedures specify otherwise.** **FAILURE TO DO SO MAY RESULT IN ELECTRIC SHOCK.**

Single Phase Units:

- A terminal block for on-site connection, by a licensed electrician located inside the service compartment of the unit, indicated as:
  - 1Ø + N + E
- Supplied and fitted with an appropriately rated plug and lead

Three Phase Units:

- A terminal block for on-site connection, by a licensed electrician located inside the service compartment of the unit, indicated as:
  - 3Ø + N + E

Notes:

- If the supply cord is damaged, it must be replaced by the manufacturer, its service agent or similarly qualified persons in order to avoid a hazard. Please contact Stoddart for parts and we will advise how to do this in order to avoid any electrical hazard
- The power cable should be dry and/or isolated from moisture or water

Due to continuous product research and development,
the information contained herein is subject to change without notice.

2.3.2 Wiring

1. Remove service compartment cover
2. Connect electrical wiring, following the below wiring diagram.
   After connecting wires, use a multimeter to check:
   - There is no electrical dispersion between the phases and the earth
   - For electrical continuity between the external casing and the mains earth
3. Reinstall service compartment cover
4. Secure wiring cable by fastening the cable gland nut

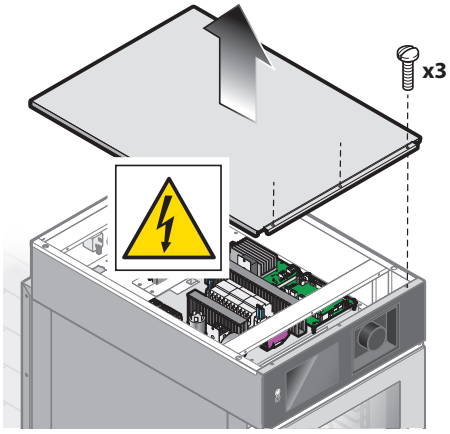

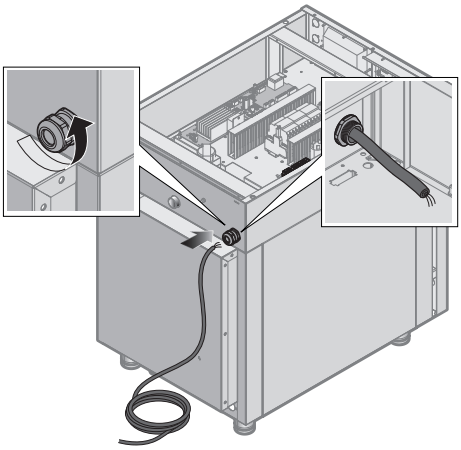

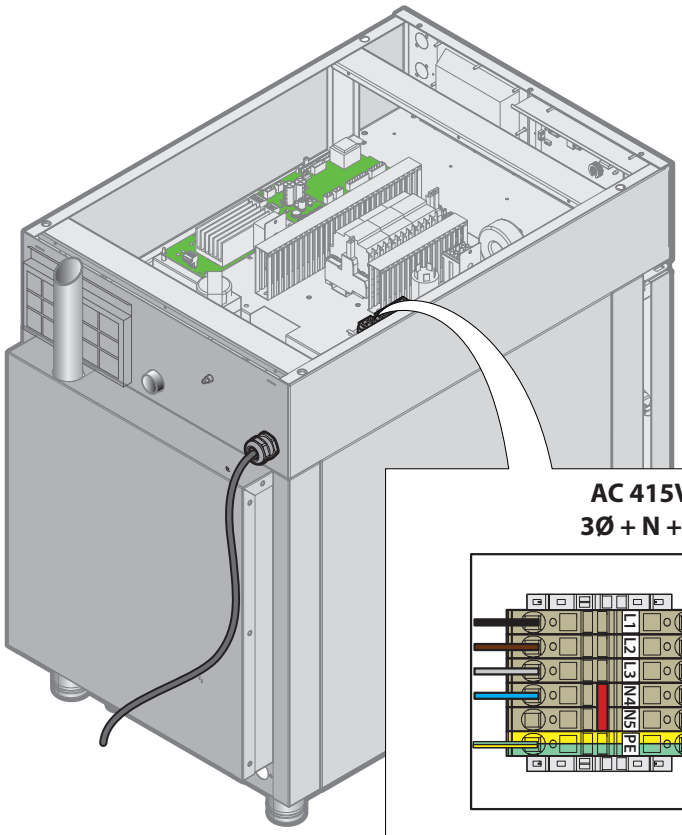

AC 415V
3Ø + N + E

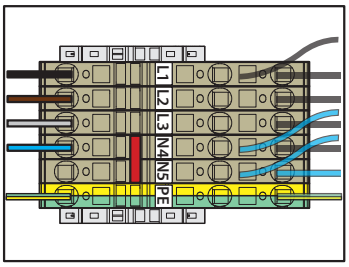

AC 230V
1Ø + N + E

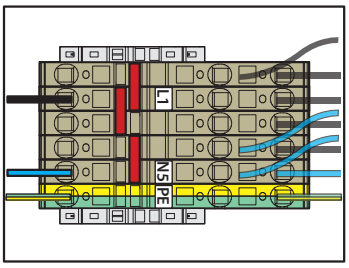

The links provided must be in this configuration for single phase.
Fan rotation does not need to be checked

Electric Model	KM0623WT	KM061WT	KM101WT
Weight	77 kg	92 kg	110 kg
Power (kW)	3Ø + N + E 415VAC / 50Hz / 5.1kW OR 1Ø + N + E 240VAC / 50Hz / 5.1kW	3Ø + N + E 415VAC / 50Hz / 7.45kW OR 1Ø + N + E 240VAC / 50Hz / 7.45kW	3Ø + N + E 415VAC / 50Hz / 14.9kW

Due to continuous product research and development,
the information contained herein is subject to change without notice.

Page Intentionally Left Blank

Due to continuous product research and development,
the information contained herein is subject to change without notice.

2.4 Water Connection

IMPORTANT

Selection of the correct water filtration system to suit local water conditions is CRITICAL. Failure to install the correct system according to the following guidelines will void warranty.

2.4.1 Chloride Test

1. Remove Titrator from bottle and replace bottle cap immediately
2. Insert lower end of the Titrator into water to be tested (approx 20mm of water). DO NOT allow water to touch yellow completion band at top of Titrator
3. Allow water to completely saturate the wick of Titrator. Reaction is complete when yellow band turns dark
4. Note where the white chloride peak falls on the scale. This represents the unit value
5. Refer to the table to convert the Titrator units into salt concentration

   * Readings greater than 1.4 (32PPM) require a Reverse Osmosis Unit to be installed

   * Readings less than 1.4 (32PPM) require the Total dissolved solids (TDS) be tested

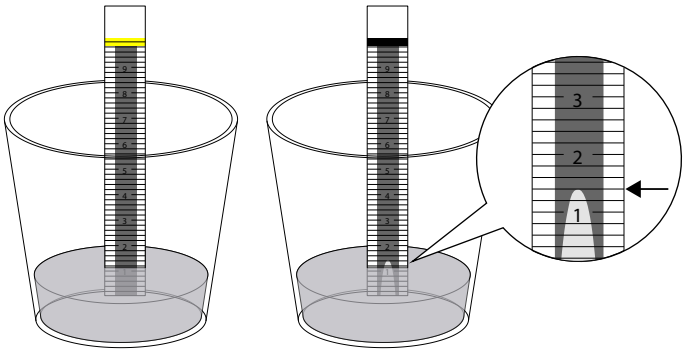

Limit*

Units	%NaCl	ppm(mg/L) Cl	Units	%NaCl	ppm(mg/L) Cl
1.4	0.005	32	4.6	0.032	196
1.6	0.006	39	4.8	0.035	212
1.8	0.007	45	5.0	0.038	229
2.0	0.009	53	5.2	0.041	248
2.2	0.010	60	5.4	0.044	267
2.4	0.011	68	5.6	0.048	288
2.6	0.013	77	5.8	0.051	311
2.8	0.014	86	6.0	0.055	335
3.0	0.016	95	6.2	0.060	361
3.2	0.017	106	6.4	0.064	389
3.4	0.019	116	6.6	0.069	419
3.6	0.021	128	6.8	0.074	452
3.8	0.023	140	7.0	0.080	487
4.0	0.025	152	7.2	0.087	525
4.2	0.027	166	7.4	0.093	567
4.4	0.030	180	7.6	0.101	613

2.4.2 Total Dissolved Solids (TDS) Test

1. Remove the cover from the TDS meter, turn on by pressing the On/Off button. The display should read 000
2. Insert lower end of the TDS meter into water to be tested (approx 20mm of water). DO NOT completely submerge
3. Wait 5-10 seconds
4. The number displayed on meter is the TDS (Total Dissolved Solids) of the water expressed in PPM (parts per million) e.g. TDS = 70PPM

   • Contact Stoddart if reading is lower than 20ppm

5. When finished, turn the TDS meter off

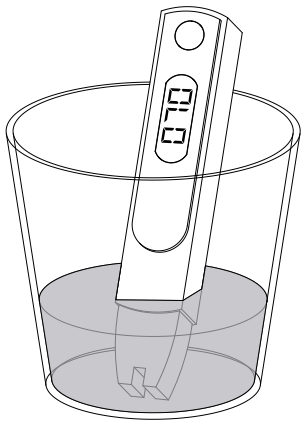

2.4.3 Filtration System

- After testing the water supply quality, use the below chart to determine the water filter requirements
- Only Stoddart supplied filter systems can be used

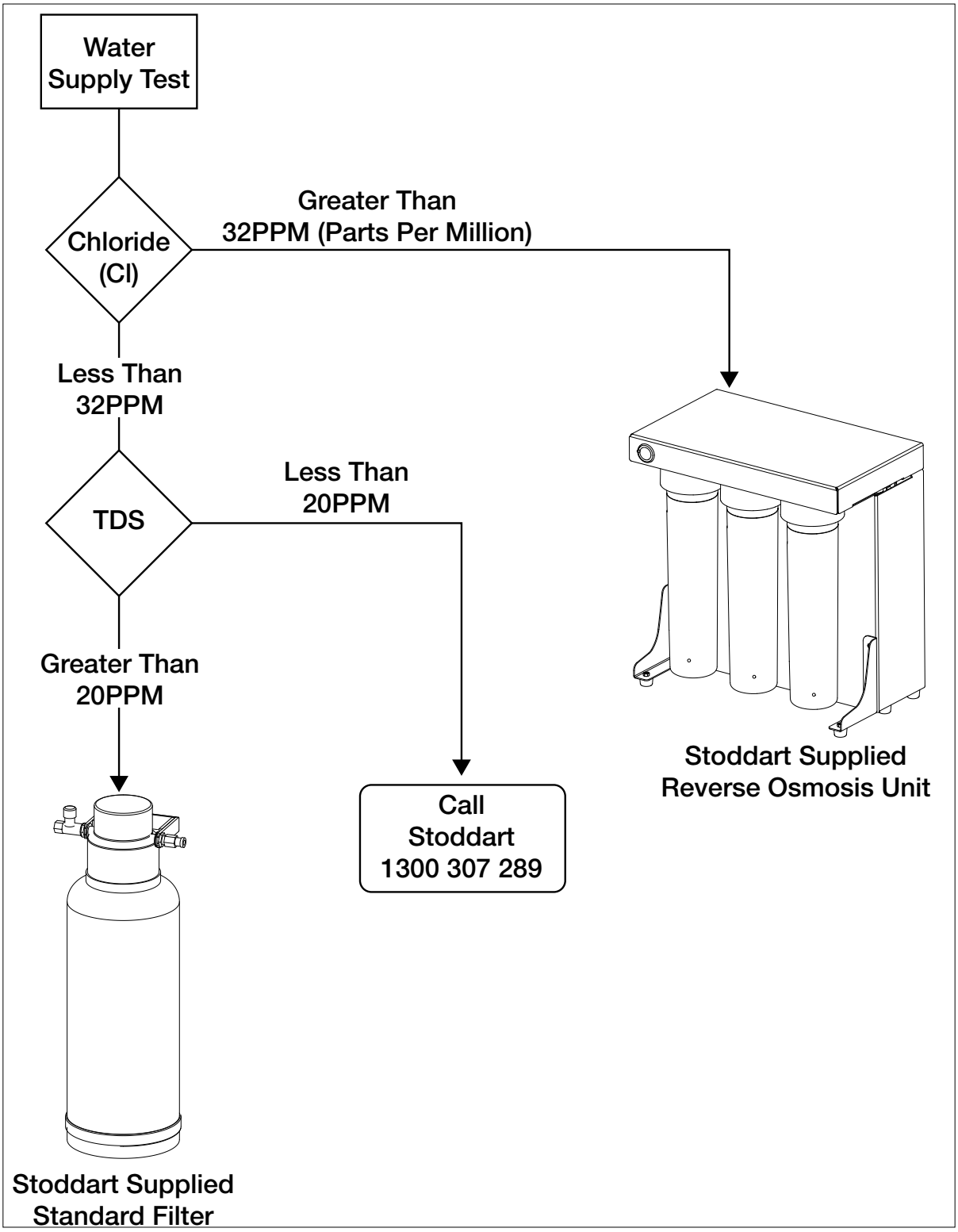

Due to continuous product research and development,
the information contained herein is subject to change without notice.

2.5.4 Water Connection - Reverse Osmosis

IMPORTANT

This oven must be installed in accordance with the Plumbing Code of Australia (PCA)
The Oven must be installed with the supplied Dual Check Valve, Water Filter and Pressure Limiting Valves

Water Connection	3/4" BSP
Water Inlet Pressure	300 - 350KPA If the incoming water pressure is below the specified minimum (150 kPa), install a pump (minimum flow rate: 300 l/h); if it is above the specified maximum (300 kPa), install a pressure limiting valve
Tempered water supply	15°C ± 5°C
Water Hardness (CaCO3)	3°f - 9°f (30 - 90ppm; 1.5-5°d)
PH	7.0 - 8.5
TDS	40 - 150mg/L
Langelier index	> 0.5

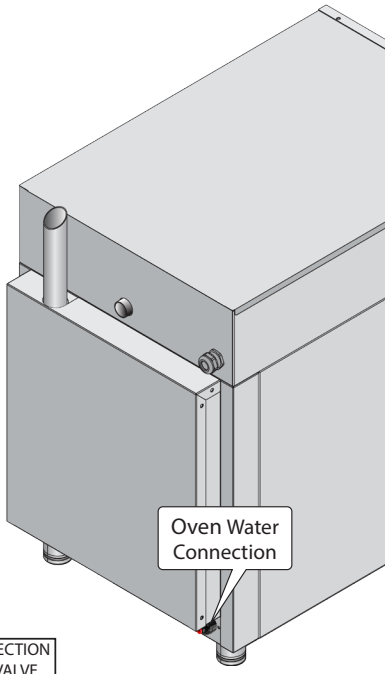

Item	Description	Supplied with Oven	Supplied with RO Kit	Total Qty.
A	Pressure Limiting / Dual Check Valve 500 Kpa	---	1	**1**
B	3/4" Bsp To 3/8" Tube Connector	---	3	**3**
C	3/8 Tube 'Water' (to be cut to length)	3m	3m	**6m**
D	1/4 Tube 'Drain' (to be cut to length)	---	2m	**1**
E	3/8" Three Way Manifold	2	2	**4**
F	3/8" Three Way Manifold (For filter flushing)	---	1	**2**
G	Locking Clip	12	12	**24**
H	Reverse Osmosis (RO) System	---	1	**1**
I	Ball Valve - Water Storage Tank		1	**1**
J	Water Storage Tank	1	---	**1**

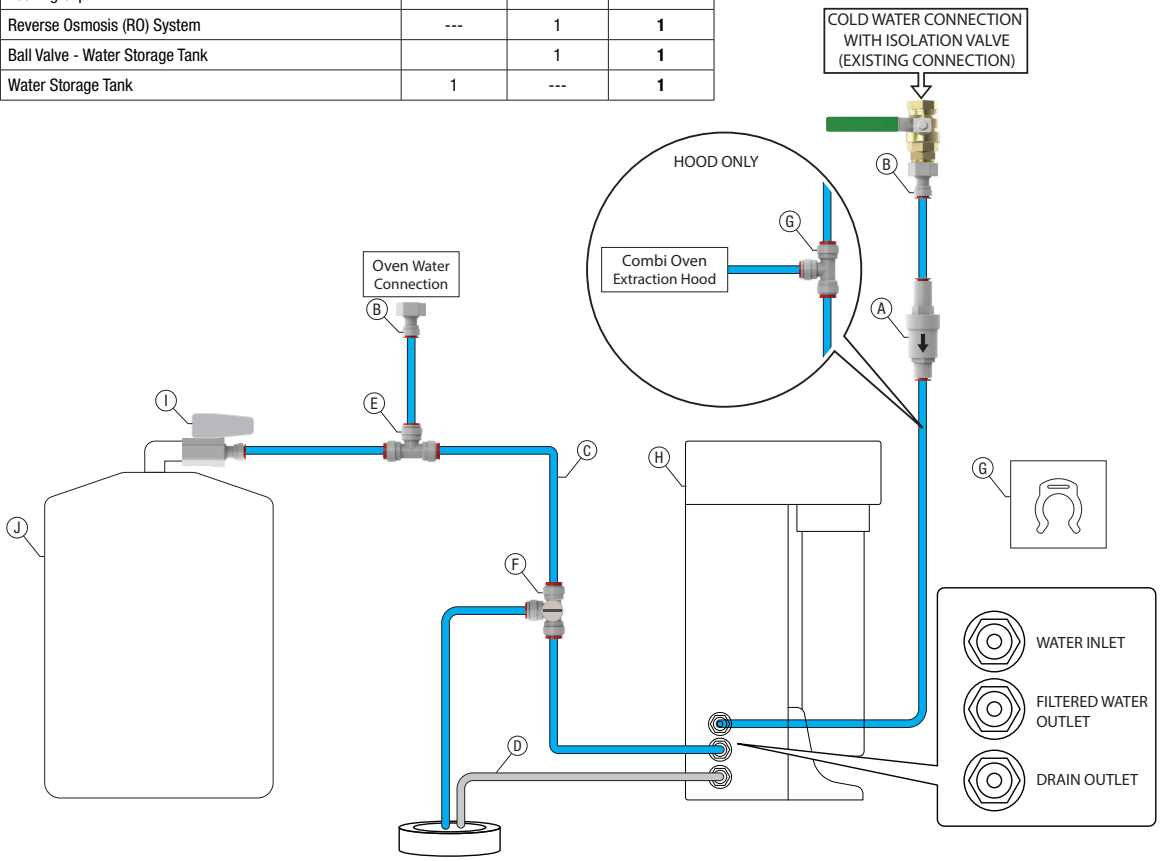

2.5.5 Water Connection - Standard Filter

IMPORTANT

This oven must be installed in accordance with the Plumbing Code of Australia (PCA)
The Oven must be installed with the supplied Dual Check Valve, Water Filter and Pressure Limiting Valves

Water Connection	3/4" BSP
Water Inlet Pressure	300 - 350KPA If the incoming water pressure is below the specified minimum (150 kPa), install a pump (minimum flow rate: 300 l/h); if it is above the specified maximum (300 kPa), install a pressure limiting valve
Tempered water supply	15°C ± 5°C
Water Hardness (CaCO3)	3°f - 9°f (30 - 90ppm; 1.5-5°d)
PH	7.0 - 8.5
TDS	40 - 150mg/L
Langelier index	> 0.5

Item	Description	Supplied with Oven	Supplied with SF Kit	Total Qty.
A	Pressure Limiting / Dual Check Valve 350 Kpa	---	1	**1**
B	3/4" Bsp To 3/8" Tube Connector	1	3	**4**
C	3/8" Quick connect adapter	---	2	**2**
D	3/8 Tube (Water) (to be cut to length)	3m	2m	**5m**
E	Locking Clip	12	12	**24**
F	3/8" Three Way Manifold (spare)	2	---	
G	Flush Valve	---	1	
H	Standard Filter System	---	1	**1**

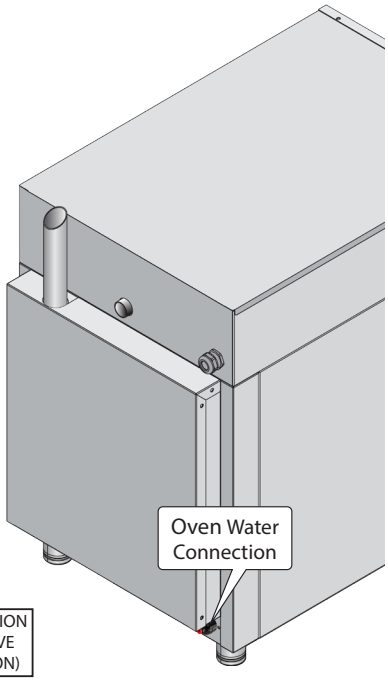

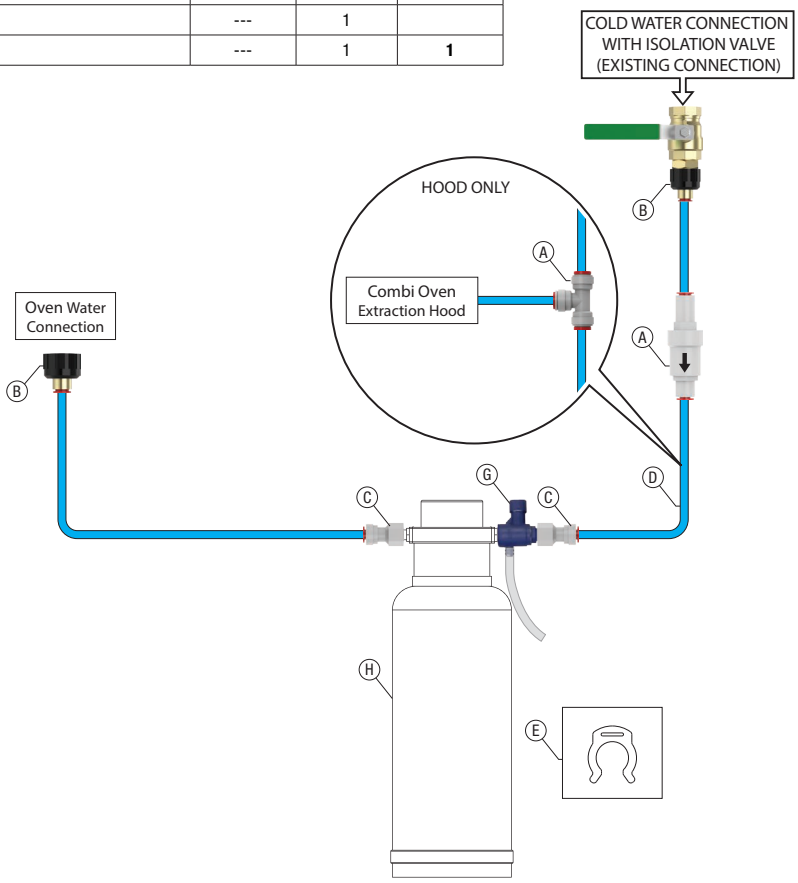

Due to continuous product research and development,
the information contained herein is subject to change without notice.

2.5 Drainage Connection

- 40mm Ø drain kit is supplied with oven as illustrated. Any modification or extension to the kit must be able to resist temperatures up to 100°C
- Drain pipes must be directed to the tundish (Drain Kit Supplied). Drain pipe must sit 25mm above the tundish
- Secure drain pipe to the Combi oven outlet located on the back bottom left of the unit

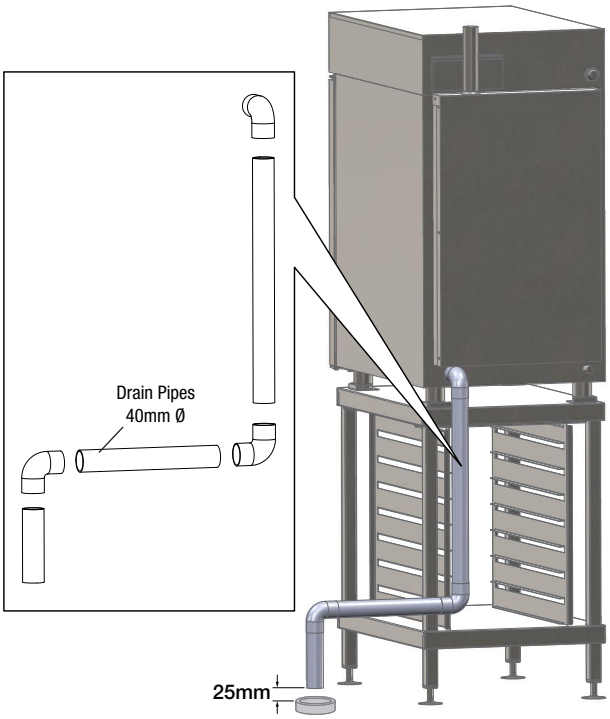

2.6 Liquid Detergent Connection

IMPORTANT

Only Stoddart provided oven cleaners should be used. Other products may lead to voidance of warranty!

Detergent line located on the underside of the oven

- If using the optional Stoddart bottle holder, place the holder on the outside of the grid rack
- Remove the bottle cap from the liquid detergent
- Drill a 8mm hole in the centre of the cap
- Feed the detergent line through the bottle cap
- Attach the weight to the detergent line
- Place the line and weight back into the bottle and secure bottle cap
- Cleaning products must not exceed 10% Sodium Hydroxide. Exceeding 10% Sodium Hydroxide will void warranty
- Wear appropriate PPE

2.7 Optional Hand Shower with Magnetic Holder

- Position the magnetic hand shower holder over the top edge of the oven, in a convenient location
- Connect an appropriate unfiltered water source with an isolation valve
- A spare outlet exists on the stoddart supplied 4 way manifold see page 17

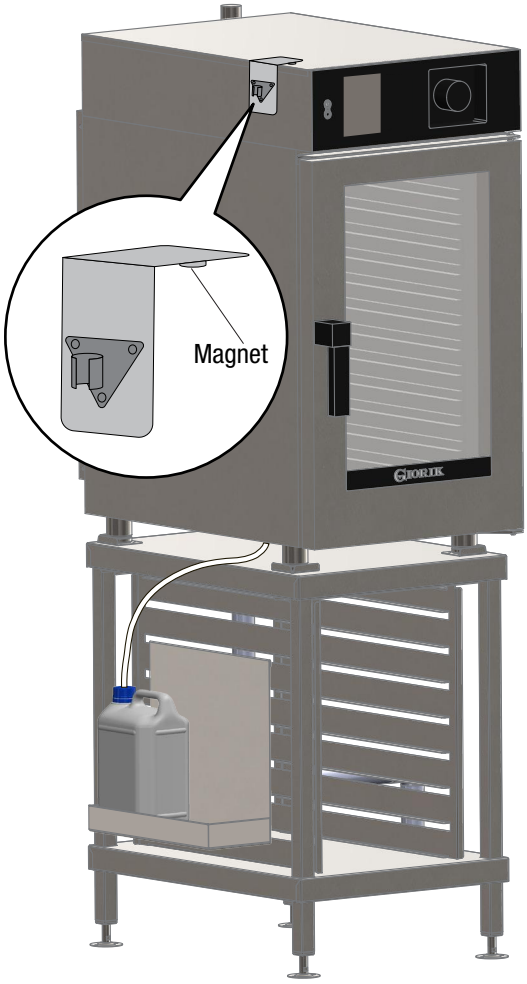

Due to continuous product research and development,
the information contained herein is subject to change without notice.

2.8 Oven Testing

The oven should be tested by completing a cooking cycle to verify that the equipment works properly, without any anomalies or problems.

Turn on the oven (See page 22)
Set a cooking cycle with temperature to 150°C, time set to 10min and humidity to 25% (See “Manual Cooking” page 26).
Press “Start/Stop”.

Carefully check the points given in the following list:

- Press the “LED Door Light” icon (See page 22), the LED door lights illuminate the oven chamber, press again to turn off
- The oven will stop if the door is opened and starts to work when the door is closed
- The thermostat that regulates the temperature in the cooking chamber is triggered when the set temperature is reached and the heating element is shut off temporarily
- The fan motor reverses the direction of rotation automatically; reversal takes place every 3minutes (time varies depending on the cooking time)
- For the ovens with two fans in the cooking chamber, the motors have the same direction of rotation
- At the end of the cooking cycle the oven emits an audible warning

3.1 Technical Drawing

3.1.1 KM0623WT

Specifications

Model	KM0623WT
W x D x H (mm)	519 x 690 x 792
Weight	77kg
Capacity	6 X 2/3GN
Power	3Ø + N + E 415VAC / 50Hz / 5.1kW OR 1Ø + N + E 240VAC / 50Hz / 5.1kW
Waste Connection	40mm
Cold Water Connection	3/4 BSP 300-350 kpa Min 10°C Max 30°C

Legend

A	Electrical connection
B	Filtered water inlet (3/4" BSP)
C	Drain connection
D	Humidity vent
E	Detergent line inlet

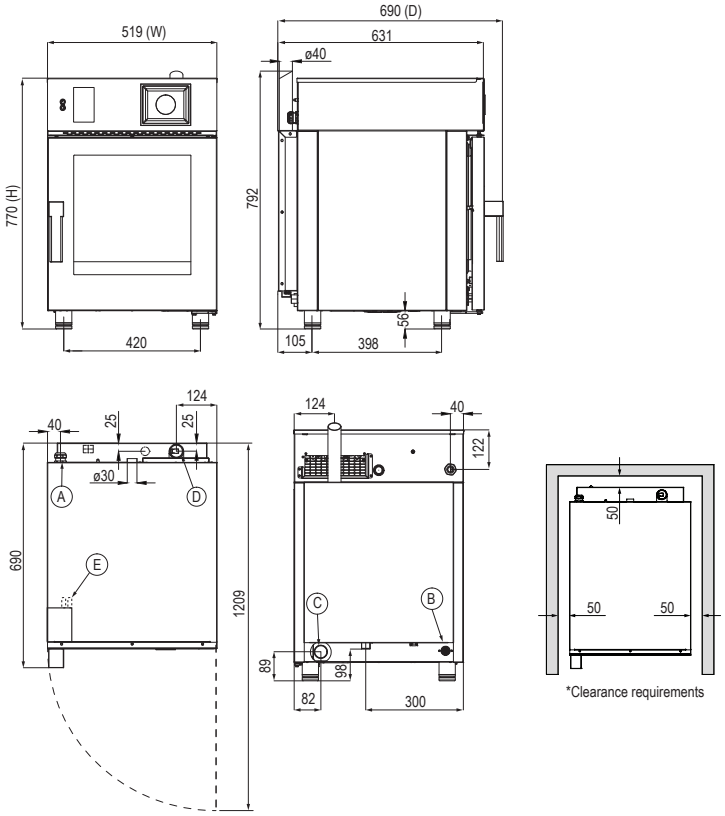

3.1.2 KM061WT

Specifications

Model	KM061WT
W x D x H (mm)	519 x 865 x 792
Weight	92kg
Capacity	6 X 1/1GN
Power	3Ø + N + E 415VAC / 50Hz / 7.45kW OR 1Ø + N + E 240VAC / 50Hz / 7.45kW
Waste Connection	40mm
Cold Water Connection	3/4 BSP 300-350 kpa Min 10°C Max 30°C

Legend

A	Electrical connection
B	Filtered water inlet (3/4" BSP)
C	Drain connection
D	Humidity vent
E	Detergent line inlet

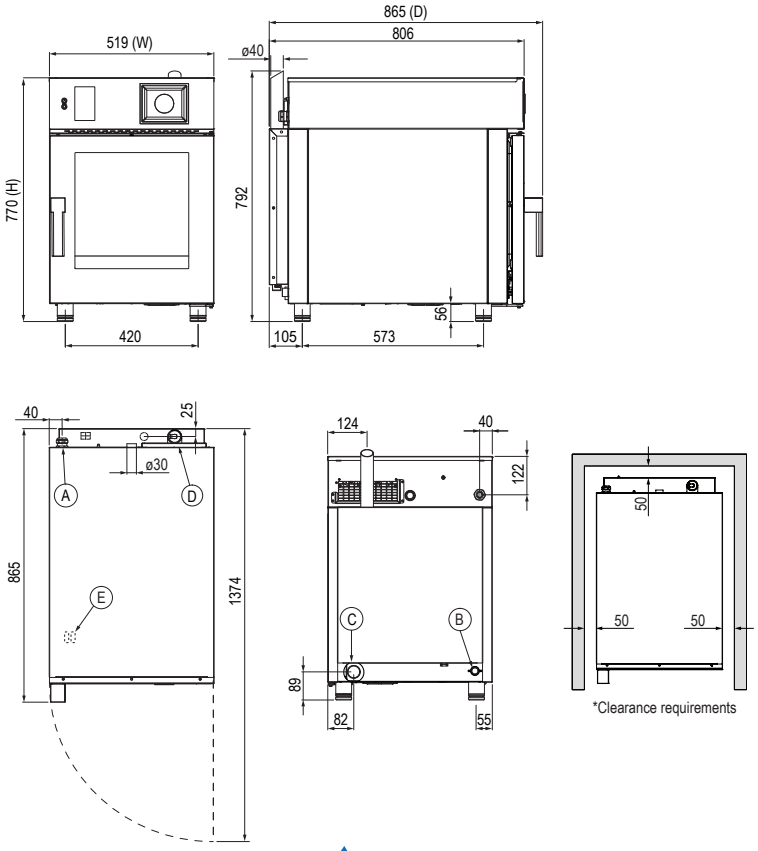

Due to continuous product research and development,
the information contained herein is subject to change without notice.

3.1.3 KM101WT

Specifications

Model	KM101WT
W x D x H (mm)	519 x 865 x 1032
Weight	110kg
Capacity	10 X 1/1GN
Power	3Ø + N + E 415VAC / 50Hz / 14.9kW
Waste Connection	40mm
Cold Water Connection	3/4 BSP 300-350 kpa Min 10°C Max 30°C

Legend

A	Electrical connection
B	Filtered water inlet (3/4" BSP)
C	Drain connection
D	Humidity vent
E	Detergent line inlet

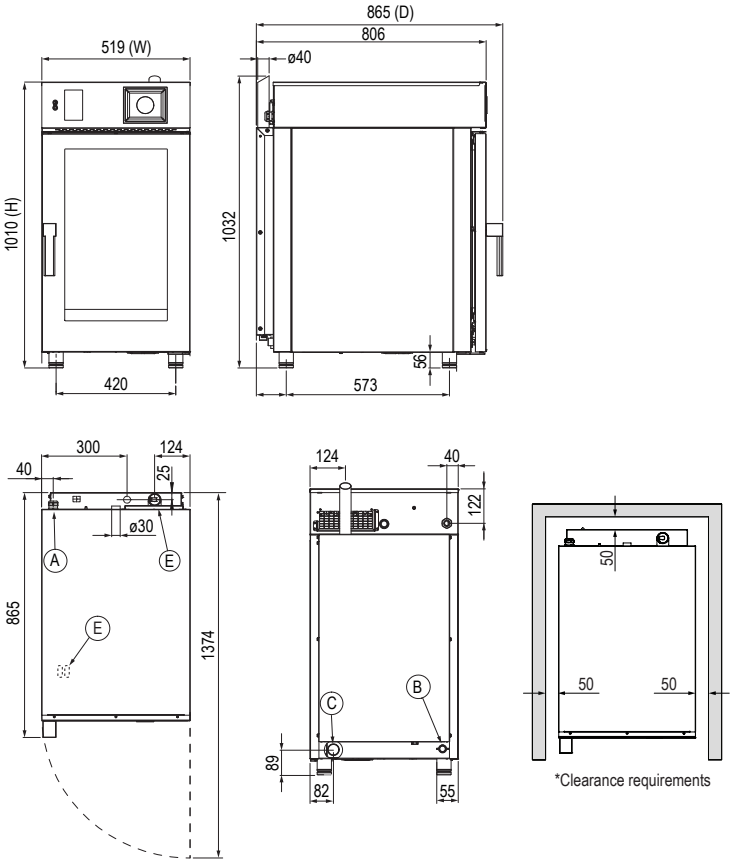

4.1 General Overview

4.1.1 Control Interface

A. Start-up and Shutdown: Press the top section of the switch to turn the oven on, Press the bottom section of the switch to turn the oven off
B. Touch Screen: The operating parameters of the appliance are set and displayed on this screen
C. Navigation Dial: The dial is used to set the values on the screen. If the dial is pressed, the value entered is confirmed
D. One Touch: User preffered recipes, for quick access
E. Settings: Access service menu, select wash cycle, chamber cooling
F. Chamber Light: Turns the oven chamber light on/off
G. Recipe Book: Default and saved recipes
H. Manual Cooking: Recipe settings are entered manually

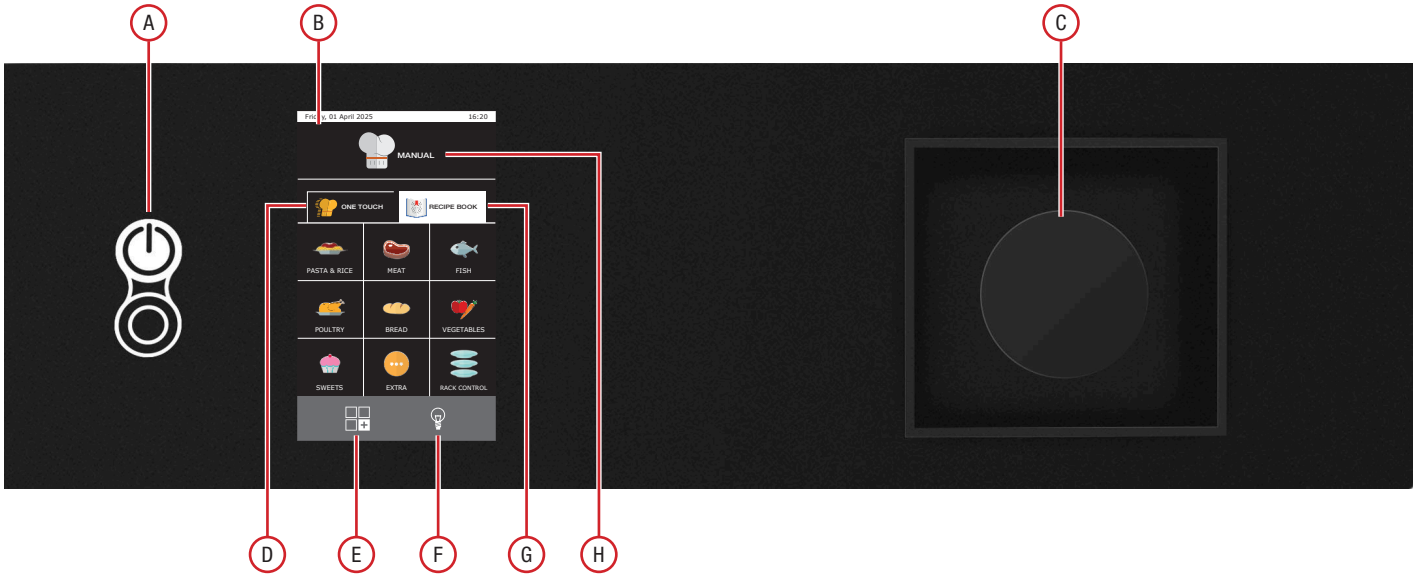

4.1.2 Cooking Screen Icons:

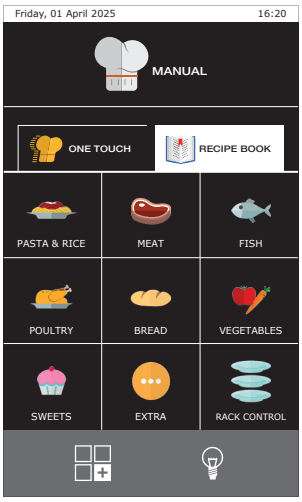

Home:
- Return to home screen

Settings menu:
- Save or modify a recipe
- Select and start a wash cycle
- Cool off the chamber;
- Access settings (e.g. language, time, etc.)

Delayed start:
- Set a delayed start

Chamber Light:
- Switch the light in the chamber on/off

Return:
- Return to the previous screen

Due to continuous product research and development,
the information contained herein is subject to change without notice.

4.1.3 Cooking Methods

To cook varying types of food to perfection, a sequence of different cooking methods should be used.

Cooking Method	Temperature Range	Humidity Input	Humidity Extraction	Uses
Convection Cooking: Convection cooking uses the dry heat of the heating elements that the fans spread at a variable speed to ensure quick and even cooking.	50°C to 300°C	Manual input: By pressing and holding the humidity icon during the cooking cycle	Manual	Dry confectionery cooking Frozen food cooking External browning of foods Food grilling
Combi Cooking: Food is cooked with a humidity percentage set by the user. Ventilation inside the cooking chamber ensures quick and even cooking.	50°C to 270°C	Input: 0% to 100%	Automatic	Cooking of the dishes that must remain soft inside (e.g. Poultry) Leavening
Steam Cooking: Food is cooked using steam, which is evenly spread by the fans at a variable speed.	50°C to 120°C	100% fixed humidity (Cannot be adjusted)	Flue vent always closed	Vacuum cooking (sous-vide) Cooking of delicate dishes Cooking of creams and sauces Pasteurisation Regeneration Leavening
Smoking It allows the user to set a type of cooking suitable for using a smoking device (optional, contact the Stoddart sales department).	10°C to 200°C	No Input (Humidity cannot be added)	Manual	Meat cooking
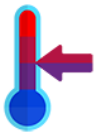 **Keep Warm:** Keeps the temperature of the cooked food constant for a set or indefinite time	50°C to 120°C	Input: 0% to 100%	Automatic	Keeping cooked food warm

4.2 Setup - Configuration Menu

4.2.1 Date and Time / Language

Before commencing cooking, the initial setup needs to be entered, such as Time/Date and Language.

A. Press “Settings”
B. Press “Service”
C. Press “Configuration”
D. Select “Date and Time” from the configuration menu
E. Select and adjust each of the parameters accordingly
F. Press “SAVE” to confirm the settings

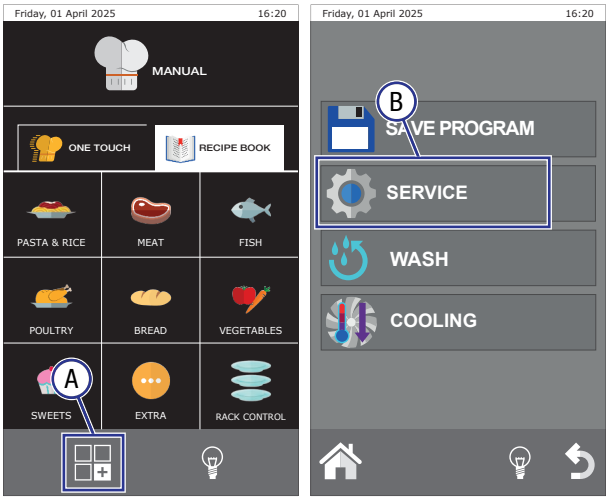

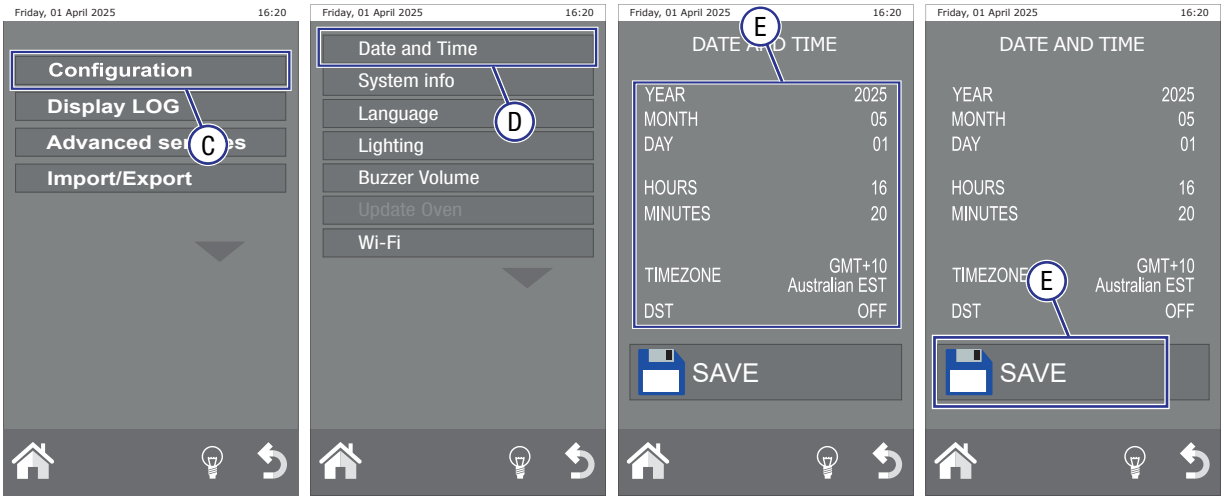

4.2.2 System Info

This function allows the display of the software version installed in the oven and the serial number of the oven.

A. Press “Settings”
B. Press “Service”
C. Press “Configuration”
D. Select “Date and Time” from the configuration menu
E. Select and adjust each of the parameters accordingly
F. Press “SAVE” to confirm the settings

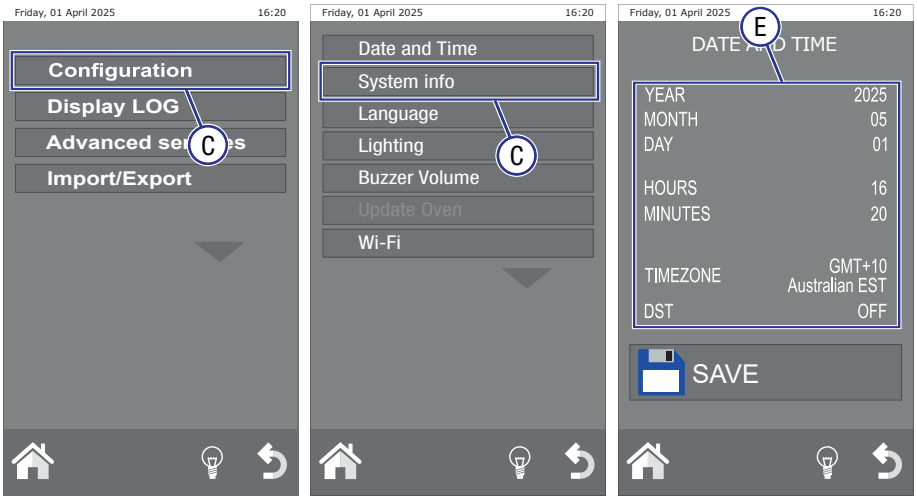

Due to continuous product research and development,
the information contained herein is subject to change without notice.

4.2.3 Language

This function allows the user to select the preferred language for the oven.
To access the language selection:

A. Enter the “Configuration” menu
B. Press “Language”
C. Select the preferred language i.e. English

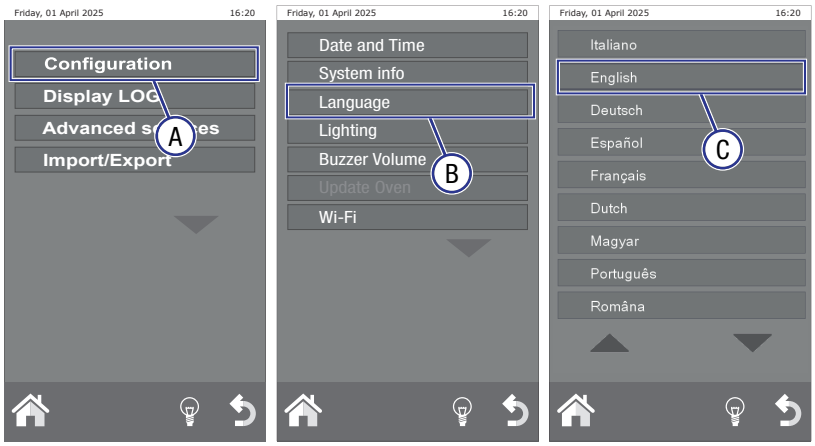

4.2.4 Display Brightness

Display brightness can be adjusted to suit the users preference.
To access Display Brightness:

A. Enter the “Configuration” menu
B. Select “Lighting”
C. Slide the white bar to adjust the brightness
D. Press “Save” to confirm

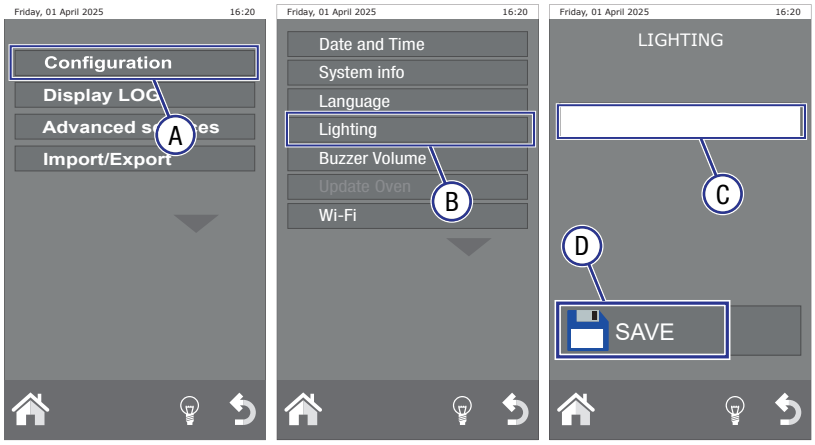

4.2.5 Buzzer Volume

Buzzer Volume can be adjusted to suit the users preference.
To access Buzzer Volume:

A. Enter the “Configuration” menu
B. Select “Buzzer Volume”
C. Slide the white bar to adjust the Buzzer Volume
D. Press “Save” to confirm

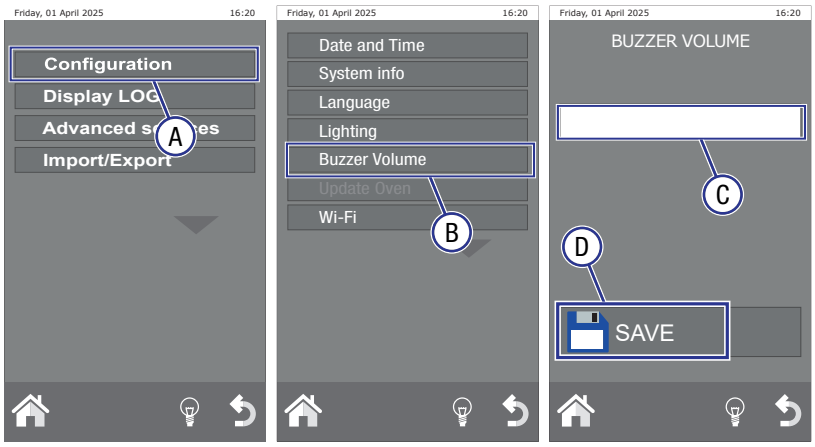

4.3 Manual Cooking

4.3.1 Initial Settings

It is possible and easy to create customised cooking programs that can have up to 9 different phases plus pre-heating.
Every cooking phase is represented by a cooking mode (convection, mixed, steam, etc.) with specific time, humidity, ventilation parameters, etc. For example: for a roast dish, a program can be created that contains a browning phase, a cooking phase and a hold phase.

Set the cooking parameters for one or more cooking phases. Once these settings are saved, a recipe can be started without saving (the entered parameters are not saved) or start a recipe after saving it (for future use).

Manual cooking cycles require the following actions:

- Setting a manual pre-heating function (optional)
- PHASE 1 parameter settings
- Selecting the cooking method: convection / steam / combi
- Setting the temperature in the chamber
- Setting the duration of the cooking cycle (by setting the time or using a core probe)
- Setting fan speed
- Humidity input/extraction (depending on the cooking cycle chosen)
- Setting additional cooking phases (optional)
- Saving the recipe (optional)
- Starting a recipe

4.3.2 Selecting The Cooking Method

Select the cooking method required, by touching the relative icon (convection cooking mode in the example).

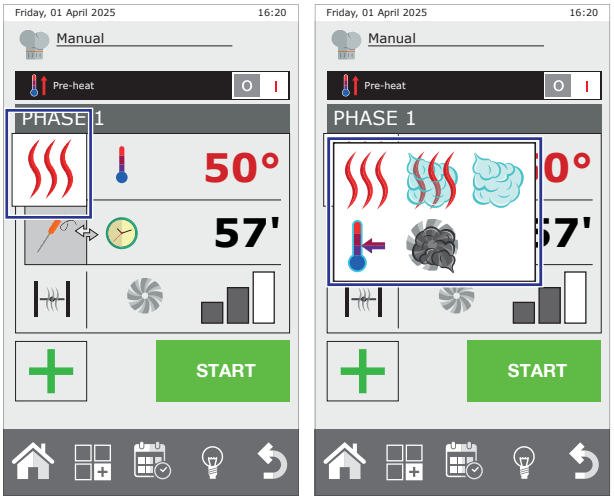

Due to continuous product research and development,
the information contained herein is subject to change without notice.

4.3.3 Selecting The Temperature

Choosing the correct cooking temperature is essential to achieve optimal results. To set the temperature:

A. Touch the “temperature” field
B. Turn the navigation dial to select the desired temperature
C. Press the navigation dial to save the set value

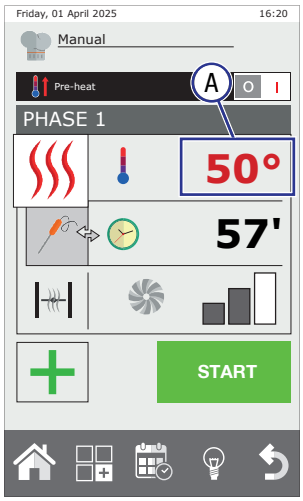

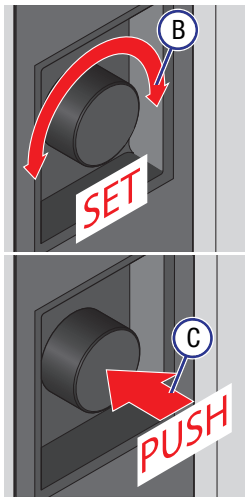

4.3.4 Setting Preheating

The preheating function is recommended for achieving optimal cooking results. This function can be toggled on or off by moving the 0/I cursor to the top right. Cursor on:

“0”: phase 1 starts immediately skipping the preheating stage.
“I”: preheating is enabled. The oven manages the temperature automatically based on the temperature you have set for phase

As soon as this temperature is reached, the oven emits an audible beeping and a window opens to indicate that the oven is ready to load. When the door is closed, phase 1 automatically starts according to the set parameters.

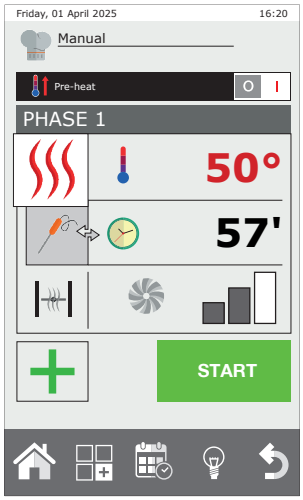

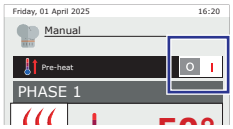

preheat off

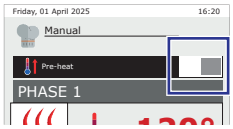

preheat on

4.3.5 Time Setting:

- Time setting:
  The cooking cycle stops automatically when the set time expires (range: from 1 minute to 40 hours)

To set the time duration:

A. Select “Time”
B. Touch the value field to set the cooking time
C. Turn the navigation dial to adjust the temperature value
D. Press the navigation dial to save the set value

Note: For the oven to run continuously, touch the time field and turn the navigation dial to the left until the display shows INF (time = Infinity).

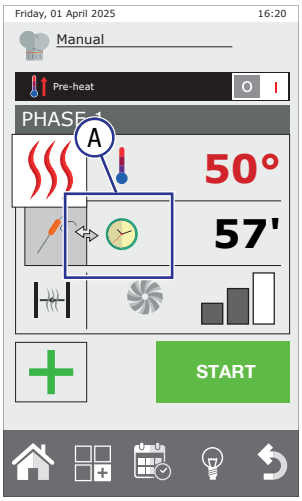

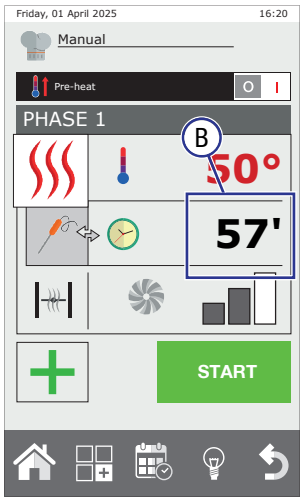

4.3.6 Core Probe:

- Core probe:
  the cooking cycle stops automatically when the temperature measured by the probe inside the food reaches the set value

To set the Core Probe temperature:

A. Connect the core probe to the oven
B. Select Core probe
C. Touch the value field to set the core probe temperature
D. Turn the navigation dial to adjust the temperature value
E. Press the navigation dial to save the set value

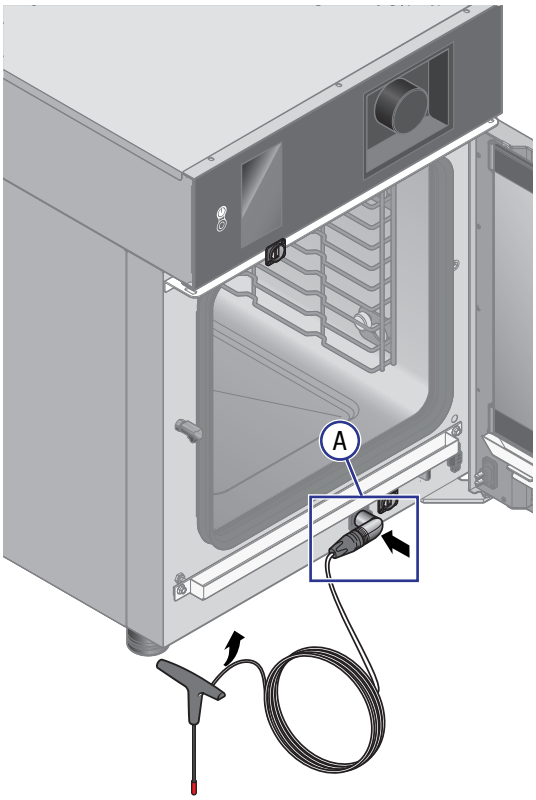

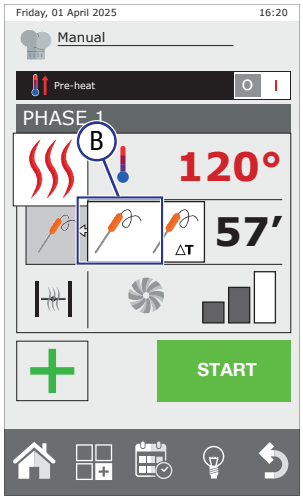

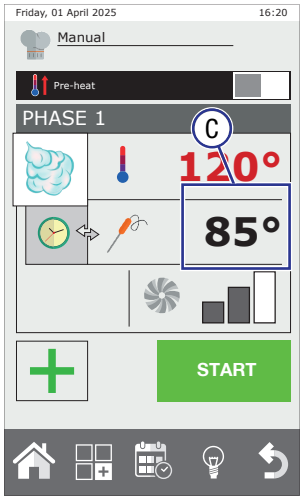

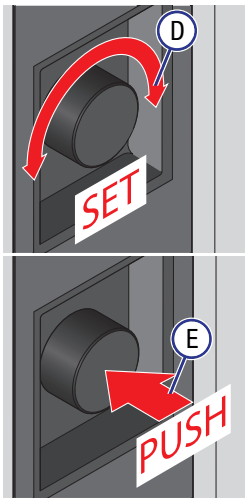

Note: When not in use, place the probe back into the magnetic support.
At the end of the cooking cycle, take care to remove the probe from the core before taking the tray out of the oven. The core probe is very sharp and it reaches high temperatures after cooking, do not pull the probe by the connection wire to remove it.
Do not insert the hot probe in frozen food to prevent thermal shock to the probe, which can cause the probe to become damaged.

Dishes	Recommended Core Temperature
Beef tenderloin	53-58°C
Beef (ribs, entrecote, steaks)	from 50 °C to 55 °C: rare from 55 °C to 65 °C: medium from 66 °C to 70 °C: well done
Pork fillet	58-64°C
Roast veal	72-75°C

Dishes	Recommended Core Temperature
Porchetta (pork roast)	68-75°C
Lamb sirloin	58-65°C
Chicken - turkey (whole)	85-87°C
Salmon (fillets)	58-65°C
Shin of pork/ribs	80-85°C

Due to continuous product research and development,
the information contained herein is subject to change without notice.

4.3.7 Delta T(Δt):

- Delta T(Δt):
  During the cooking cycle, the oven increases or decreases the cooking chamber's temperature automatically to keep the Delta T (Δt) value constant (e.g. 30°C). These cooking cycles are perfect for cooking meat slowly and at low temperatures to keep it soft and tender without losing excessive weight.
  Delta T (Δt) = Temperature in the chamber - (minus) Probe core temperature

The Delta T(Δt) function is used mainly for slow, low temperature cooking.
In Delta T(Δt) mode, the product core temperature is set and the chamber temperature is set between 15°C - 30°C higher. As the core temperature rises, the temperature in the chamber will increase maintaining the set difference.
Note: A probe must be used for the Delta T(Δt) function.

To set the Delta T:

A. Connect the core probe to the combi oven
B. Select Core probe then press the Delta T icon
C. Touch the value fields to set the core probe temperature and chamber temperature (set the chamber tempaerature between 15°C - 30°C higher than the core probe)
D. Turn the navigation dial to adjust the temperature value
E. Press the navigation dial to save the set value

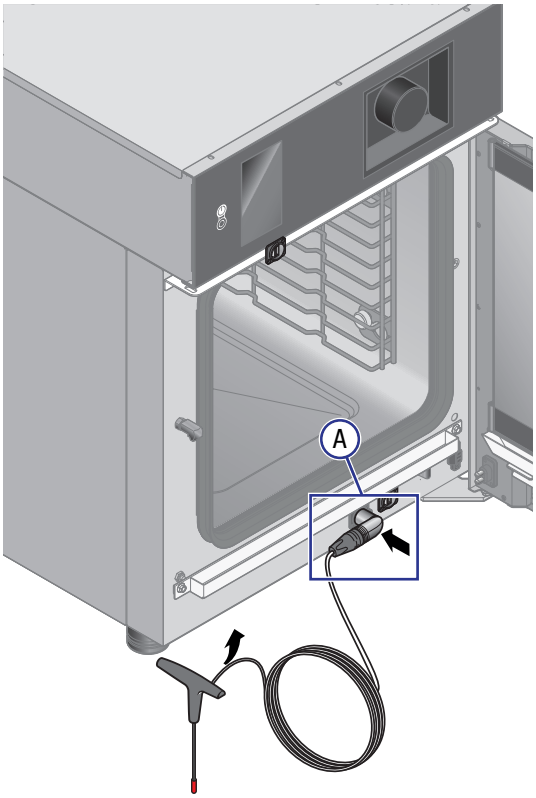

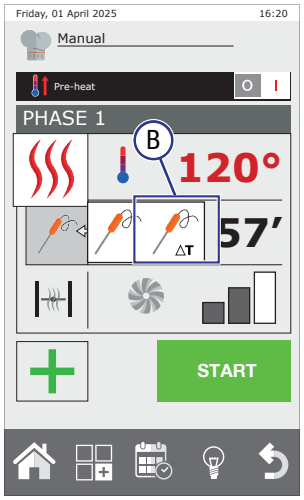

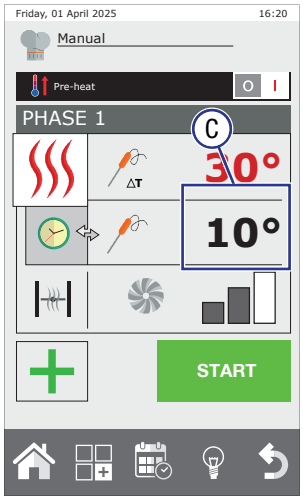

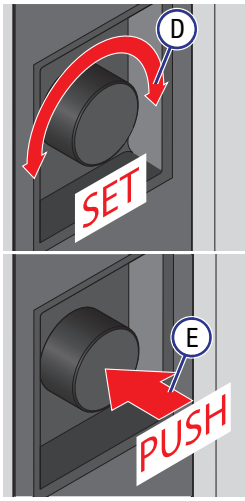

Note: When not in use, place the probe back into the magnetic support.
At the end of the cooking cycle, take care to remove the probe from the core before taking the tray out of the oven. The core probe is very sharp and it reaches high temperatures after cooking, do not pull the probe by the connection wire to remove it.
Do not insert the hot probe in frozen food to prevent thermal shock to the probe, which can cause the probe to become damaged.

4.3.8 Fan Rotation Speed

The fan rotation speed parameter can be adjusted when using "Convection" and "Combi" modes.

To set the fan speed:

A. Touch the fan field;
B. Turn the navigation dial to adjust the temperature value
C. Press the navigation dial to save the set value

Note: For best cooking results, the fans reverse the rotation direction periodically. The oven manages this phase based on the cooking time set without the need for setting anything else.

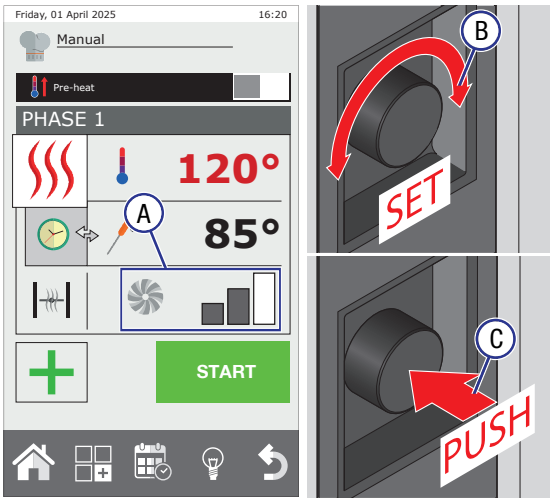

4.3.9 Manual Adjustment of Vent

Only when using convection cooking, is it possible to choose for the flue to be opened or closed. The vent has the task of maintaining or expelling moisture from the oven. When the vent is open, the higher the fan speed, the greater the evacuation of moisture from the oven chamber.

To open or close vent:

A. Set the oven to "Convection"
B. Touch the Vent field to open or close the vent

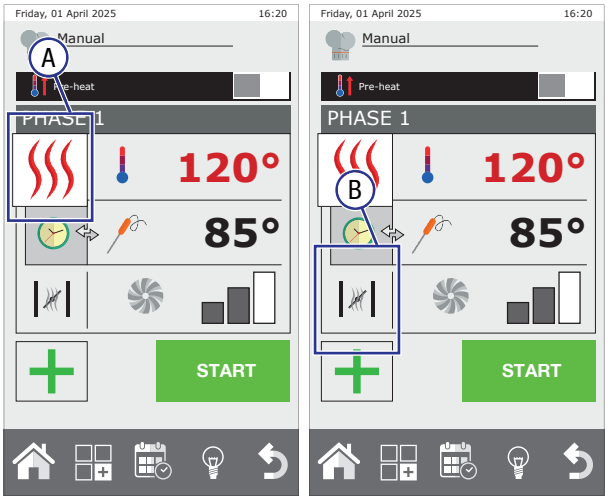

Type of cooking	Humidity input	Humidity extraction
Convection	manual input, press:	closed flue open flue

4.3.10 Humidity Percentage in Combi Mode

Only in "Combi" mode can the percentage of humidity for the oven to maintain during cooking can be set. With the patented Meteo System (humidity control), the relative humidity in the cooking chamber is measured, humidity is added or removed, to maintain the settings programmed by the operator.

To set moisture percentage:

A. Touch the Humidity field
B. Turn the navigation dial to adjust the percentage value
C. Press the navigation dial to save the set value

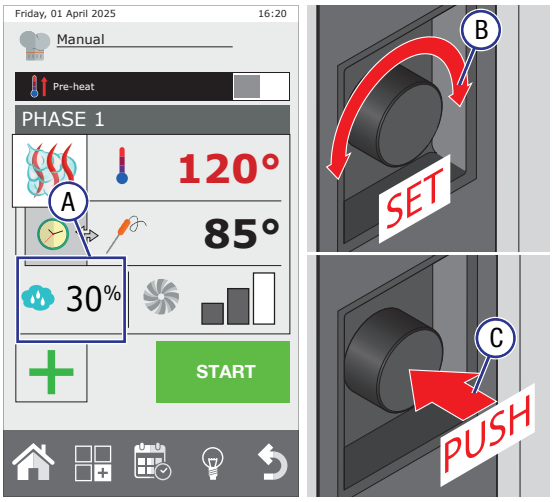

Type of cooking	Humidity input	Humidity extraction
Combi	0% adjustable from 0% to 100%	the oven opens and closes the flue vent automatically

Due to continuous product research and development,
the information contained herein is subject to change without notice.

4.3.11 Steam Phase

The steam function can be set by selecting “Steam”, with an adjustable temperature range of 50°C-120°C

The level of steam cannot be adjusted (set to 100%).

Type of cooking	Humidity (default)	Humidity extraction
Steam	100%	flue vent always closed

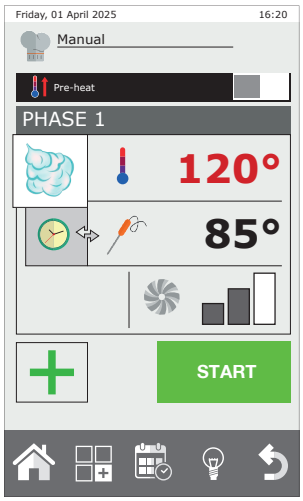

4.3.12 Holding Phase

The holding phase is usually the last phase to be set, with the purpose of maintaining the products at or above 65°C (food safe temperature) without cooking the product.

The holding phase, by default has the humidity set at 20% and the fan speed set at 1.
For effective holding, it is recommended not to adjust the fan speed. When holding roasted products, a humidity setting of 20% - 35% is recommended, in the case of brazing or stewing, a humidity setting of 90% - 100% is recommended.

To set a holding phase:

A. Select the cooking method “Holding”
B. Set the parameters (temp, time, fan speed etc.)
C. Load product into the oven, press “Start” (press “+ NEW PHASE” if extra phases is required)

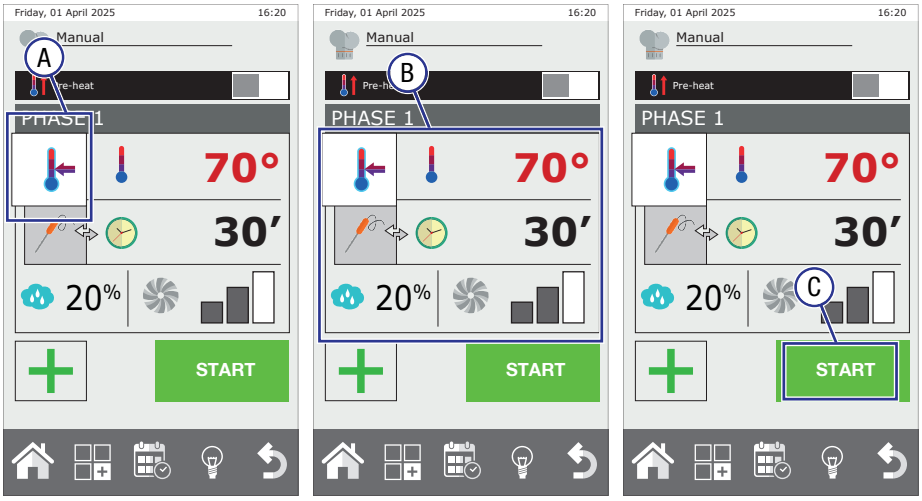

4.3.13 Setting Multiple Cooking Phases (optional)

After setting all phase 1 parameters additional cooking phases can be set if required.
Up to 9 cooking phases can be programmed, (each cooking phase can be used for different cooking methods and parameters).

To set additional phases:

A. Touch the field "+ NEW PHASE"
B. Set the new phase cooking type. Enter all required parameters (as shown in previous pages)
C. Each phase can be adjusted if required. Touch the "See Phase List" field to adjust any of the set phases

Note: If phase one of the phases is set to INF (the oven runs continuously), extra phases cannot be added after that phase.

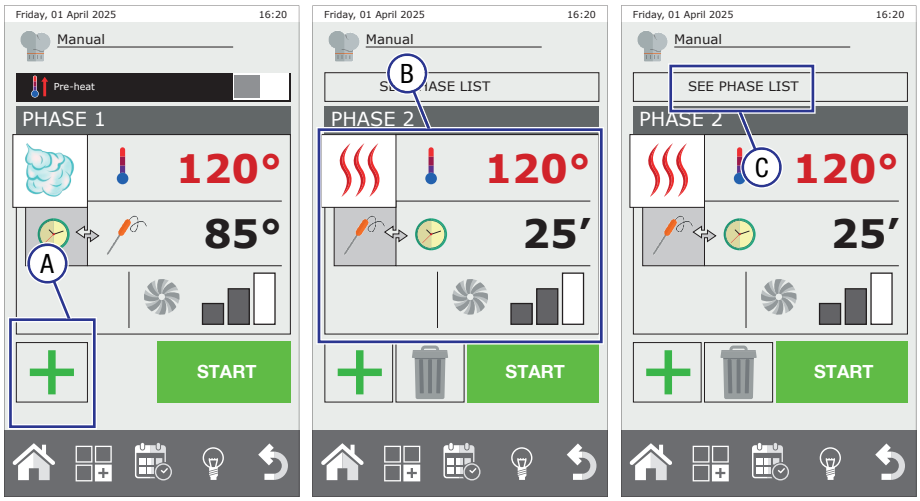

4.3.14 Cooling Phase

The temperature inside the oven chamber can be cooled between phases.
The cooling phase can only be set from phase 2 onwards.
In order to make cooling as fast as possible, do not modify the ventilation and humidity discharge valve values unless indispensable.

To set a holding phase:

A. Touch the field "+ NEW PHASE"
B. Select the cooking method "Cooling"
C. By default the temperature is set to 100°C (the adjustable temperature range is 100°C to 300°C)
D. Load product into the oven, press "Start" (press "+ NEW PHASE" if extra phases is required)

Note: For the cooling phase to perform efficiently, do not close the ventilation valve unless necessary.

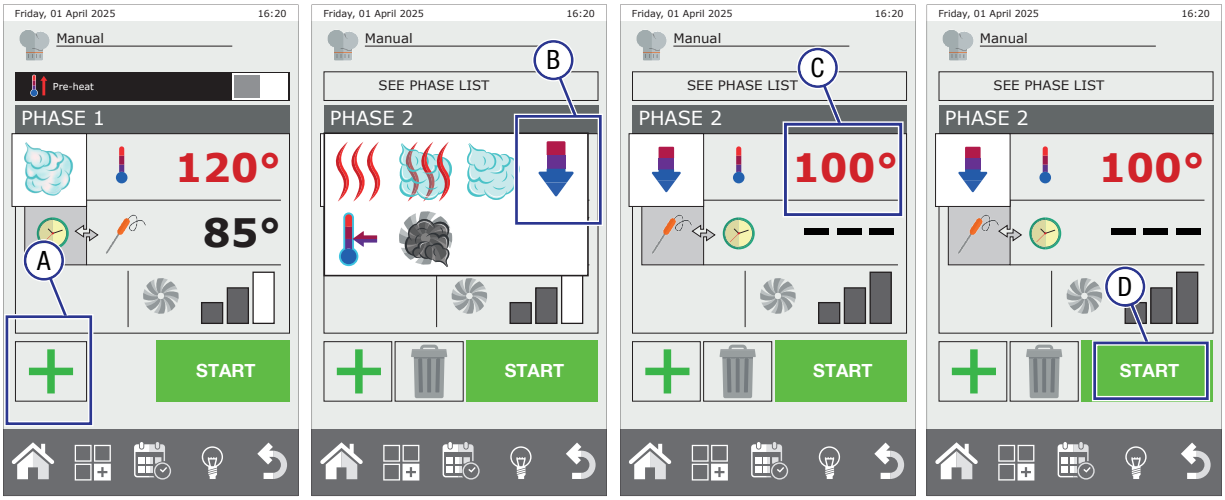

Due to continuous product research and development,
the information contained herein is subject to change without notice.

4.3.15 Smoking Phase

The “Smoker” is a separate unit, this is required when using a smoking phase.
The smoker unit is placed into the oven on one of the trays (before the smoking phase begins).

If a cooking phase is to follow the smoking phase, the smoker unit must be removed from the oven (refer to the Smoker manual for further information regarding the connection and use of the smoker).

To set a holding phase:

A. Select the cooking method “Smoking”
B. Set the parameters (temp, time, fan speed etc.)
C. Load product into the oven, press “Start” (press “+ NEW PHASE” if another phase is required).
Before the program starts, the oven will display a message for the smoker unit to be introduced before the smoking phase begins. At the end of the smoking phases, the oven displays a message for the removal of the smoker unit. Both these messages must be confirmed by the operator. Only after confirmation will the oven begin the next phase (if programmed)

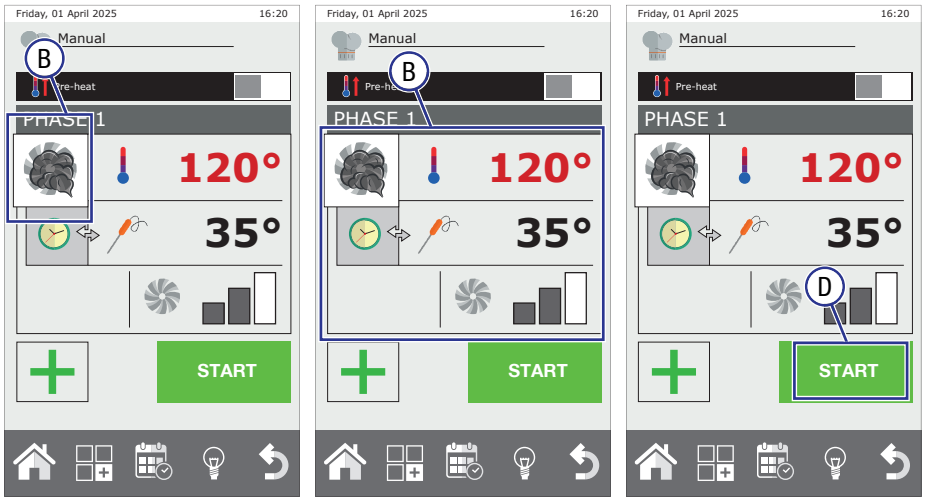

Note: The temperature, time, ventilation and humidity discharge valve can be adjusted during smoking. It is recommended to keep the humidity discharge valve closed so that smoke does not escape from the chamber.

4.3.16 To Delete a Phase

If required one or more phases can be deleted from the manual program.

A. Touch the “See Phase List” to select the phase to be deleted
B. Touch the “DEL PHASE” field. The phase is then removed from the list

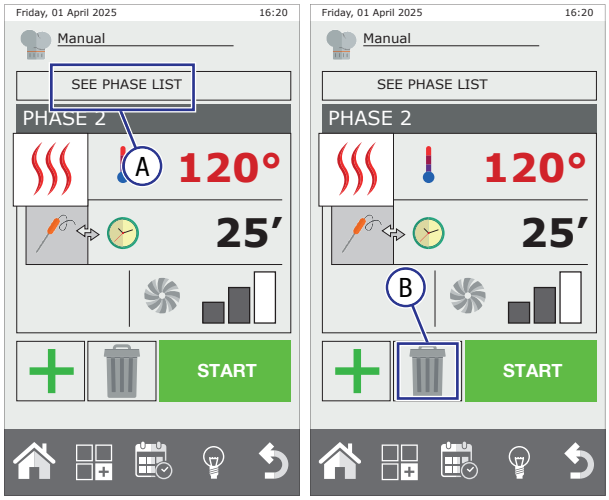

4.3.17 Saving a Recipe

Once the cooking program has been finalised (all required phases set), the cooking program can be saved. The cooking program needs to be assigned to one of the search parameters and named.

A. Touch the settings field
B. Touch “Save program”
C. Touch “Save”
D. Touch the search parameter for the cooking program to be assigned to e.g. “EXTRA” (this will help to find it easily in the future)
E. Touch “FORWARD” to confirm
F. Assign a name to the recipe using the keypad (e.g. “Lasagne”)
G. Touch ENTER to confirm
H. Depending on the type of cooking method selected, the display screen will show the option to change the type of colouring, humidity percentage or cooking level (e.g. cooking method: ROAST), Touch the symbol and set the desired value
I. Turn the navigation dial to adjust the percentage value
J. Press the navigation dial to save the set value

Note: The recipe can be started immediately by touching the “Start” key, or exit the window using the key, to be used later. Saved recipes, can be modified at any time (names / parameters). This will permanently overwrite the recipe.

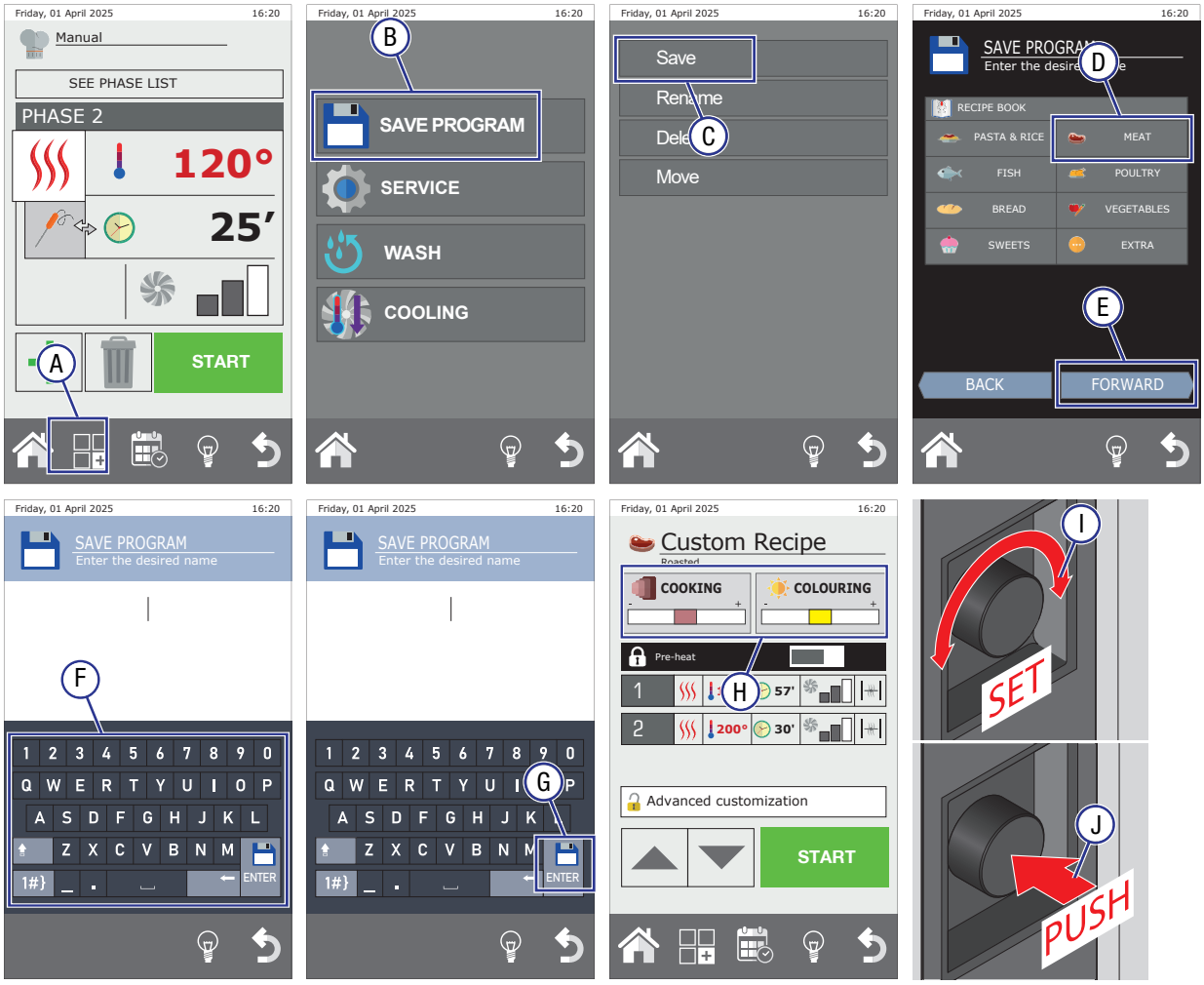

4.3.18 Delete a Cooking Program

A saved manual cooking program can be deleted.
This is done when the cooking program is open.

A. Open the custom cooking program
B. Touch the settings field
C. Touch “Save program”
D. Touch “Delete”
E. Select Yes to delete the cooking program.
Select No to cancel the function

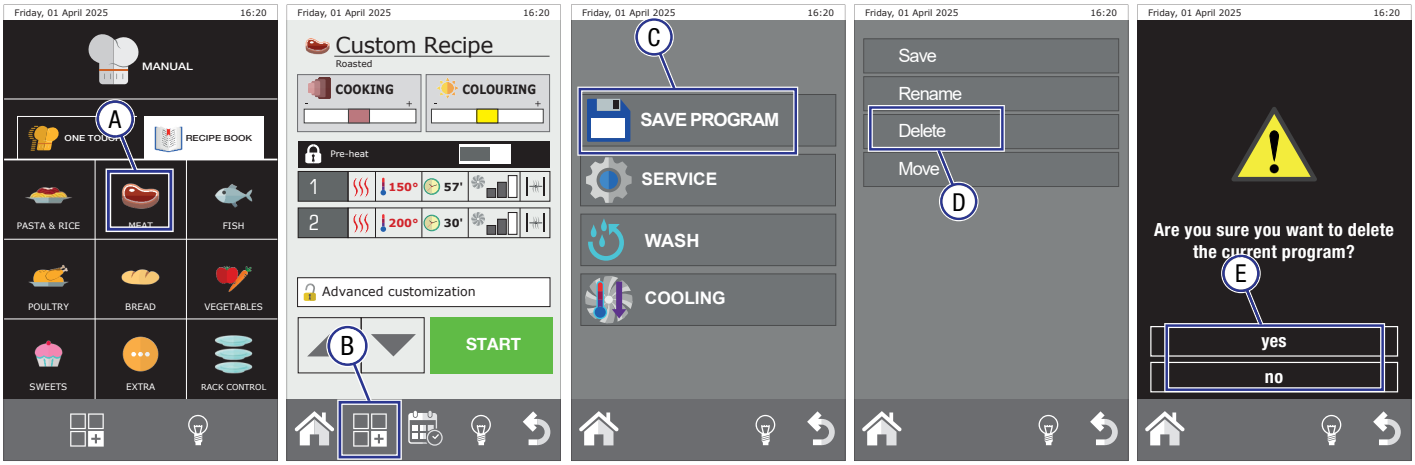

4.3.19 Rename a Cooking Program

A saved manual cooking program can be renamed.
This is done when the cooking program is open

A. Open the custom cooking program
B. Touch the settings field
C. Touch “Save program”
D. Touch “Rename”
E. Assign a name to the recipe using the keypad (e.g. “Lasagne”)
F. Touch ENTER to confirm

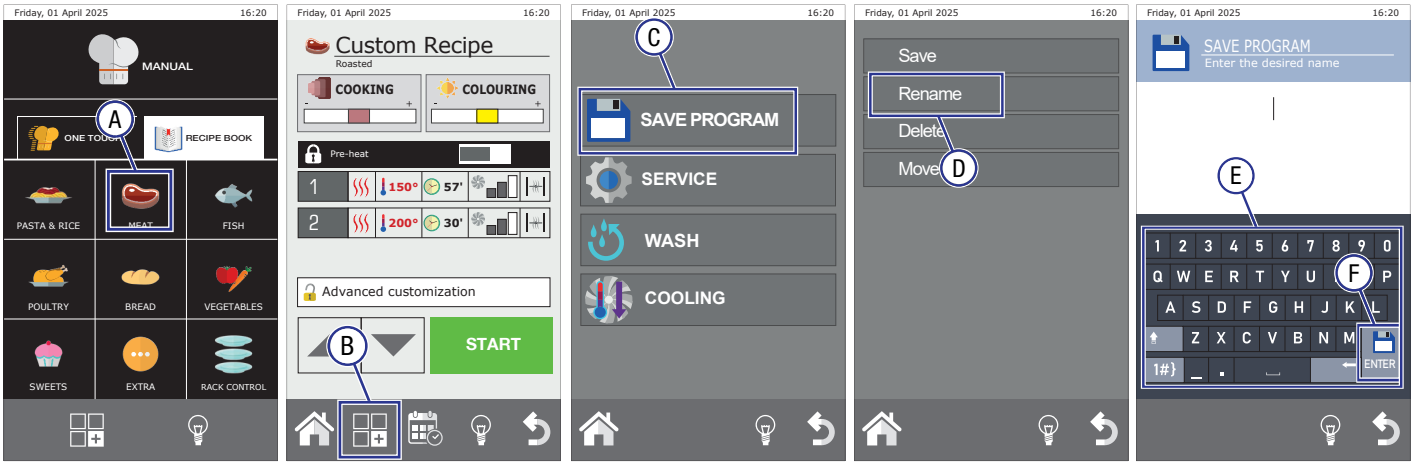

4.3.20 Move a Cooking Program

A saved manual cooking program can be moved to a new recipe book or cooking method.
This is done when the cooking program is open.

A. Open the custom cooking program
B. Touch the settings field
C. Touch “Save program”
D. Touch “Move”
E. Select the new location (e.g. “Poultry”)
F. Touch “Forward”
G. The option to enter a new recipe name will be displayed. Assign new name to the recipe use the keypad (e.g. “Lasagne”) or skip to next step
H. Touch “ENTER” to confirm the recipe name

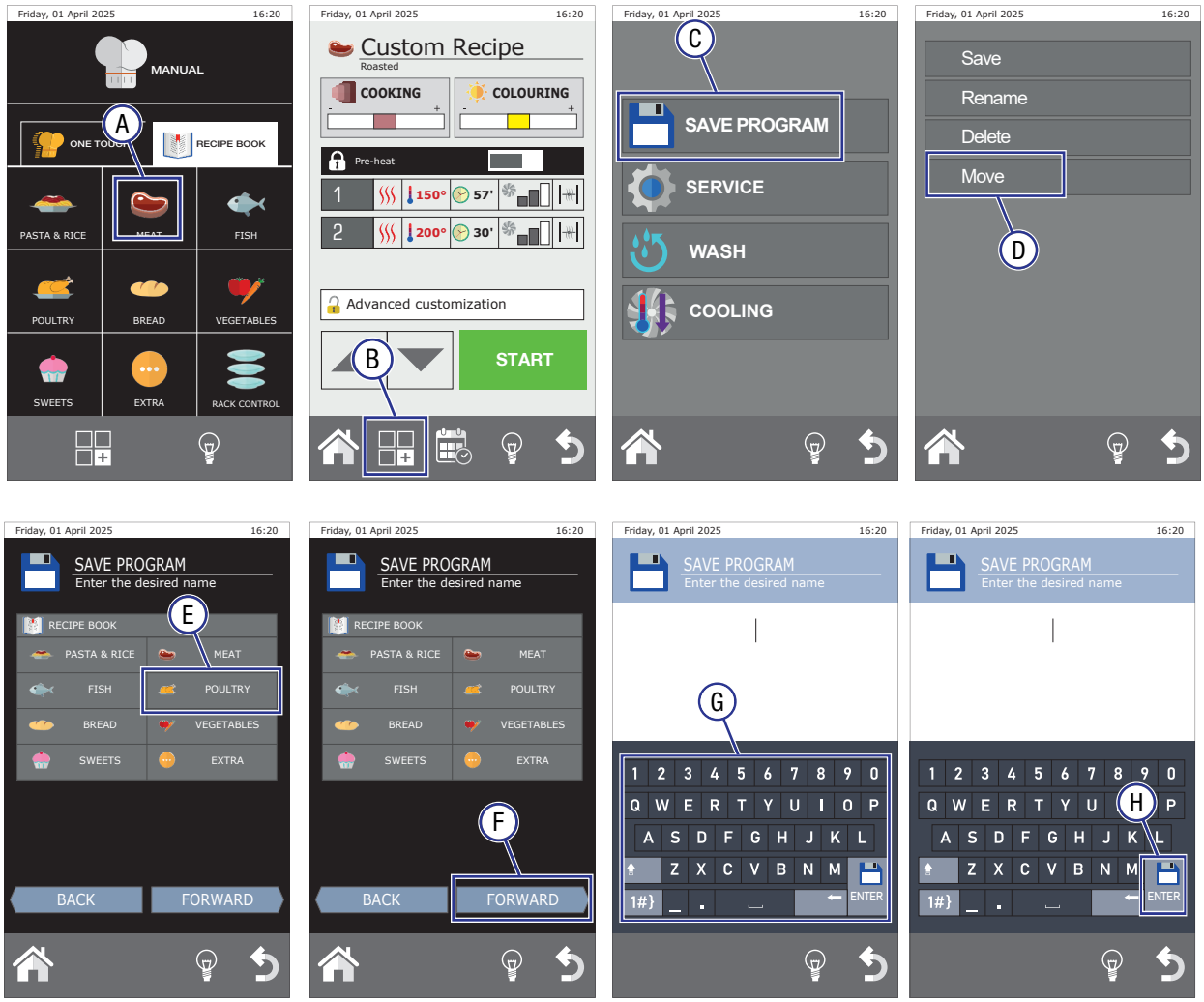

4.4 Automatic Cooking

4.4.1 Cooking Program Selection

Cooking programs can be categorised two ways, Cooking Methods or Recipe Book:

- Recipe Book, categorises the type of dish (e.g. Pasta & Rice, Meat, Poultry etc.)
- One Touch, a selection of 9 user selected recipes for quick access

To switch between these two search methods, touch the “Recipe Book” or “One Touch” field.

Recipe Book

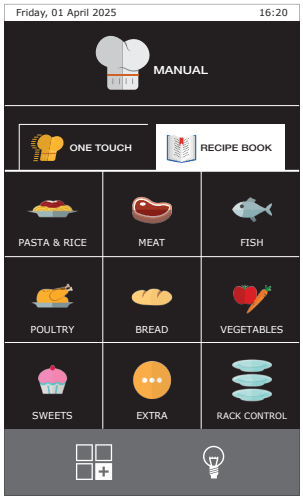

One Touch

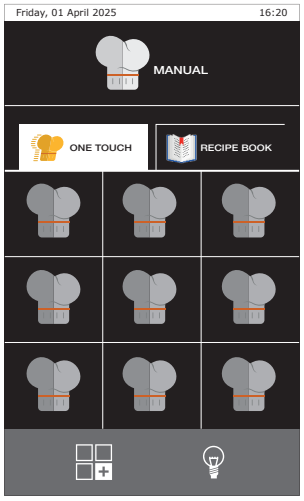

4.4.2 How To Use The Automatic Cooking Program

A. Select the cooking method/category containing the recipe required (e.g. steam)
B. Select the required recipe (e.g. Boiled beef)
C. Based on the recipe, choose the colouring and/or the cooking level by touching the symbol and setting the desired value
D. (Optional) Touch the “Advanced Customization” field, apply any required changes to the cooking phases parameters (e.g. temperature, fan speed).
   - Default Cooking Programs: The changes applied are temporary, i.e. only apply to the cooking cycle to be started
   - Custom Cooking Programs: The changes applied are permanent, i.e. the original program will be overwritten
E. Begin the cooking cycle by touching “Start”

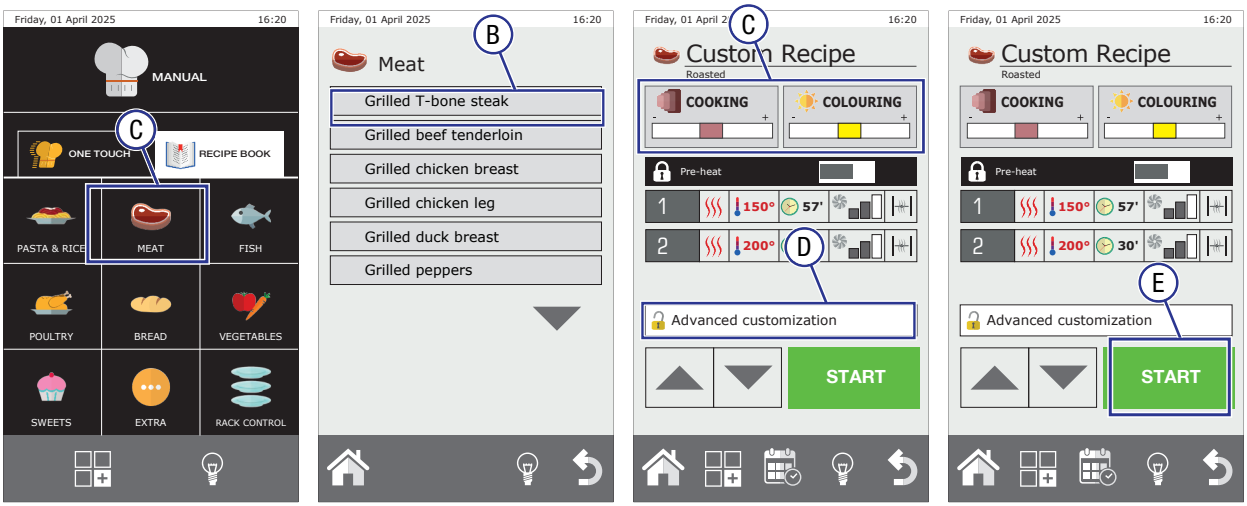

4.5 Special Automatic Cooking Programs

4.5.1 Rack Control - Manual Setting

Manually set timers for each tray (up to 6 or 10 depending on the oven model).

- Once cooking parameters have been set, up to 10 timers can be manually set (each one is assigned to a tray)
- Timers can be set by “Time” and/or one timer can be set using “Core Probe”
- As soon as the set time elapses (if duration is set by the time) or the core probe reaches the set temperature, an audible sound will be emitted and the message “End” will display to warn the operator about which trays are ready to be removed from the oven, while the others keep cooking (the oven runs in INFINITE MODE)

Manual Setting:

A. Press “Rack Control”
B. Select “Manual”
C. Enter the cooking parameters
D. Select a tray
E. Select “Time” or “Core Probe”
F. Turn the navigation dial to adjust the value
G. Press the navigation dial to save the set value to the selected tray. Repeat for the required amount of trays
H. Touch “Start” for the rack control to begin (the countdown timers start)
I. Trays showing “END” can be removed from the oven

4.5.2 Rack Control - Menu Setting

Pre-set menus (e.g. breakfast, multi-baker, etc.), where typical dishes are already loaded with timers already assigned

- Once the cooking parameters have been set, select a menu containing dishes with assigned timers.
  This allows the menu to be customised based on the users requirements
- As soon as the set time elapses (if duration is set by time) or the core probe reaches the set temperature, an audible sound will be emitted and the message “End” will display to warn the operator about which trays are ready to be removed from the oven, while the others keep cooking (the oven runs in INFINITE MODE)

Menu Setting:

A. Touch “Rack Control”
B. Select a customised menu e.g. “Breakfast”
C. Enter the cooking parameters
D. Select a tray
E. Select a menu item to be assigned to the selected tray e.g. “Hash Browns”, or press “+NEW” to create a new menu item
   Repeat for the required amount of trays
F. Touch “Start” for the rack control to begin
G. The countdown timers start. If needed the pre-set timers can be adjusted. Select the tray to be adjusted. Select “Time” or “Core Probe”
H. Turn the navigation dial to adjust the value
I. Press the navigation dial to save the set value to the selected tray
J. The adjusted time is now displayed

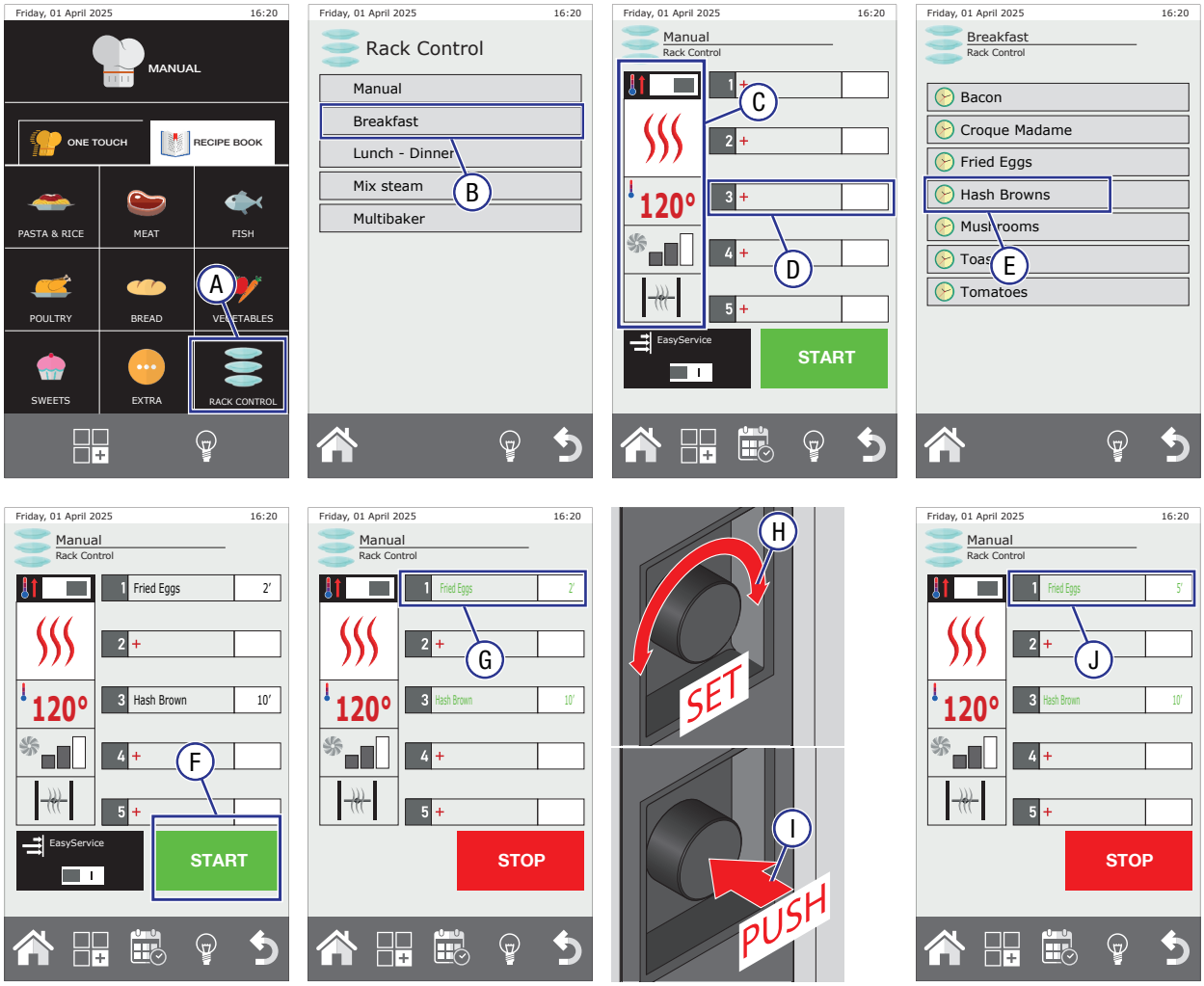

4.5.3 Rack Control - Easy Service

Once the cooking times for each tray have been set (see points - manual setting or menu setting), the EASY SERVICE function can also be selected.
In this case, the dishes will be ALL ready at the same time, as the oven will warn the operator when it is time to put a tray in the oven cavity, based on the duration of the cooking cycle set for each tray.

Easy Service Setting:

A. Press “Rack Control”
B. Select the customised menu e.g. “Breakfast”
C. Enter the cooking parameters
D. Select “Easy Service”
E. Select menu items. Menu items will be assigned to trays in the order starting at 1 in the order selected
F. Touch “Start” for the rack control to begin
G. The countdown timers start. To have the trays ready at the same time, place the “IN” tray into the oven first (add each additional tray as required)

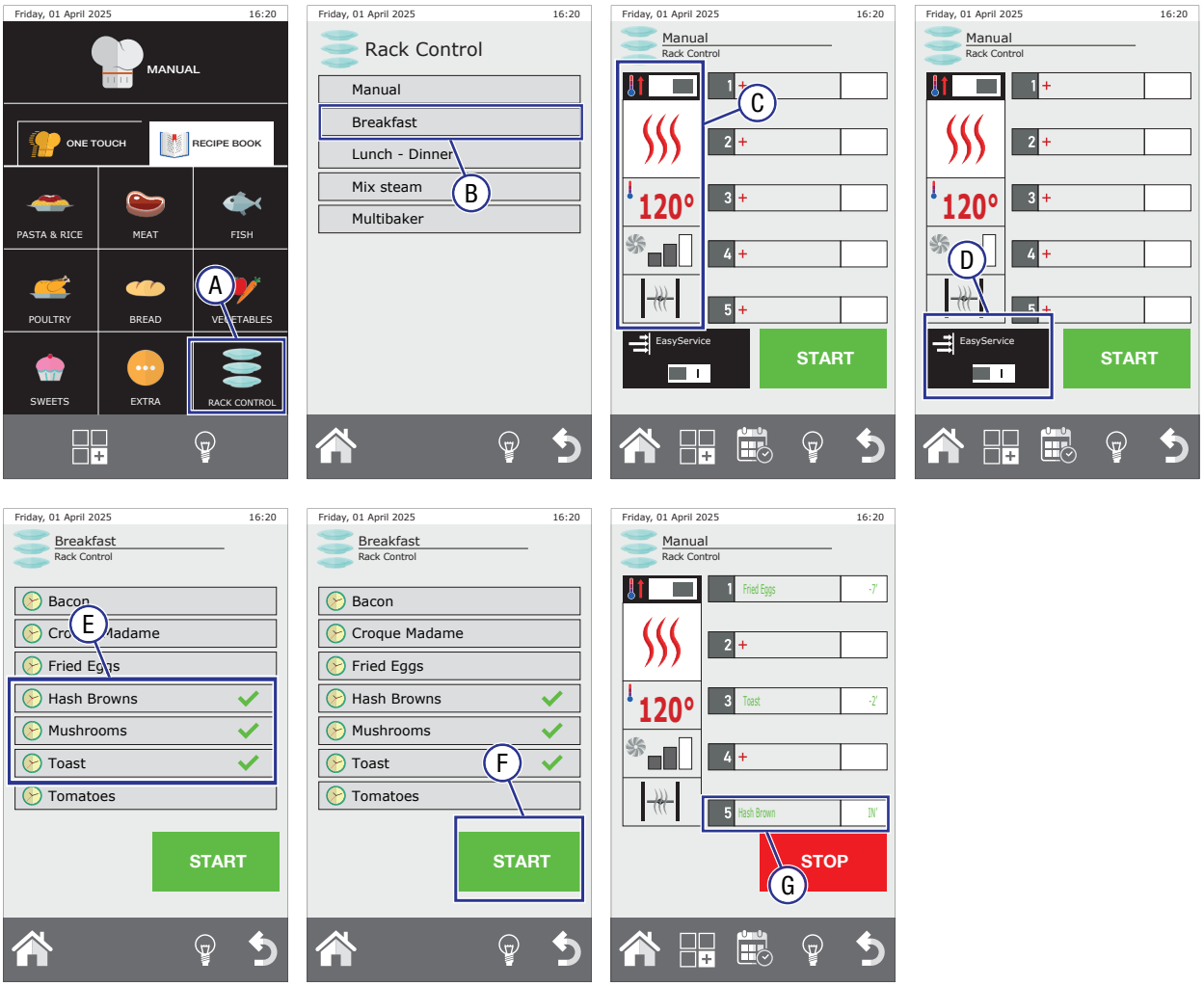

Due to continuous product research and development,
the information contained herein is subject to change without notice.

4.6 Special Functions

4.6.1 Cooling Of The Chamber

Before starting a recipe, the chamber can be cooled before cooking foods that require a lower temperatures or before a wash cycle.
No function can be used when the cooling cycle is in progress.
The cooling cycle can be carried out with the door closed or open. It is recommend keeping the door closed until the temperature has dropped.

CAUTION

Hot Steam and Water
Risk of Scalding
Take care when opening oven door during the cooling cycle

To cool the oven chamber:

A. Touch the “Settings” icon
B. Touch “Cooling”
C. Touch “Start” to begin the cooling cycle

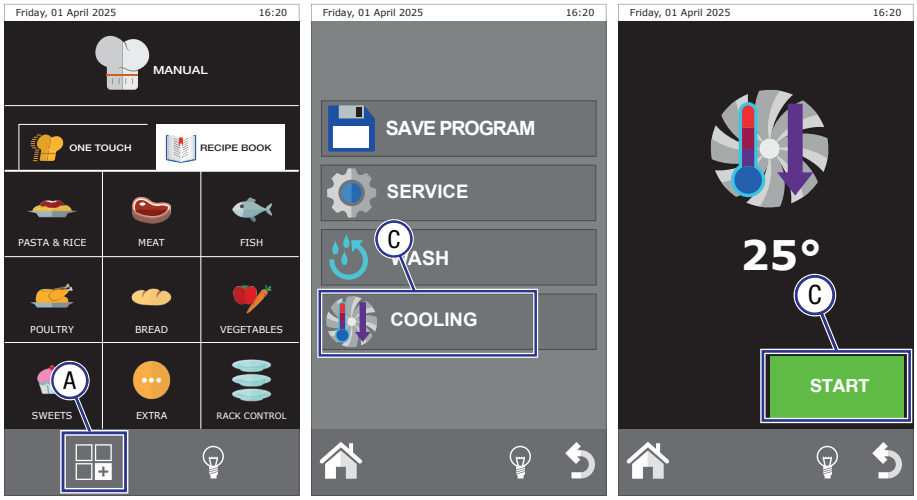

4.6.2 Delayed Start

If required, when setting a cooking program or once a recipe is open, a delayed start time can be set.

To set delayed start:

A. Select the date and time icon
B. Set the date and time for the delayed start to begin
C. Press “OK” to confirm

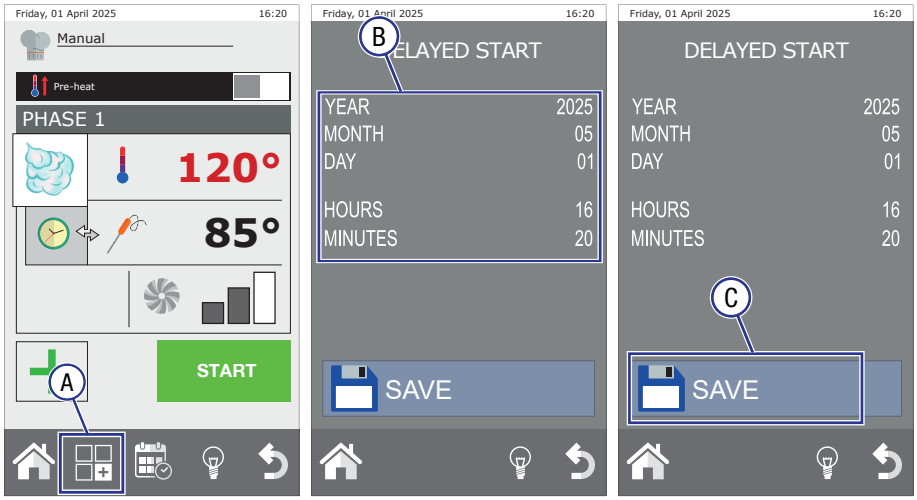

4.7 One Touch

One Touch saves time by accessing user preferred recipe. Save up to 9 cooking programs from either an existing program or user created program.

One Touch Setting:

A. Press “One Touch”
B. Press and hold an icon to allocate a recipe (saved recipes can be overwritten)
C. Select a recipe from the recipe book
D. Select the icon to associate the recipe
E. The recipe program is now available in One Touch mode

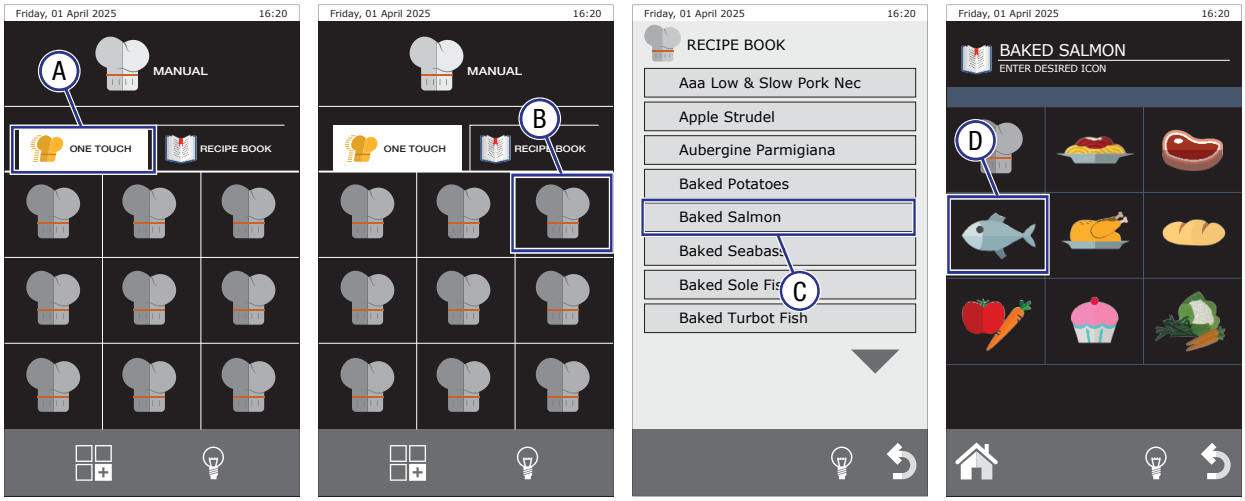

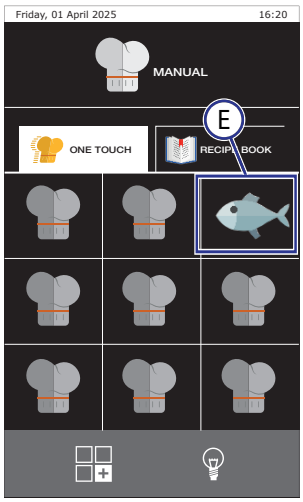

4.8 Importing / Exporting Recipes and Log To USB

Files can be imported/exported (in FAT32 format) to a USB stick. The USB port is on the underside of the front control panel of the oven

Recipes:

- Saved recipes, including altered default recipes can be imported or exported

Logs:

Logs are a list of the events occurred, e.g. wash logs provide information about the type of wash, date and time in which it was carried out.

- HACCP;
- Of the alarms triggered;
- Of the wash cycles carried out.

4.8.1 Import / Export

A. Insert USB into the USB Port. Enter the settings menu
B. Touch “Service”
C. Touch “Import / Export”
D. Select one of the options from the Import or Export menu. e.g. “Export Recipe Book”
E. Touch “Start” to begin the file transfer to USB

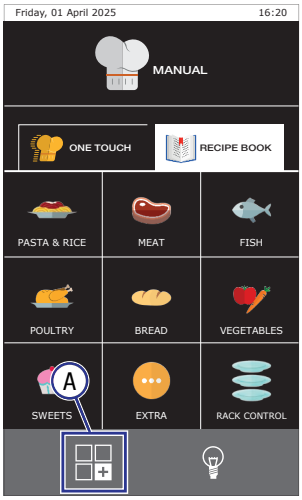

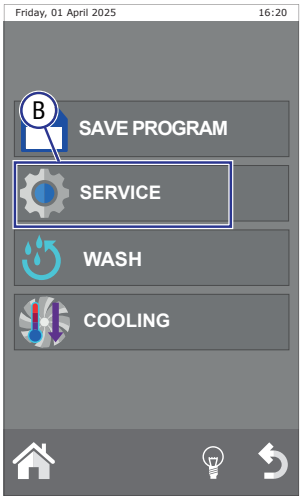

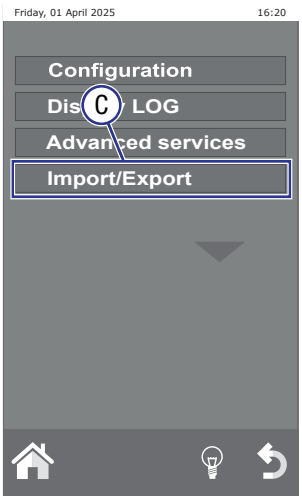

4.9 Display LOG

To display the Logs only:

A. Enter the settings menu
B. Touch “Service”
C. Touch “Display Log”
D. Select “Alarms Log” or “Wash Log”

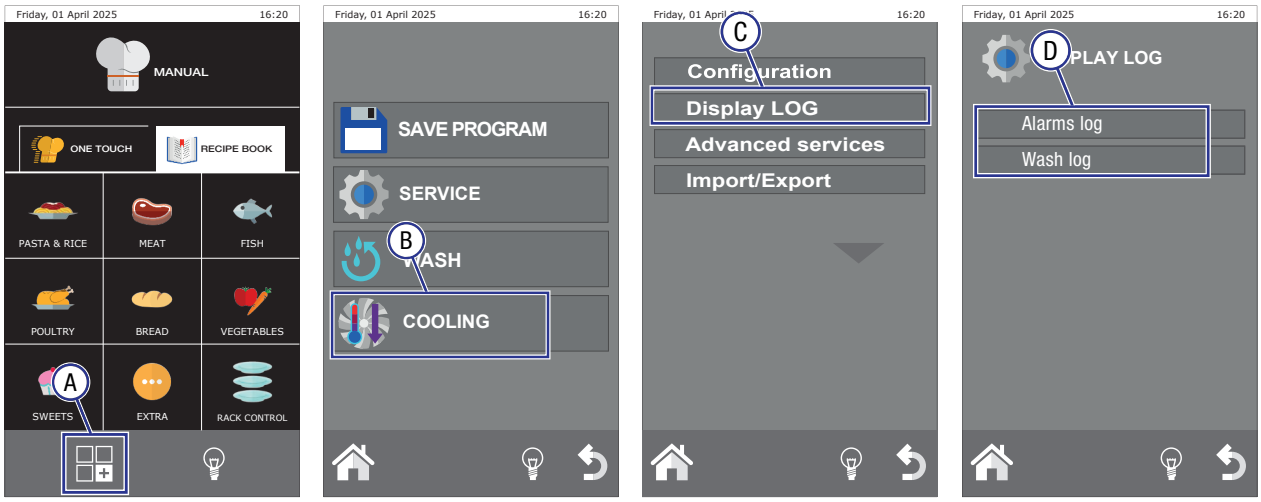

4.10 HACCP Protocol

HACCP (Hazard Analysis and Critical Control Points) is an internationally recognised method of identifying and managing food safety, through the use of preventative procedures that ensures hygiene and health in food.

This protocol begins with the analyses of the possible risks of bacterial, chemical and physical contamination in every stage of the food production process, including storage, distribution and consumption of the finished product.

HACCP identifies the critical points where contamination is more likely to occur. Based on these results, specific procedures are studied and applied to constantly monitor every stage of the food process to prevent hazards.

Due to continuous product research and development,
the information contained herein is subject to change without notice.

5.1 Cleaning

5.1.1 Cleaning and Maintenance Schedule

For good kitchen hygiene, the oven should be visually inspected by management at least once per week. The below 'Cleaning and Maintenance Schedule' provide a cleaning guide for Extreme, Heavy and Light duty operation.
Additionally, a service technician is required to perform the Scheduled Maintenance Services (refer to page 54)

- Daily cleaning is required for the oven, to help maintain and prolong the efficiency of the oven
- The oven should be cleaned at the end of each work day
- DO NOT USE: Wire brushes, steel wool/sponges, scrapers or other abrasive materials
- Wait for the oven chamber to cool down before cleaning. Must be under 100°C

This schedule is a guide only.

Item	Daily	Weekly	1 Month	3 Months	6 Months	12 Months
5.1.6 Cleaning External Surfaces	X					
5.1.7 Cleaning Internal Cavity	X					
5.1.8 Cleaning Glass Door	X					
5.1.9 Cleaning Internal Rack	X					
5.1.10 Inspect Door Seal			X			
5.1.11 Inspect Light Switch			X			
5.1.12 Control Panel Ventilation Filter			X			
5.1.13 Humidity Vent			X			
5.2 Automatic Cleaning	X					
5.3 Liquid Detergent Connection			X			
5.4 Water Filtration				X	X	X

Item	0 hours 1month	2500 hours 12 months	5000 hours 24 months	7500 hours 36 months	10000 hours 48 months
Initial Inspection	X				
Scheduled maintenance service		X			
Scheduled maintenance service			X		
Scheduled maintenance service				X	
Scheduled maintenance service					X

5.1.2 Materials Required

- Stainless Steel Cleaner
- Non Abrasive Cleaning pad
- Clean Sanitised Cloth
- Warm soapy water
- Appropriate PPE (Personal Protective Equipment)

5.1.3 General Information

IMPORTANT	**WARNING**
Threaded fasteners can loosen in service. Regular inspection and adjustment should be carried out as required	**This unit is NOT waterproof, do NOT hose. DO NOT pour water directly onto the unit. DO NOT immerse in water**
IMPORTANT	**WARNING**
Some commercial stainless steel cleaners leave residue or film on the metal that may entrap fine particles of food, deeming the surface not FOOD SAFE	**Wait until the unit has cooled to a safe temperature before undertaking any cleaning or maintenance. Contact with hot surfaces can cause burns and serious injury**

5.1.4 Corrosion Protection

- Cleaning is recommended for health and safety purposes and to prolong the life of the unit
- **DO NOT** use abrasive pads or cleaners on the stainless steel or any other metal parts of the unit
- **DO NOT** use industrial chemical cleaners, flammable cleaners, caustic based cleaners or bleaches and bleaching agents, as many will damage the metals and plastics used on this unit
- **DO NOT** remove any screws and/or panels for cleaning (unless directed)
- This unit is **NOT** waterproof, **DO NOT** hose, **DO NOT** pour water directly onto the unit, **DO NOT** immerse in water

5.1.5 Surface Finish

- Stainless steel exhibits good resistance to corrosion however, if not properly maintained stainless steel can rust and/or corrode
- Any sign of mild rust and/or corrosion should be thoroughly cleaned with warm soapy water and dried as soon as possible
- NEVER use abrasive pads or cleaners for cleaning
- All metal surfaces should be checked while cleaning for damage, scuffs or scrapes as these can lead to rust and further damage to the product
- Mild rust and/or corrosion can be treated with a commercial cleaning agent that contains citric/oxalic/nitric/phosphoric acid.
  DO NOT use cleaning agents with chlorines or other harsh chemicals as this can cause corrosion.
  After treatment, wash with warm (not hot) soapy water and dry thoroughly
- Thoroughly wipe the surfaces dry after cleaning. **DO NOT** let water pool on the unit. Check crevices and folds for pooling
- When using, ensure all liquids and moisture is cleaned up straight away.
  Food liquids such as juices from vegetables and fruits should not be left on any surfaces
- **DO NOT** leave items on the stainless steel such as cutting boards, rubber mats and bottles

- To protect the polished surface of the stainless steel, it should be dried using a clean dry soft cloth. A light oil can be applied to enhance the stainless steel surface, using a clean cloth apply the oil in the same direction as grained polished finish
- Some commercial stainless steel cleaners can leave residue or film on the metal; this may trap fine particles of food on the surface, thus deeming the surfaces not food safe

5.1.6 Cleaning External Surfaces

1. The oven exterior should never be cleaned with direct water or high pressure jets
2. Wipe clean using a cloth dampened with clean warm soapy water until all has been removed
3. Scrub any baked on soil with the cleaner pad in the same direction as grained polished finish. **Do not scrub the display panel**
4. Wipe clean using a cloth dampened with clean warm water until all Stainless Cleaner and soil has been removed
5. Using a clean sanitised cloth, thoroughly wipe the stainless steel and metal parts dry. Do NOT let water pool on the unit. Check crevices and folds

Due to continuous product research and development,
the information contained herein is subject to change without notice.

5.1.7 Cleaning Internal Cavity

Before running the automatic cleaning cycle the oven may require large soil/waste to be manually removed

1. Remove any loose soil from the oven cavity and around the drain using a clean damp cloth
2. Remove the drain can cover and dispose of soil. Do not push/force solid waste into the drain. This is to prevent blockages and possible back-flow
3. Re-insert the drain cover

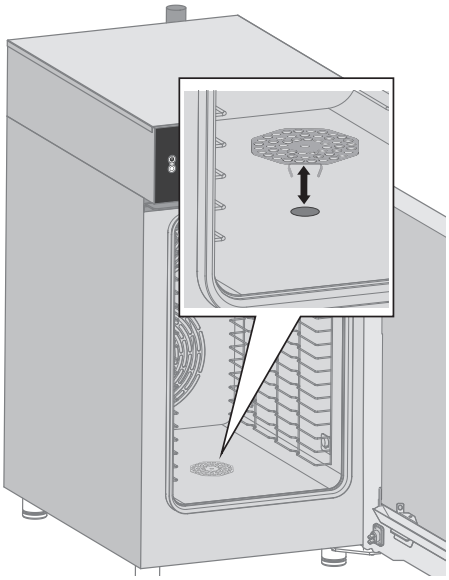

5.1.8 Cleaning Glass Door

The door glass can be cleaned both on the outside and on the inside.

1. Rotate the two latches that lock the internal glass door
2. Swing internal glass door open
3. Clean with warm soapy water and a clean cloth
   Never use abrasive materials
4. Close the glass door, rotate the two latches back into position

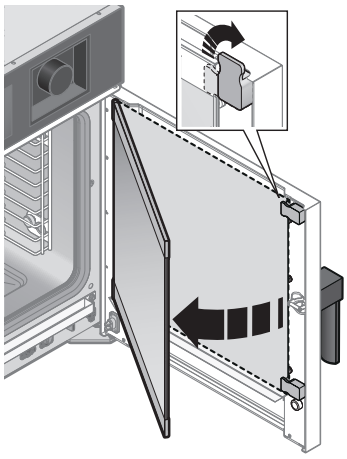

5.1.9 Cleaning Internal Rack

Normally, the automatic wash cycles clean internal racks effectively. However if required, these can be easily removed.

1. Loosen the rack mount screw
2. Lift the rack upward
3. Pull the rack sideways then remove from the oven cavity
4. Clean using warm soapy water, rinse thoroughly and dry
5. Re-install into the oven, ensure the rack locking levers are pushed back into position

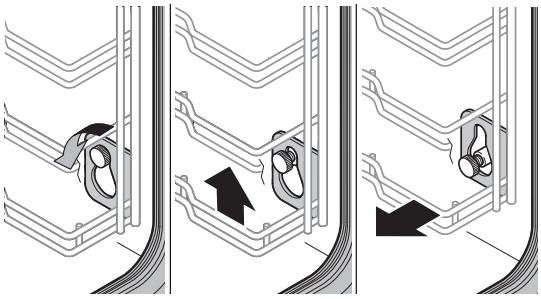

5.1.10 Inspect Door Seal

1. Clean the door gasket with a clean damp cloth
2. Check the door seal for any splits

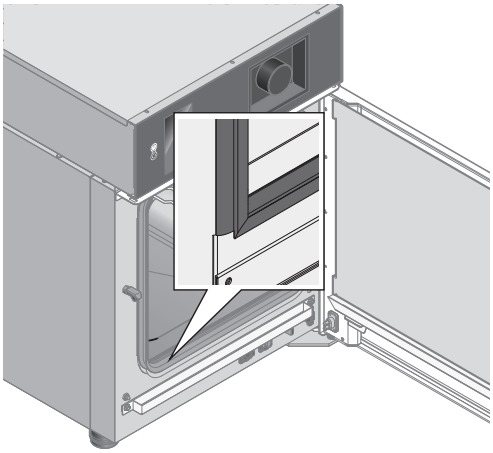

5.1.11 Inspect Light Switch

1. Clean the door light switch with a clean damp cloth, ensure there is no soil on the contact points

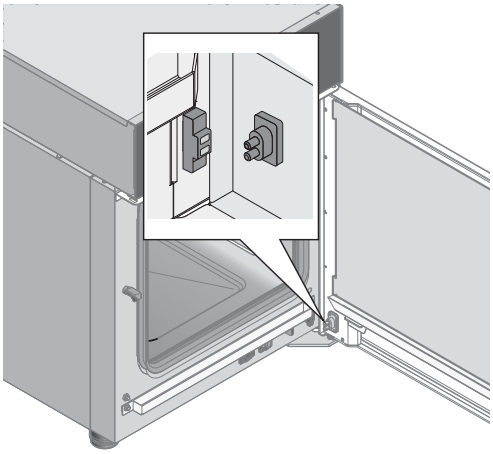

5.1.12 Control Panel Ventilation Filter

In order to keep the electronic components of the oven at a safety temperature, the ventilation filter should be cleaned periodically, at least once a month.
The filter is located on the rear side of the oven “A”.
Proceed as follows:
Holding the filter tab “C”, slide the filter upward to remove. Wash using with warm soapy water, dry with a clean cloth.

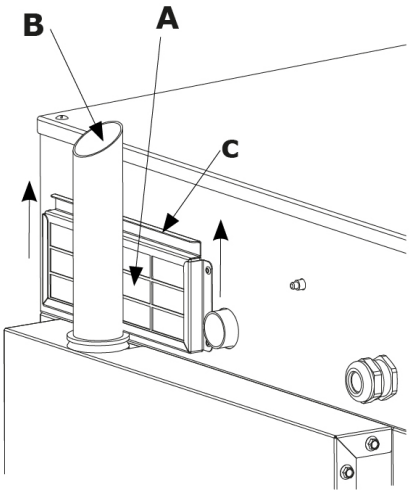

	IMPORTANT
	If the oven enters Hi Temp alarm state, the most probable cause is an excessive dirt accumulation on the filter. Clean the filter immediately

5.1.13 Humidity Vent

Moisture drain “B” ejects the vapours produced inside the oven chamber.
Check that it is clean and free from obstructions.

Due to continuous product research and development,
the information contained herein is subject to change without notice.

5.2 Automatic Cleaning

5.2.1 Wash Selection

There are four options when selecting a automatic wash program.

SOFT		48 minutes	light dirt
NORMAL		53 minutes	normal dirt
HARD		58 minutes	intense dirt
RINSING PROGRAM	The rinse program does not involve the use of detergents		

To select a automatic wash program.

A. Enter the settings menu
B. Touch “Wash”
C. Select appropriate wash program e.g. Hard Wash
D. Press “Start”

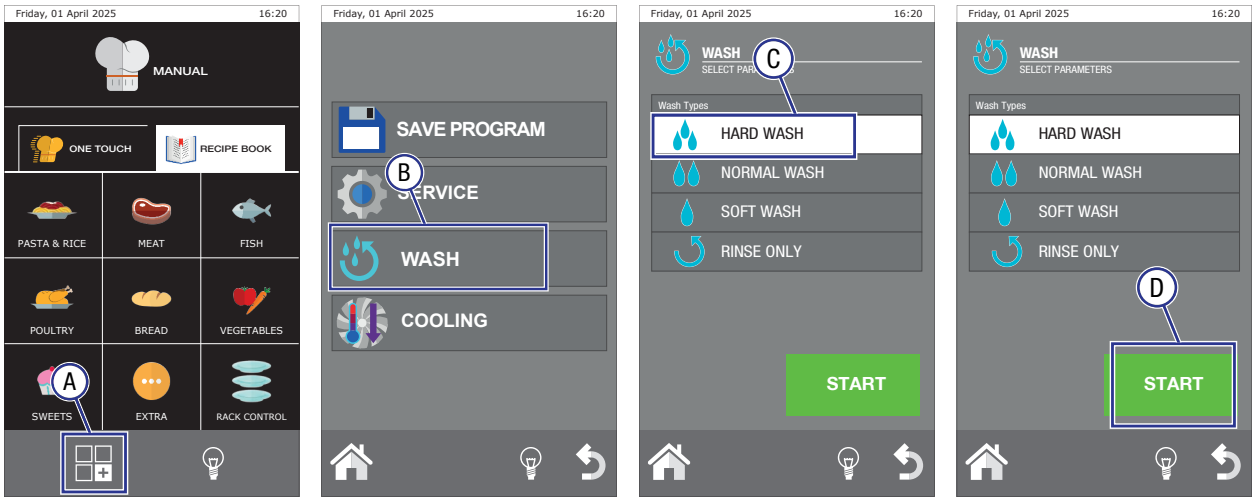

Note: Stoddart recommends using the Stoddart supplied detergent, specific for your oven. Use of non-approved or recommended chemical will void warranty.

5.2.2 Start the Wash Program

	IMPORTANT
	During a wash cycle, do not open the oven's door: Risk of injuries and intoxication due to vapours

Start the wash program by touching "Start"
Depending on the options selected, some windows will prompt the operator to clean the chamber gasket using a soaked cloth and check the level of detergent.

- If the detergent and/or rinse agent tanks need to be replaced, select the relative key:

Detergent replaced	The liquid detergent tank has been replaced

- A window will indicate the progress of the wash program (divided into four stages):

Pre-wash	A "wet" steam phase is carried out without using a detergent to soften coarse residue.
Wash	The wash cycle using a detergent
Rinse	Rinsing of the chamber to remove any trace of detergent.
Drying	Air drying the oven chamber.

Note: If regularly cooking with fatty foods (e.g. pork roast, roasts, etc.), between one cooking cycle and another, it is recommend to start the rinse program to facilitate the final cleaning procedure and ensure the utmost hygiene.

5.2.3 Stop the Wash Program

In certain circumstances the wash cycle may need to be stopped.
The wash cycle can only be stopped at certain stages:

Pre-wash	**STOP ALLOWED** Press "Stop"
Wash	**STOP ALLOWED** Press "Stop". The oven automatically switches to a rinse phase, which cannot be stopped.
Rinse	**STOP NOT ALLOWED**
Drying	**STOP ALLOWED** Press "Stop". The wash cycle stops immediately

Note: If during a wash cycle the power to the oven is disconnected (e.g. power outage, turned off at supply) for a period less than two minutes, the oven will automatically resume the wash cycle when the power is restored.

If during a wash cycle the power to the oven is disconnected (e.g. power outage, turned off at supply) for a period longer than two minutes, when the power is restored, a message will be displayed about the power outage and a audible sound is emitted. A rinse will automatically start this cannot be stopped.

Due to continuous product research and development,
the information contained herein is subject to change without notice.

5.3 Liquid Detergent Connection

IMPORTANT

Only Stoddart provided oven cleaners should be used.
Other products may lead to voidance of warranty!

Detergent line located on the underside of the oven

- If using the optional Stoddart bottle holder, place the holder on the outside of the grid rack
- Remove the bottle cap from the liquid detergent
- Drill a 8mm hole in the centre of the cap
- Feed the detergent line through the bottle cap
- Attach the weight to the detergent line
- Place the line and weight back into the bottle and secure bottle cap
- Cleaning products must not exceed 10% Sodium Hydroxide. Exceeding 10% Sodium Hydroxide will void warranty
- Wear appropriate PPE

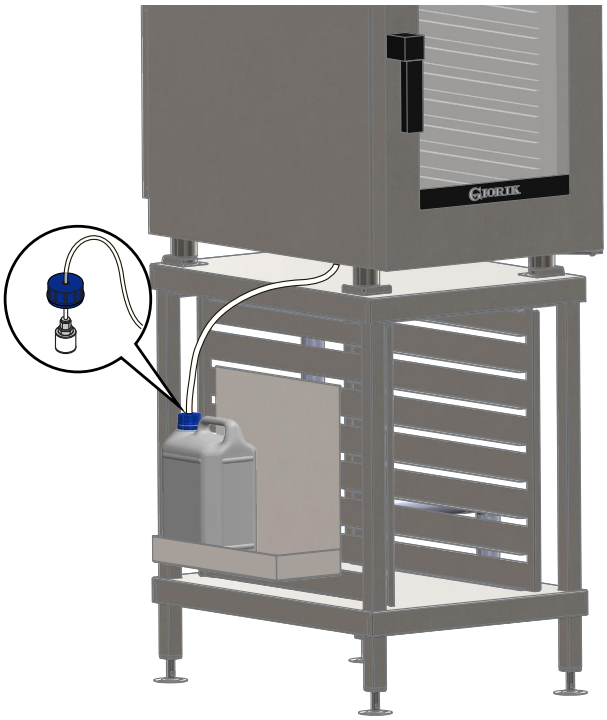

5.5 Troubleshooting

5.5.1 Common Problems

In the event of severe failure, it is essential to turn off the appliance at the circuit breaker, and close the water shut-off valve located upstream of the appliance.

PROBLEM	POSSIBLE SOLUTION
The oven does not start.	Check that the circuit breaker is closed and the grid voltage is present
	Make sure the oven door is properly closed
	Make sure you have set the parameters of the cooking cycle properly
	Make sure the oven is not in failure
	If the problem persists, contact the Stoddart Service Department
The fans stops during operation.	Turn off the oven and wait for the thermal breaker of the motor to be restored automatically
	Make sure the cooling vents are not obstructed
	If the problem persists, contact the Stoddart Service Department
Water is not delivered from humidifier pipes	Check that the water shut-off valve is open
	If the problem persists, contact the Stoddart Service Department

5.5.2 Door Micro Switch

The door micro-switch is the device which stops the cooking cycle of the oven when the door is opened. Once the door is closed, the regular cycle is resumed. Do not operate this device manually with the oven door open.

5.5.3 Motor Thermal Breaker

The fan motor is equipped with a built-in thermal protection which stops operation in case of overheating. The motor restarts automatically as soon as its temperature is lowered, returning within the safety range.

5.5.4 Oven Chamber Safety Thermostat

If the temperature in the oven chamber reaches 350°C, the thermostat disconnects the power supply to the heating elements of the oven. This safety device can be reset by removing the safety button cap, then pressing the “safety reset” button located at the back of the oven. If problem persists contact the Stoddart service department.

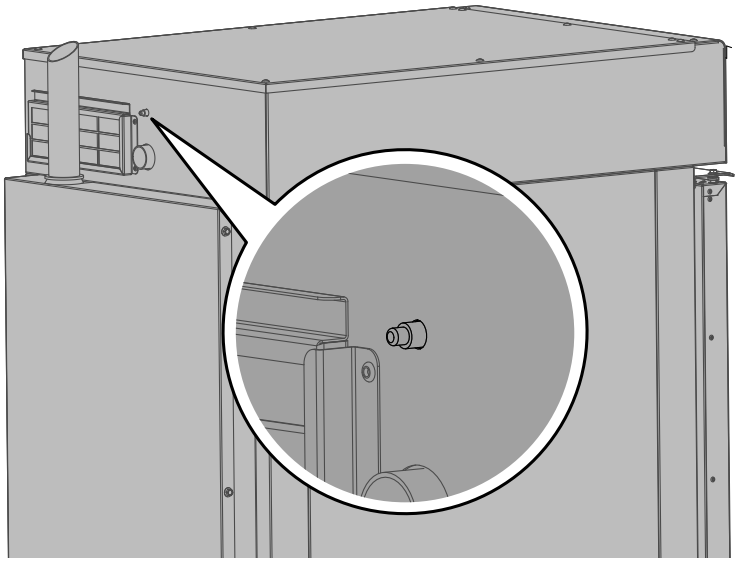

Due to continuous product research and development,
the information contained herein is subject to change without notice.

5.5.5 Technical Problems / Alarm Code

WARNING

Technician tasks are only to be completed by qualified service people. Check faults before calling service technician.

ALARM	DESCRIPTION	ACTION	SOLUTIONS
E000 - Chamber probe	Chamber probe failure	Cooking stopped, automatic restore	Replace chamber probe. Contact the Stoddart service department
E001 - Motor safety	Motor Alarm 1 Problem with upper motor	Cooking stopped, automatic re-arm	If continuous, contact the Stoddart service department
E002 - Chamber safety	Chamber safety thermal.	Cooking stopped, manual re-arm	Check the safety thermostat (page 54).
E004 - Hi temp	Technical compartment temperature too high.	Cooking stopped, automatic restore	Check oven's perimeter ventilation, the lower air filter (page 54) and the correct functioning of the cooling fans of the components.
E005 - Communication	Main board communication error	Cooking stopped	Switch off at main, if persists: Contact the Stoddart service department
E006 - Motor safety	Motor Alarm 2 Problem with lower motor	Cooking stopped, automatic re-arm	If continuous, contact the Stoddart service department
E007 - Motor safety	Motor Alarm 3 Problem with centre motor	Cooking stopped, automatic re-arm	If continuous, contact the Stoddart service department
E030 - Hi temp	Technical compartment temperature too high.	Cooking stopped, automatic restore	Check oven's perimeter ventilation, the lower air filter (page 54) and the correct functioning of the cooling fans of the components.
E031 - Core probe	Core probe error	Manual restore	Replace core probe. Contact the Stoddart service department
E032 - Power failure	Electrical power failure	Cooking stopped	Press encoder button for 1 Second.

5.6 Scheduled Maintenance Service History

To ensure the continued performance and reliability of this oven, routine maintenance and servicing are required at specific time intervals. Contact the Stoddart Service Department to book a service.

Australia
Email: service@stoddart.com.au
Tel: 1300 307 289

New Zealand
Email: service@stoddart.co.nz
Tel: 0800 935 714

5.6.1 Service Log

Initial Inspection

0 - 1month

Date: .....

Hours: .....

Technician: .....

Scheduled maintenance service

2500hours / 12months (whichever occurs first)

Date: .....

Hours: .....

Technician: .....

Scheduled maintenance service

5000hours / 24months (whichever occurs first)

Date: .....

Hours: .....

Technician: .....

Scheduled maintenance service

7500hours / 36months (whichever occurs first)

Date: .....

Hours: .....

Technician: .....

Scheduled maintenance service

10000hours / 48months (whichever occurs first)

Date: .....

Hours: .....

Technician: .....

SDS sheets will be provided with each delivery.

Due to continuous product research and development,
the information contained herein is subject to change without notice.

5.7 Accessories and Consumables

5.7.1 Spare Parts

Contact the Stoddart Spare Parts department to place an order.

Australia
Email: spares@stoddart.com.au
Tel: 1300 307 289

New Zealand
Email: spares@stoddart.co.nz
Tel: 0800 935 714

Code	Description
CNCL.0105	Combi Foam Oven Cleaner - 2 x 5 Litre (liquid chemical)
SPGI.SMK01	Digital Smoker
SPGI.6000129	Sous Vide Probe
SPGI.CBH.002	Wall Mount Bracket (liquid chemical)
SPGI.CBH.001	Side Stand mounting (liquid chemical)

SDS sheets will be provided with each delivery.

Online Order

6.1 Notes

Due to continuous product research and development,
the information contained herein is subject to change without notice.

Australia

Australian Business Number: 16009690251

Service / Spare Parts

https://customerservice.stoddart.com.au

Sales

Tel: 1300 79 1954

Email: sales@stoddart.com.au

Web: www.stoddart.com.au

Customer Service Portal

New Zealand

New Zealand Business Number: 6837694

Service / Spare Parts

https://customerservice.stoddart.com.au

Sales

Tel: 0800 79 1954

Email: sales@stoddart.co.nz

Web: www.stoddart.co.nz

Customer Service Portal