# SER061WT

GIORIK
INNOVATIVE COOKING EQUIPMENT SINCE 1963

Steam box EVOLUTION

## SERE061WT.xx.H

**R Series - Steambox** Combi Oven Electric, 6 x 1/1 GN Recirculating Ventless Hood

## Product Information

- Direct steam injection system
- Humidity control
  - 0 - 100%
  - Super Steam - 2 level steam saturation
- Large 7'' touch screen interface
- Cooking modes, convection, combination & steaming:
  - **Convection** 50° - 300°
  - **Combination** 50° - 270° with automatic steam adjustment
  - **Steaming** 50° - 120°
- Simple 'One Touch' cooking menu
- Preset cooking menu, with ability to store additional 1000+
- Overnight cooking, sous vide cooking
- Rack control - Easy service - Oven load/unload management system
- 6 fan speeds - inverter controlled - brake when door opened
- Preheat and cool down functions
- Chamber LED lighting
- Double glazed glass door
- Core probe - single point
- WIFI - for access to Giorik cloud
- USB connection point, HACCP data storage
- Automatic washing system - liquid
- Optional - Oven with left hand (LH) hinge door

- **24-month warranty (Terms and conditions apply)**

## Specification

| | |
|---|---|
| **Standard Filter** | **SERE061WT.SF.H** |
| Optional - LH | SERE061WT.SF.L.H |
| **Reverse Osmosis** | **SERE061WT.RO.H** |
| Optional - LH | SERE061WT.RO.L.H |
| **W x D x H (mm)** | 863 x 1122 x 1236*<br>893 x 1122 x 1236* (Optional - LH) |

*Dimensions do not include water filtration system

| | |
|---|---|
| **Weight** | 132kg |
| **Capacity** | 6 x 1/1 GN Pans |
| **Total Connected Load** | 12.17kW / 25A circuit* |
| **Electrical Connection** | 3Ø + N + E 415VAC / 50Hz<br>L1 = 16.8A / L 2 = 15.2A / L3 = 15.2A |

*Circuit required to be determined at installation by a qualified electrician.

| | | |
|---|---|---|
| **Cold Water Connection** | 3/4 BSP<br>300-350 kpa<br>Min 10°C - Max 30°C | |
| **Water Quality Requirements** | **Hardness** | 60-100ppm |
| | **TDS** | <100mg/L |
| | **Cl Chloride** | <20mg/L |

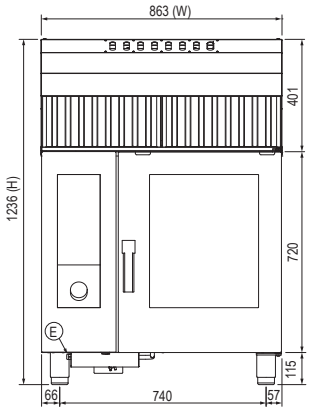


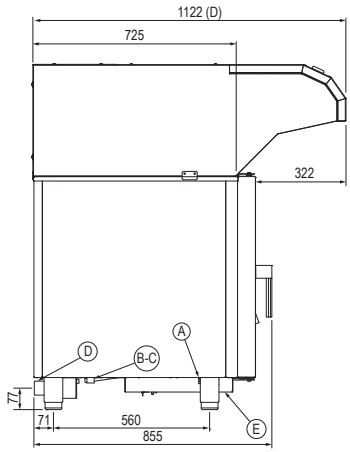


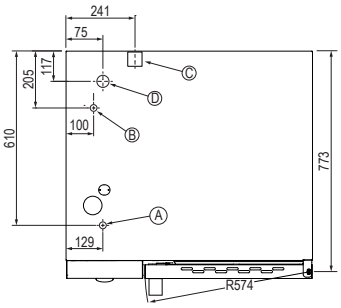


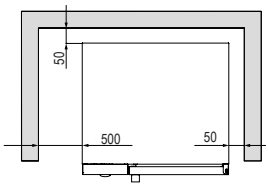


*Clearance requirements
*Drain line must be vented

## Legend

| | |
|---|---|
| **A** | Electrical Connection |
| **B** | Filtered Water Inlet 3/4" BSP |
| **C** | Drain Connection 50mm |
| **D** | Humidity Vent |
| **E** | Detergent & Rinse Aid Inlet |

**Heat Source:** 500mm clearance from an external heat source is required in order to protect the oven control components and allow access to the service panel. For clearances under 500mm, it is mandatory for Stoddart heat shields to be fitted while still maintaining a minimum clearance of 300mm to provide access to the service compartment. Failure to adhere to minimum clearances may void the oven warranty or add service costs due to lack of access.

**Non-Heat Source:** Generally 300mm clearance is required from the control panel side to allow access to the service panel. Any distance under 300mm, may add service costs due to lack of access.

Revision: B - 21/05/2026 - 01

www.stoddart.com.au
www.stoddart.co.nz

WaterMark
AS WMTS-101
Lic WM-022773

Due to continuous product research and development,
the information contained herein is subject to change without notice.

STODDART®