SIDE VIEW PARTS EXPLOSION

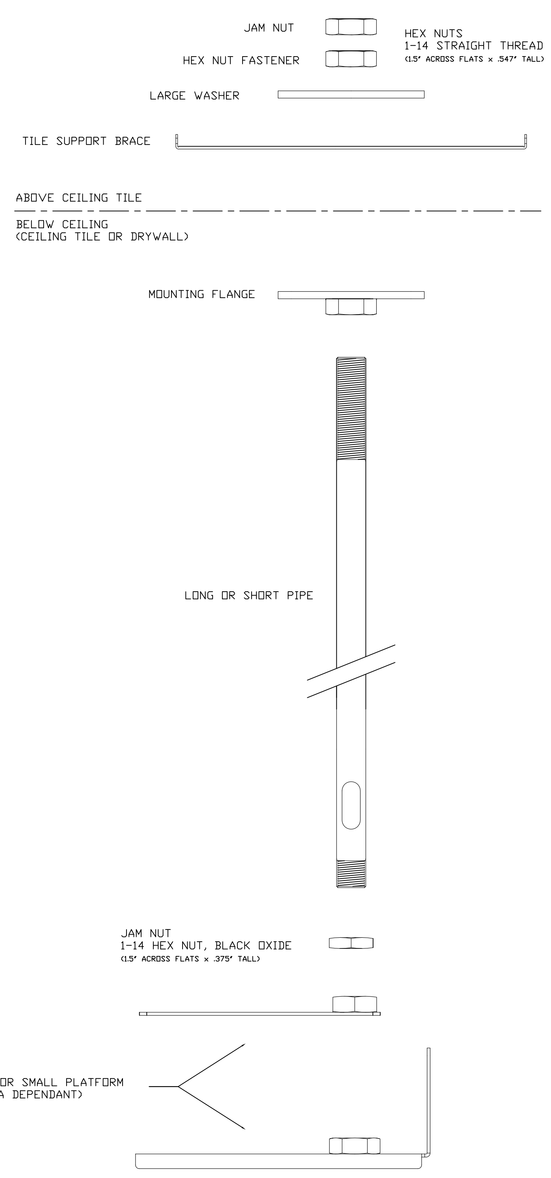

SMALL PLATFORM (USED IN 535-2000-290 & 535-2000-291)

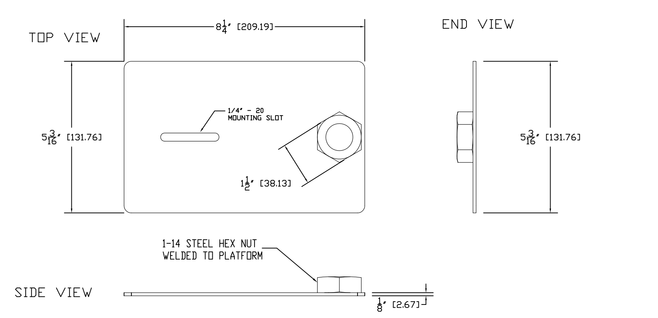

LARGE PLATFORM (USED IN 535-2000-292 & 535-2000-293)

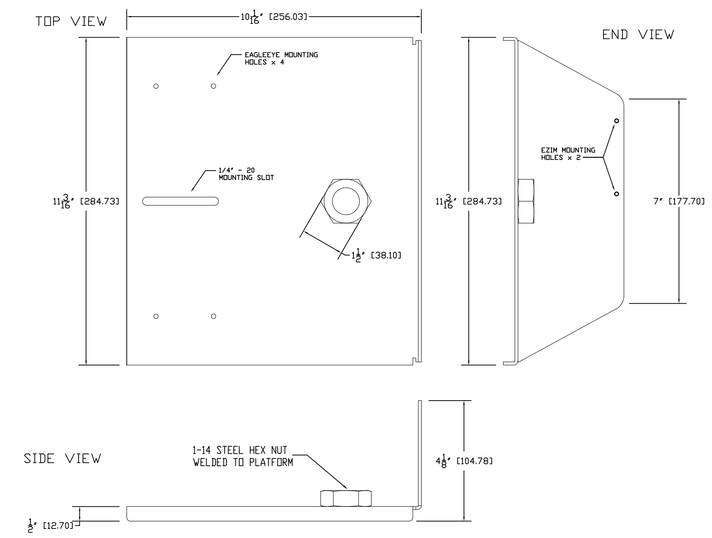

TILE SUPPORT BRACE

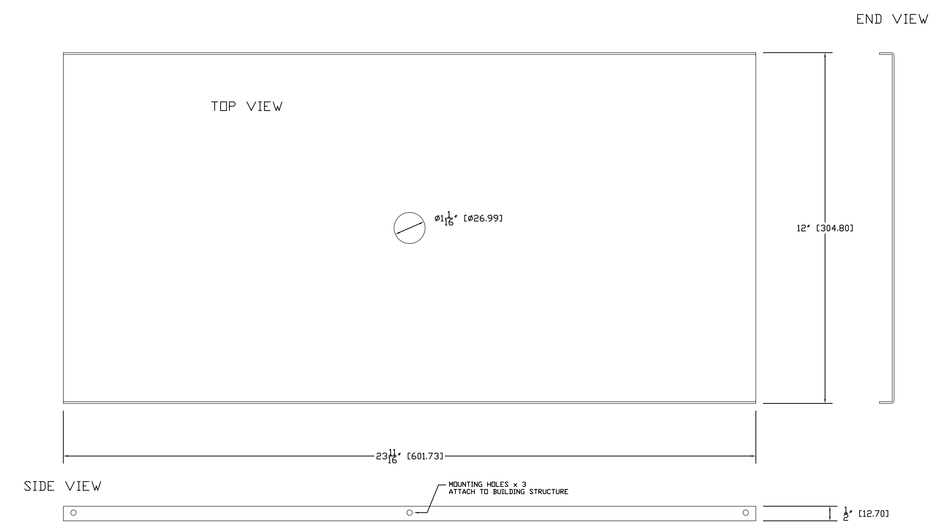

LARGE WASHER

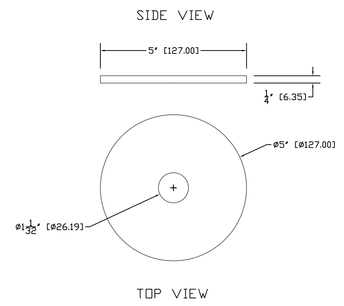

MOUNTING FLANGE

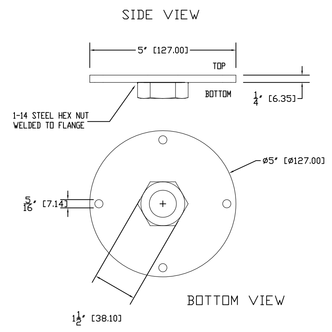

1-14 LARGE HEX NUT

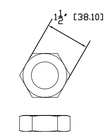

LARGE HEX NUT
1-14 STRAIGHT THREAD
2 HEX NUTS PER SKU
1-FASTENER NUT, 1-JAM NUT
FOR USE ABOVE CEILING TILE
(1.5" ACROSS FLATS x .547" TALL)

1-14 JAM NUT

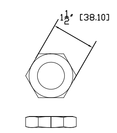

JAM NUT
1-14 STRAIGHT THREAD
BLACK OXIDE FINISH
(1.5" ACROSS FLATS x .375" TALL)

LONG AND SHORT 1" OD THREADED PIPES

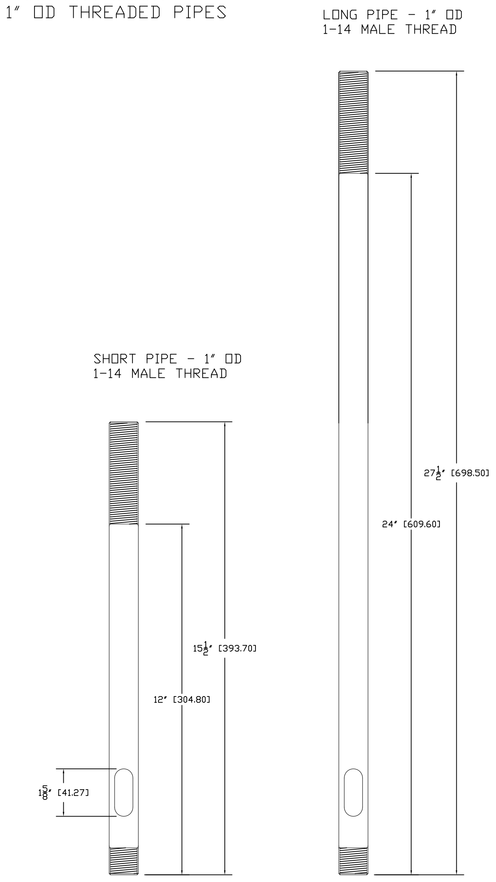

PRODUCT CONFIGURATIONS AND PART NUMBERS

SMALL PLATFORM DROP DOWN SERIES MOUNTS

535-2000-290 SHORT PIPE, SMALL PLATFORM
SIDE VIEW WITH SONY EVI-D100 CAMERA

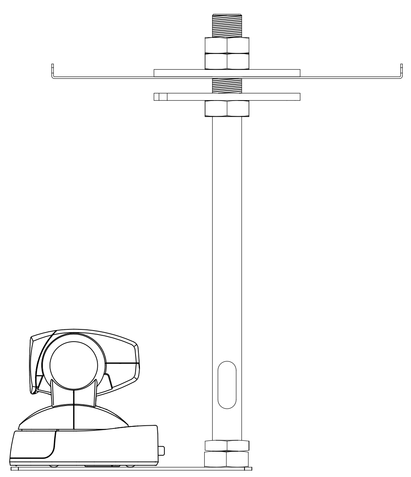

535-2000-291 LONG PIPE, SMALL PLATFORM
SIDE VIEW WITH SONY EVI-D100 CAMERA

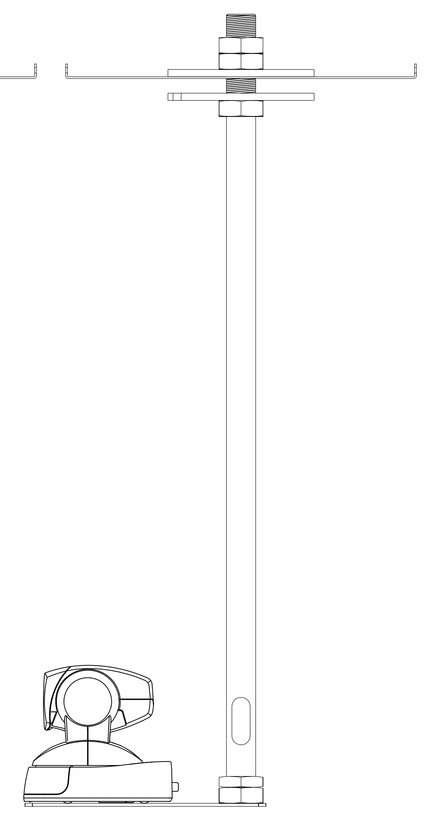

LARGE PLATFORM DROP DOWN SERIES MOUNTS

535-2000-292 SHORT PIPE, LARGE PLATFORM
SIDE VIEW WITH SONY EVI-HD1 CAMERA
AND EZIM INTERFACE MODULE FOR
WALLVIEW PRO SYSTEMS

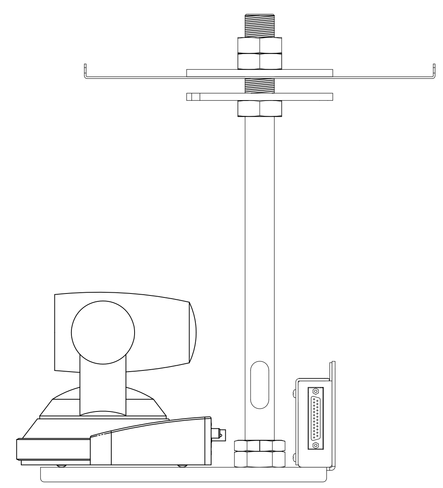

535-2000-293 LONG PIPE, LARGE PLATFORM
SIDE VIEW WITH SONY EVI-HD1 CAMERA
AND EZIM INTERFACE MODULE FOR
WALLVIEW PRO SYSTEMS

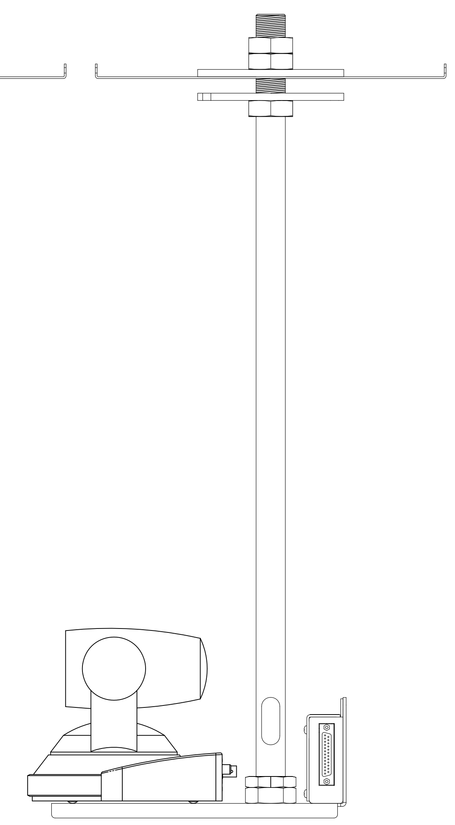

Touchboards
205 Westwood Ave, Long Branch, NJ 07740
Phone: 866-94 BOARDS (26273) / (732)-222-1511
Fax: (732)-222-7088 | E-mail: sales@touchboards.com

vaddio

GENERAL NOTES:
DIMENSIONS ARE IN INCHES [mm] UNLESS OTHERWISE NOTED.
DO NOT DISTRIBUTE WITHOUT EXPRESS WRITTEN PERMISSION OF VADDIO. DUE TO OUR CONTINUING EFFORTS TO ENHANCE OUR PRODUCTS, WE RESERVE THE RIGHT TO CHANGE SPECIFICATIONS WITHOUT PRIOR NOTICE OR OBLIGATION.

DROP DOWN SERIES MOUNTS

PART NUMBERS 535-2000-290, 535-2000-291, 535-2000-292 & 535-2000-293, MULTIPLE VIEWS

DRAWN	CHECKED	APPROVED	DATE
RAR/VLF		RAR	04/06/2008

THIS DRAWING, INCLUDING ALL SUBJECT MATTERS INDICATED THEREIN OR DERIVED THEREFROM, COMPRISES PROPRIETARY INFORMATION AND IS THE EXPRESS PROPERTY OF VADDIO.
All Rights Reserved - Copyright 2008

MATERIALS	STEEL	SCALE	1:1	DRAWING No.	REV
FINISH	BLACK FLAT POWDERCOAT PCC # 886-394	SIZE	LARGE	290-293	B