DATE	SYM.	DESCRIPTION	DR	CK	REL

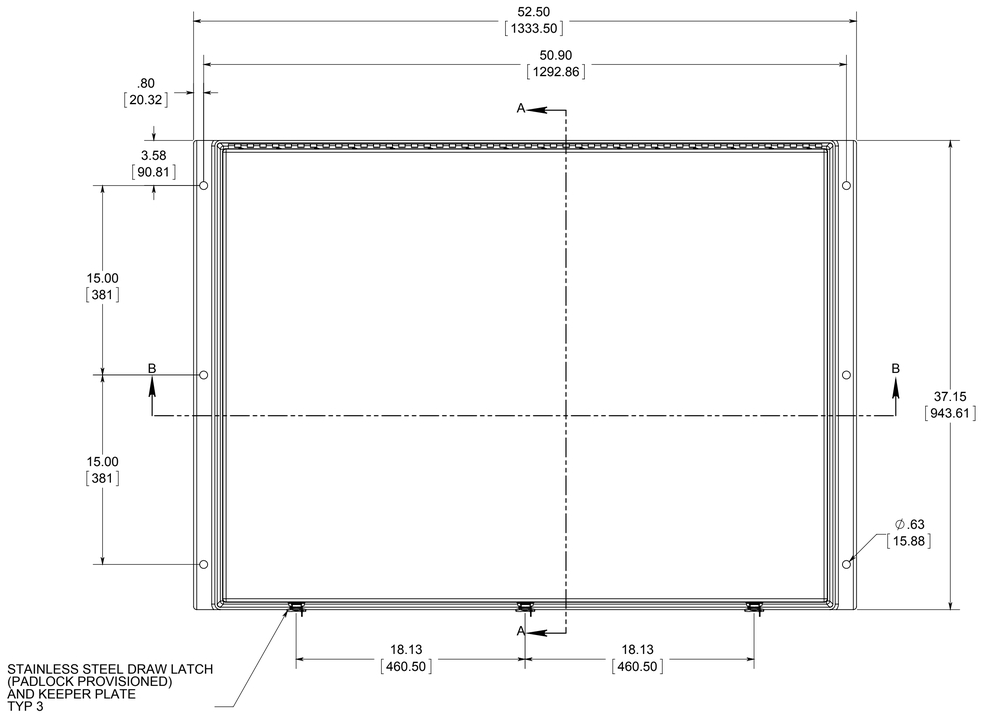

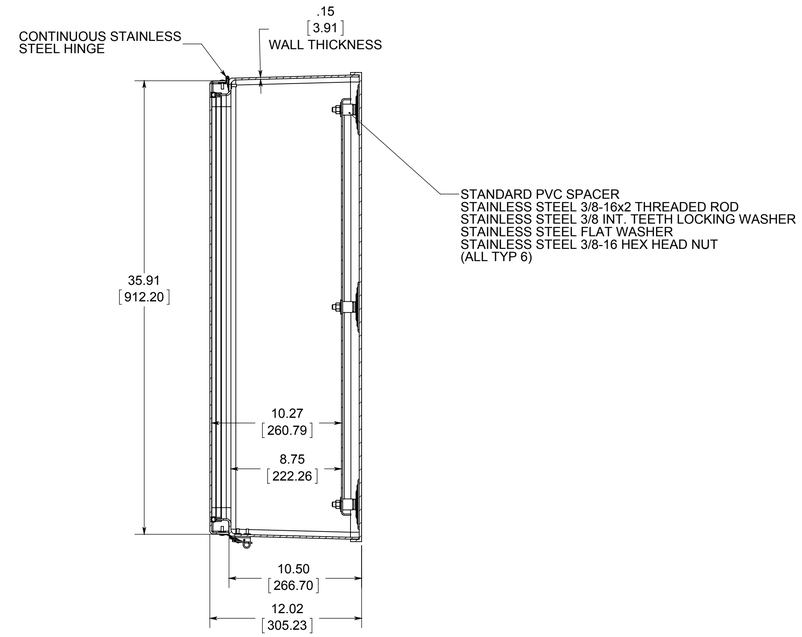

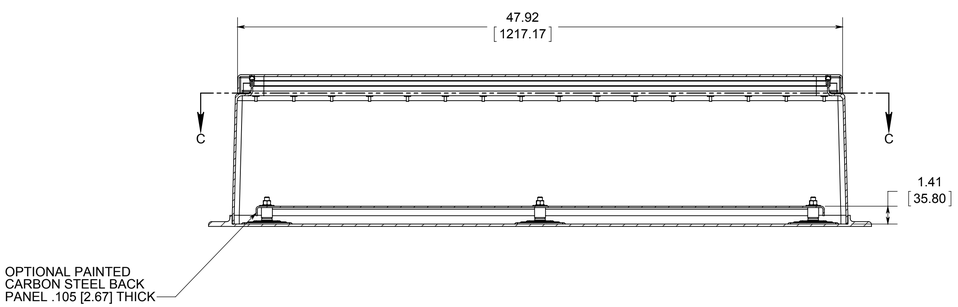

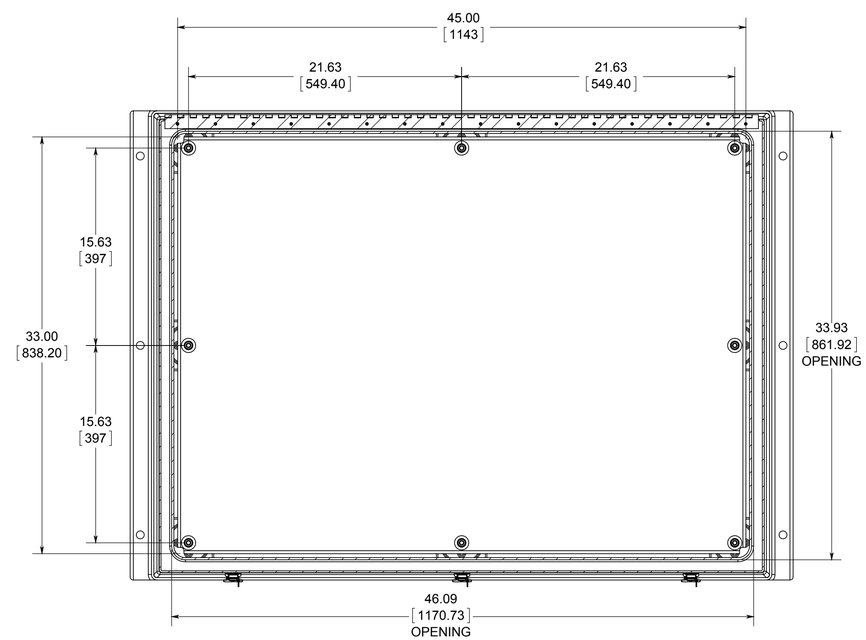

SECTION C-C
TOP VIEW WITH LID AND GASKET REMOVED

MATERIAL:
BOX- GEL-COAT, FIBERGLASS, RESIN
COVER- GEL-COAT, FIBERGLASS, RESIN
EDM GASKET SEAL

CONFIDENTIAL
THIS MATERIAL IS OWNED BY THE ALLIED MOULDED PRODUCTS COMPANY, IS DISCLOSED IN CONFIDENCE, AND IS NOT TO BE REPRODUCED OR DISTRIBUTED WITHOUT PRIOR WRITTEN PERMISSION FROM ALLIED MOULDED PRODUCTS.

ALLIED MOULDED PRODUCTS®
BRYAN, OHIO
The Original Fiber Glass Outlet Box

Description
EMPIRE SERIES

Part No.
AM483612L