Date	Rev	Description	ECN No.	DR	CK	REL
05/31/2016	01	INITIAL RELEASE	ECN-11359	SMZ	MER	GEL
-	-	-	-	-	-	-
-	-	-	-	-	-	-

ISSUE DATE:

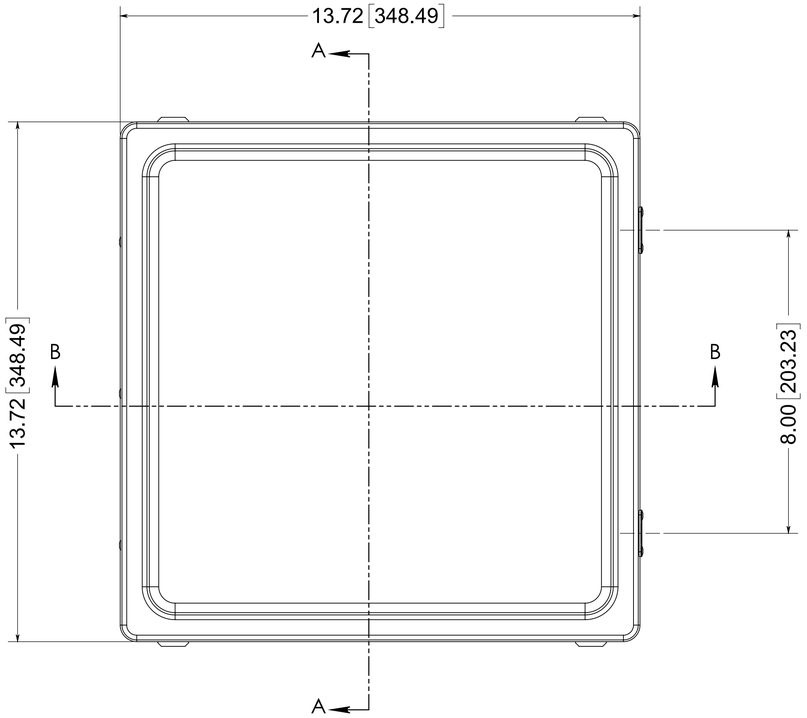

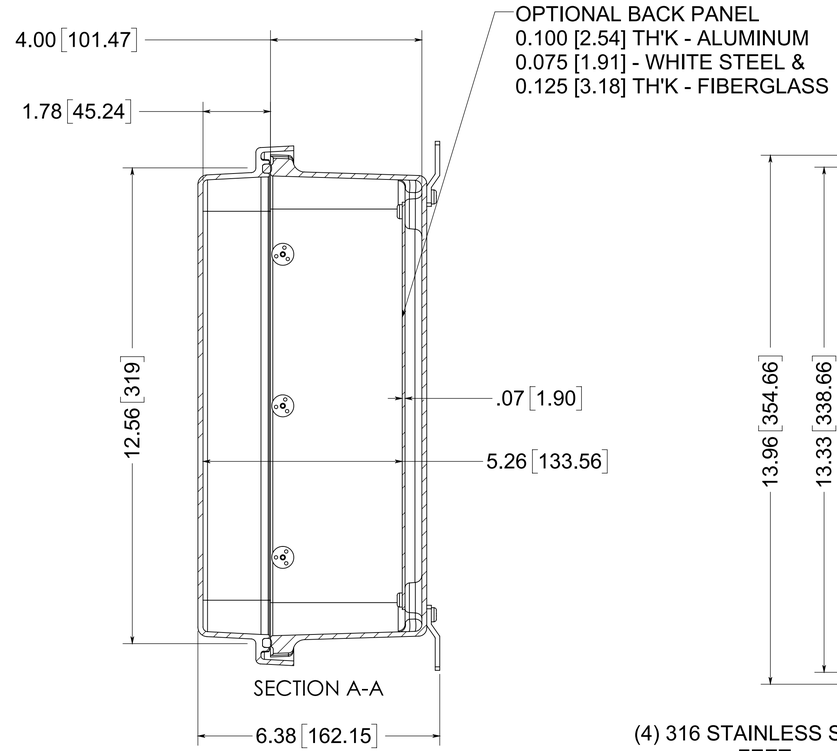

SECTION A-A

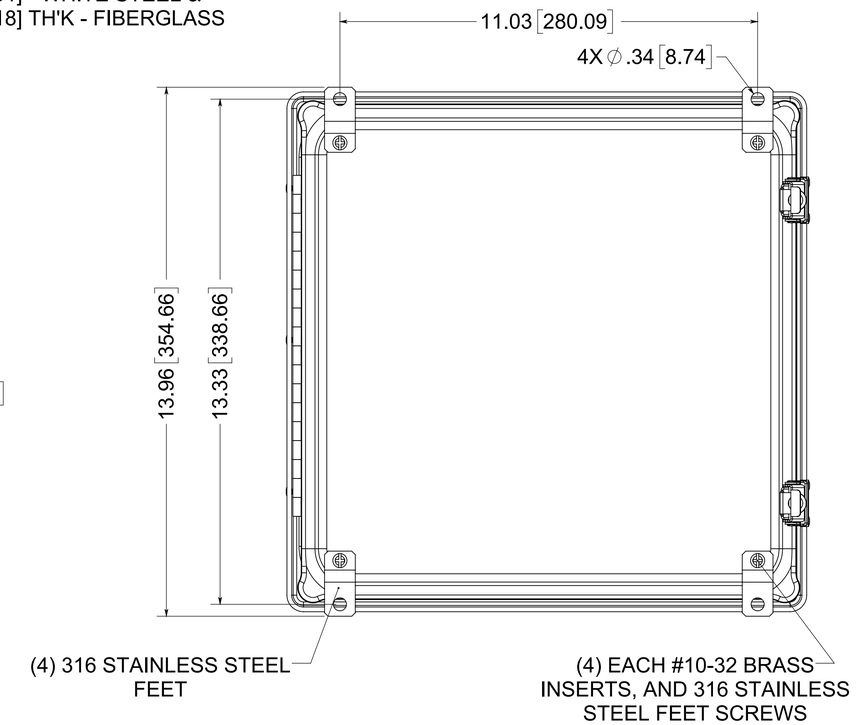

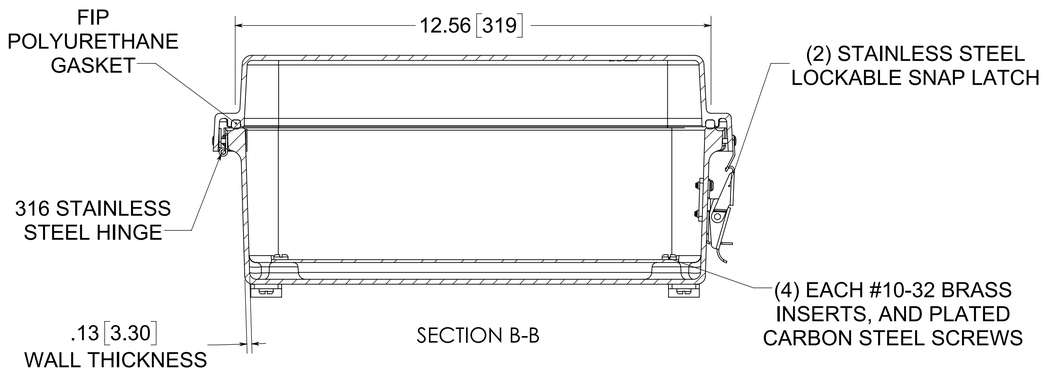

SECTION B-B

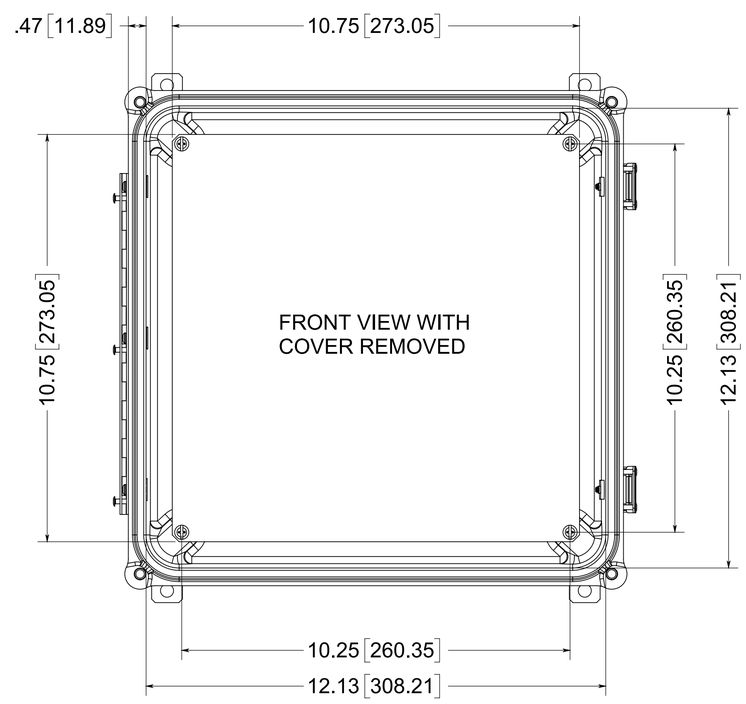

NOTE:
1.DATA SUBJECT TO CHANGE WITHOUT NOTICE

MATERIAL:
BOX - COMPRESSION MOLDED FIBERGLASS REINFORCED POLYESTER
COVER - COMPRESSION MOLDED FIBERGLASS REINFORCED POLYESTER
WINDOWS - POLYCARBONATE

CONFIDENTIAL
THIS MATERIAL IS OWNED BY THE ALLIED MOULDED PRODUCTS COMPANY, IS DISCLOSED IN CONFIDENCE, AND IS NOT TO BE REPRODUCED OR DISTRIBUTED WITHOUT PRIOR WRITTEN PERMISSION FROM ALLIED MOULDED PRODUCTS.

ALLIED MOULDED PRODUCTS
BRYAN, OHIO
The Original Fiber Glass Outlet Box

Description
AM Series

Part No.
AM1224RL