ISSUE DATE: 09/30/2013

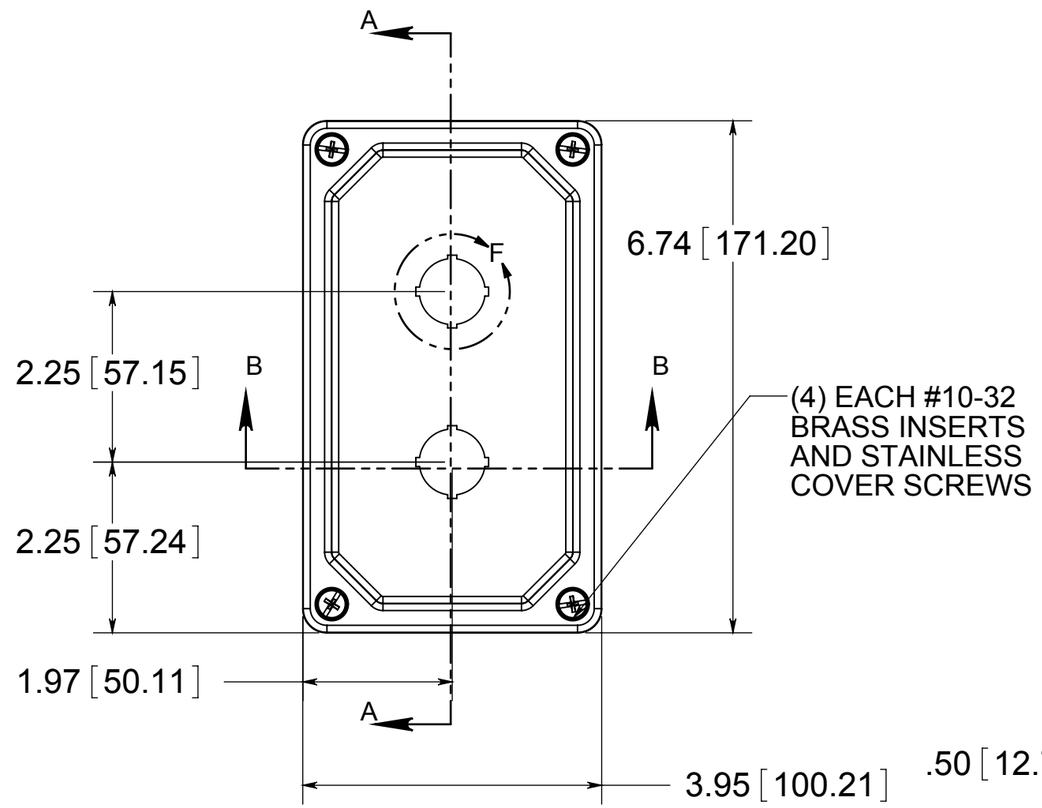

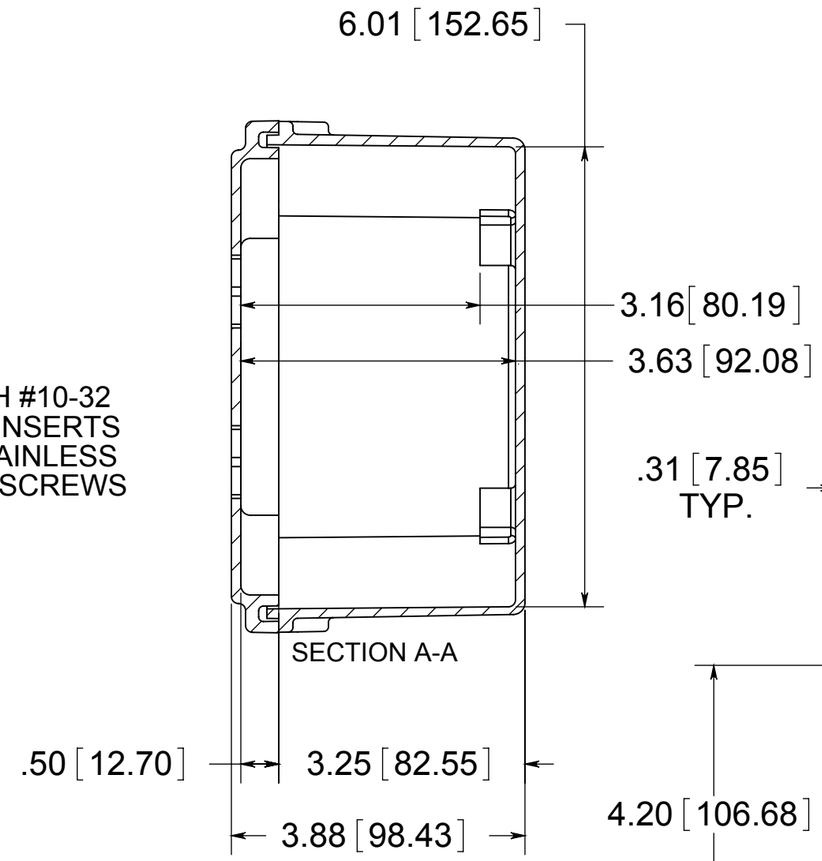

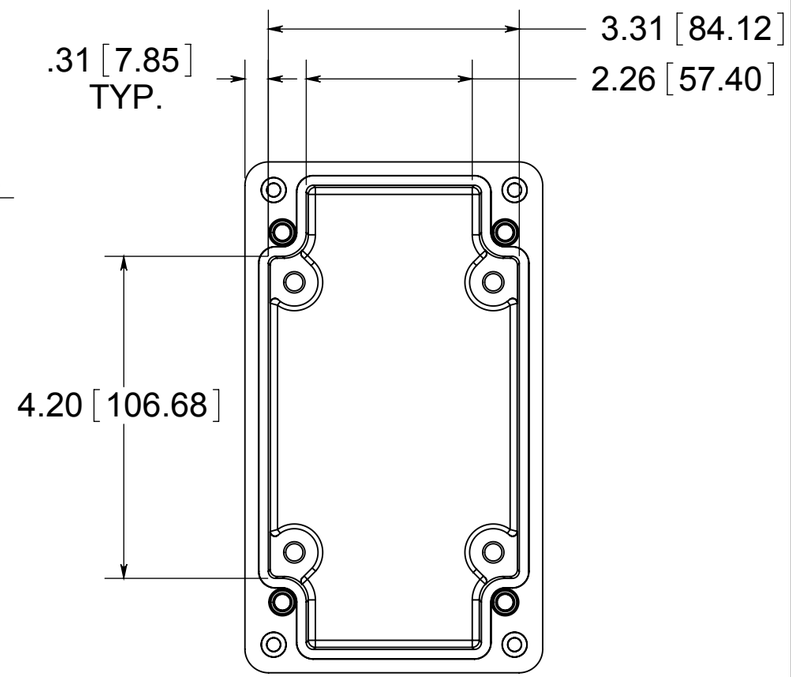

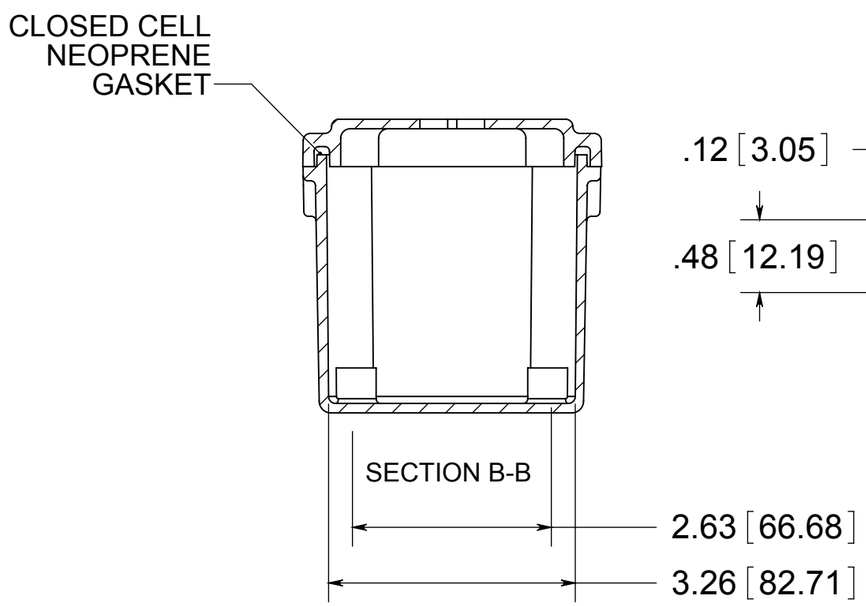

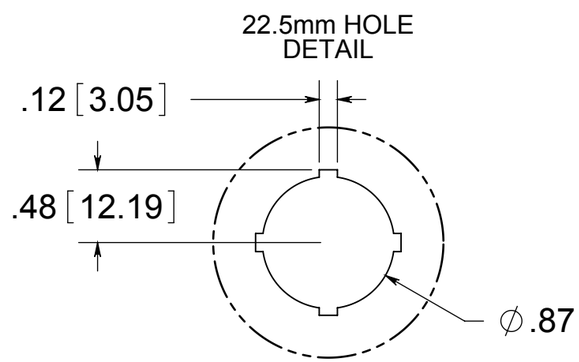

ALLIED MOULDED PRODUCTS
BRYAN, OHIO
The Original Fiber Glass Outlet Box

PRODUCT SERIES
AM2PB22

Part No.
AM2PB22

CONFIDENTIAL
THIS MATERIAL IS OWNED BY THE ALLIED MOULDED PRODUCTS COMPANY, IS DISCLOSED IN CONFIDENCE, AND IS NOT TO BE REPRODUCED OR DISTRIBUTED WITHOUT PRIOR WRITTEN PERMISSION FROM ALLIED MOULDED PRODUCTS.