Autonics

MEASURE COUNTER
FM SERIES

INSTRUCTION MANUAL

Thank you for choosing our Autonics product.
Please read the following safety considerations before use.

■ Safety Considerations

※Please observe all safety considerations for safe and proper product operation to avoid hazards.
※⚠ symbol represents caution due to special circumstances in which hazards may occur.

⚠ **Warning** Failure to follow these instructions may result in serious injury or death.
⚠ **Caution** Failure to follow these instructions may result in personal injury or product damage.

⚠ Warning

1. **Fail-safe device must be installed when using the unit with machinery that may cause serious injury or substantial economic loss. (e.g. nuclear power control, medical equipment, ships, vehicles, railways, aircraft, combustion apparatus, safety equipment, crime/disaster prevention devices, etc.)**
   Failure to follow this instruction may result in fire, personal injury, or economic loss.
2. **Install on a device panel to use.**
   Failure to follow this instruction may result in electric shock or fire.
3. **Do not connect, repair, or inspect the unit while connected to a power source.**
   Failure to follow this instruction may result in electric shock or fire.
4. **Check 'Connections' before wiring.**
   Failure to follow this instruction may result in fire.
5. **Do not disassemble or modify the unit.**
   Failure to follow this instruction may result in electric shock or fire.

⚠ Caution

1. **When connecting the power/sensor input and relay output, use AWG 20(0.50mm²) cable or over, and tighten the terminal screw with a tightening torque of 0.74 to 0.90N·m.**
   Failure to follow this instruction may result in fire or malfunction due to contact failure.
2. **Use the unit within the rated specifications.**
   Failure to follow this instruction may result in fire or product damage.
3. **Use dry cloth to clean the unit, and do not use water or organic solvent.**
   Failure to follow this instruction may result in electric shock or fire.
4. **Do not use the unit in the place where flammable/explosive/corrosive gas, humidity, direct sunlight, radiant heat, vibration, impact, or salinity may be present.**
   Failure to follow this instruction may result in fire or explosion.
5. **Keep metal chip, dust, and wire residue from flowing into the unit.**
   Failure to follow this instruction may result in fire or product damage.

■ Dimensions

(unit: mm)

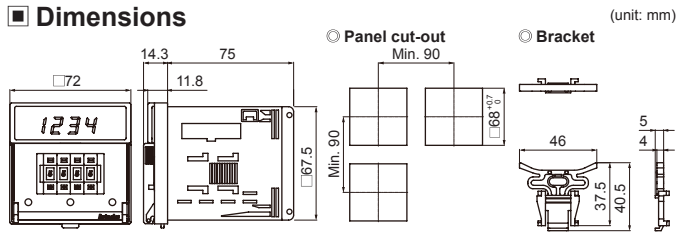

■ Counting Operation for Indicator (FM□M-I4)

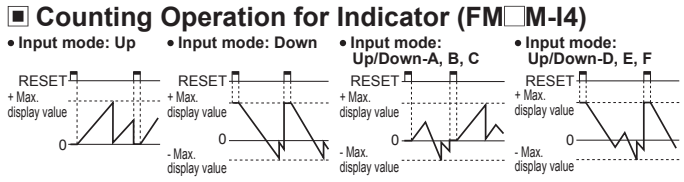

※- display is only for F, K, Q, S output operation mode and it cannot be set.

■ Input Operation Mode

※CP: Clock Pulse

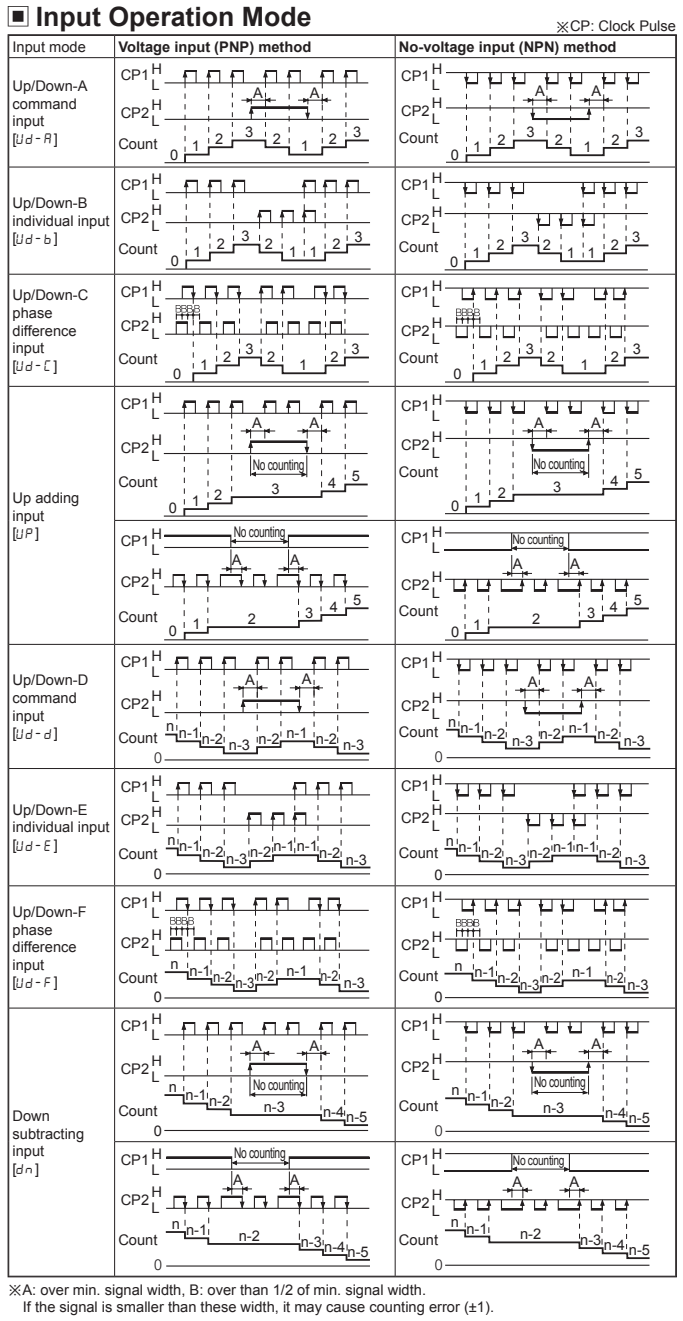

※A: over min. signal width, B: over than 1/2 of min. signal width.
If the signal is smaller than these width, it may cause counting error (±1).

※The above specifications are subject to change and some models may be discontinued without notice.
※Be sure to follow cautions written in the instruction manual and the technical descriptions (catalog, homepage).

■ Specifications

Model	1-stage setting	**FM4M-1P4**	**FM6M-1P4**
	2-stage setting	**FM4M-2P4**	**FM6M-2P4**
	Indicator	**FM4M-I4**	**FM6M-I4**
Display digit		4-digit	6-digit
Character size (W×H)		6×10mm	4×8mm
Power supply		100-240VAC~ 50/60Hz	
Permissible voltage range		90 to 110% of rated voltage	
Power consumption		●1-stage: max. 4.6VA ●2-stage: max. 5.8VA ●Indicator: max. 3.8VA	
Max. counting speed of CP1/CP2		Selectable 1cps/30cps/300cps/2kcps/5kcps	
Return time		Max. 500ms	
Min. signal width		RESET: approx. 20ms	
Input method		Selectable voltage input (PNP) method or no-voltage input (NPN) method [Voltage input (PNP) method]-input impedance: max. 10.8kΩ, [H]: 5-30VDC⎓, [L]: 0-2VDC [No-voltage input (NPN) method]-short-circuit impedance: max. 470Ω, short-circuit residual voltage: max. 1VDC, open-circuit impedance: min. 100kΩ	
One-shot output time		0.01 to 99.99 sec	
Control output	Contact: Type	●1-stage: Instantaneous SPDT (1c) ●2-stage: OUT1-Instantaneous SPST (1a), OUT2-Instantaneous SPST (1a)	
	Contact: Capacity	250VAC~ 3A, 30VDC⎓ 3A resistive load	
	Solid state: Type	●1-stage: 1 NPN open collector ●2-stage: OUT1-1 NPN open collector, OUT2-1 NPN open collector	
	Solid state: Capacity	NPN open collector output ●Load voltage: max. 30VDC⎓ ●Load current: max. 100mA ●Residual voltage: max. 1VDC⎓	
Relay life cycle	Mechanical	Min. 5,000,000 operations	
	Electrical	Min. 100,000 operations (250VAC 3A resistive load)	
Insulation resistance		Over 100MΩ (at 500VDC megger)	
External power supply		Max. 12VDC⎓ ±10% 50mA	
Memory retention		Approx. 10 years (non-volatile memory)	
Dielectric strength		2,000VAC 50/60Hz for 1 min (between all terminals and case)	
Noise immunity		±2kV the square wave noise (pulse width 1μs) by noise simulator	
Vibration	Mechanical	0.75mm amplitude at frequency 10 to 55Hz (for 1 min) in each X, Y, Z direction for 1 hour	
	Malfunction	0.5mm amplitude at frequency 10 to 55Hz (for 1 min) in each X, Y, Z direction for 10 minutes	
Shock	Mechanical	300m/s² (approx. 30G) in each X, Y, Z direction for 3 times	
	Malfunction	100m/s² (approx. 10G) in each X, Y, Z direction for 3 times	
Environment	Ambient temp.	-10 to 55℃, storage: -25 to 65℃	
	Ambient humi.	35 to 85%RH, storage: 35 to 85%RH	
Protection structure		IP20 (front part, IEC standard)	
Approval		CE c UL us	
Weight※1	1-stage setting	Approx. 245g (approx. 180g)	
	2-stage setting	Approx. 265g (approx. 200g)	
	Indicator	Approx. 225g (approx. 160g)	

※1: The weight includes packaging. The weight in parenthesis is for unit only.
※Environment resistance is rated at no freezing or condensation.

■ Connections

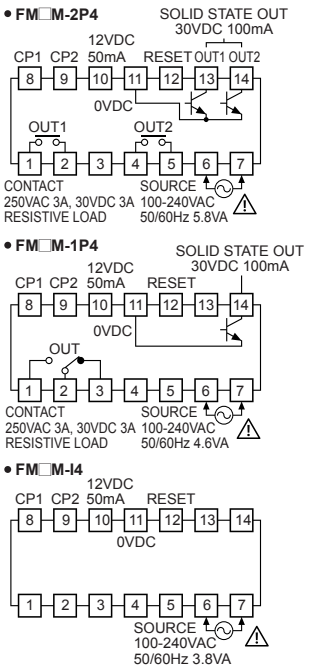

■ Example of Input/Output Connection

◎ **When operating load by sensor power**

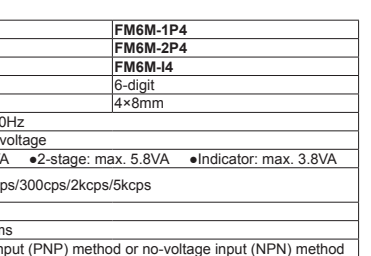

※The sum of operating current capacity of load 1 and sensor should not be over external power capacity (50mA).

◎ **When operating load by external power**

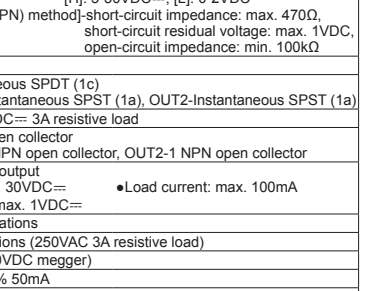

●The capacity of load 1 should not be over transistor switching capacity (max. 30VDC 100mA).
●Do not supply the reverse polarity power.
※When using inductive load (relay, etc.), connect surge absorbers at both ends of load 1.

■ Output Operation Mode

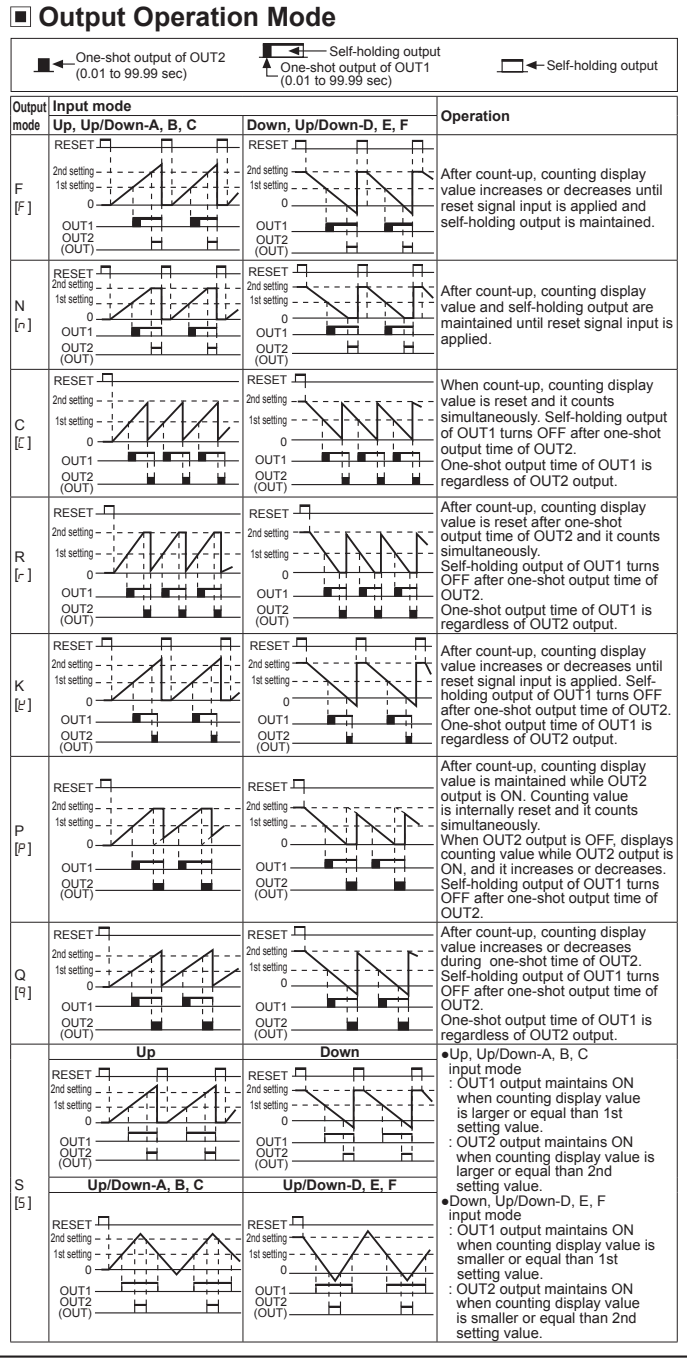

■ Parameter Setting

※Hold the MODE key for 3 sec to save the setting value and return to RUN mode after changing the setting value.
※If there is no key input for 60 sec while setting the parameters, the new settings are ignored, and the unit returns to RUN mode with previous settings.
※Press the ⊲, ⊳ keys to select or set the desired value. Press the MODE key once after changing the setting value, to save the setting value and move to the next parameter.
※The dotted line parameters may not appear depending on output specifications or other parameter settings.
※1: Each parameter and corresponding setting value will flash alternately every 0.5 sec.

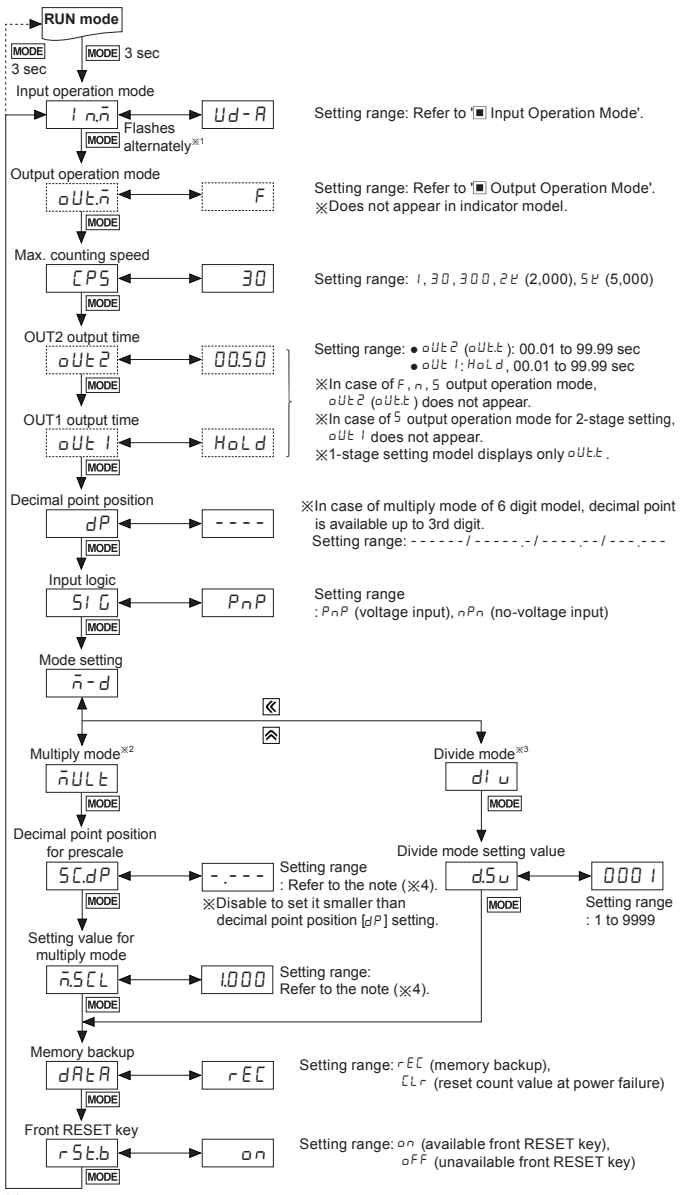

※2: Multiply mode [nULt]: Displayed by multiplying input signal and setting value.
Input signal×Setting value=Display value (input signal: 1, setting value: 4, it displays 4 (1×4))
※3: Divide mode [div]: Displays 1 when input signals are input as the setting value.
Input signal/Setting value=Display value (input signal: 4, setting value: 4, it displays 1 (4/4))
※4:

Decimal point position [dP]	Prescale decimal point position [SC.dP]	Setting value for multiply mode [n.SCL]
----	----/---.-/--.--/-.---	0.001 to 9999
---.-	---.-/--.--/-.---	0.001 to 999.9
--.--	--.--/-.---	0.001 to 99.99
-.---	-.---	0.001 to 9.999

■ Input Connection

◎ **Voltage input (PNP)**
• Solid state input (standard sensor: PNP output type sensor)

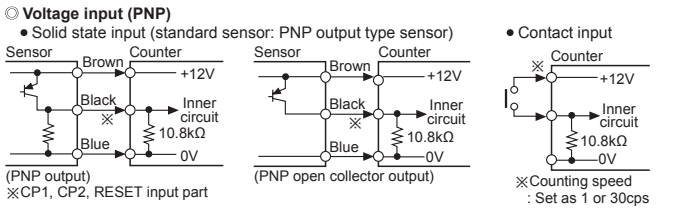

◎ **No-voltage input (NPN)**
• Solid state input (standard sensor: NPN output type sensor)

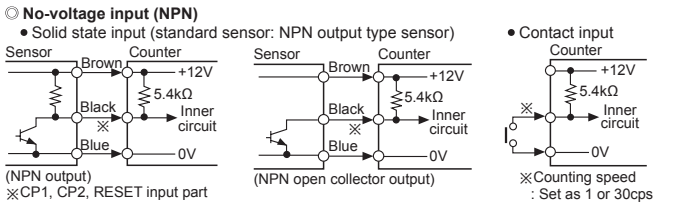

■ Factory Default

Parameter	Default	Parameter	Default	Parameter	Default	Parameter	Default
In.n	Ud-A	oUt2	00.50	SIG	PnP	n.SCL	1.000
oUt.n	F	oUt1	HoLd	n-d	nULt	dAtA	rEC
CPS	30	dP	----	SC.dP	-.---	rSt.b	on

■ Error Display and Output Operation

Error Display	Error description	Troubleshooting
Err0	Setting value is 0.	Change the setting value anything but 0.

※When error occurs, the output turns OFF.
※When 1st setting value is set as 0 (zero), OUT1 maintains OFF.
When 2nd setting value is smaller than 1st setting value, 1st setting value is ignored and only OUT2 output operates.
※Indicator model does not have error display function.

■ Cautions during Use

1. Follow instructions in 'Cautions during Use'. Otherwise, it may cause unexpected accidents.
2. Use the product, 0.1 sec after supplying power.
3. When supplying or turning off the power, use a switch or etc. to avoid chattering.
4. Install a power switch or circuit breaker in the easily accessible place for supplying or disconnecting the power.
5. In case of contact input, set count speed to low speed mode (1cps or 30 cps) to operate. If set to high speed mode (300cps, 2kcps, 5kcps), counting error occurs due to chattering.
6. Keep away from high voltage lines or power lines to prevent inductive noise.
   In case installing power line and input signal line closely, use line filter or varistor at power line and shielded wire at input signal line.
   Do not use near the equipment which generates strong magnetic force or high frequency noise.
7. This product may be used in the following environments.
   ①Indoors (in the environment condition rated in 'Specifications')
   ②Altitude max. 2,000m
   ③Pollution degree 2
   ④Installation category II

■ Major Products

■ Photoelectric Sensors
■ Fiber Optic Sensors
■ Door Sensors
■ Door Side Sensors
■ Area Sensors
■ Proximity Sensors
■ Pressure Sensors
■ Rotary Encoders
■ Connector/Sockets
■ Switching Mode Power Supplies
■ Control Switches/Lamps/Buzzers
■ I/O Terminal Blocks & Cables
■ Stepper Motors/Drivers/Motion Controllers
■ Graphic/Logic Panels
■ Field Network Devices
■ Laser Marking System (Fiber, Co₂, Nd: YAG)
■ Laser Welding/Cutting System
■ Temperature Controllers
■ Temperature/Humidity Transducers
■ SSR/Power Controllers
■ Counters
■ Timers
■ Panel Meters
■ Tachometer/Pulse (Rate) Meters
■ Display Units
■ Sensor Controllers

Autonics Corporation
http://www.autonics.com
■ HEAD QUARTERS:
18, Bansong-ro 513 beon-gil, Haeundae-gu, Busan, South Korea, 48002
TEL: 82-51-519-3232
■ E-mail: sales@autonics.com