www.aver.com

Ceiling Mount Kit

Quick Installation Guide

Package Contents

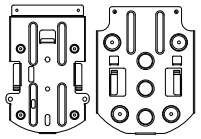

Ceiling mount bracket(x2)

1/4”-20L=6.5mm Screw(x1)

M3 x 6mm Screw(x3)

Dimensions

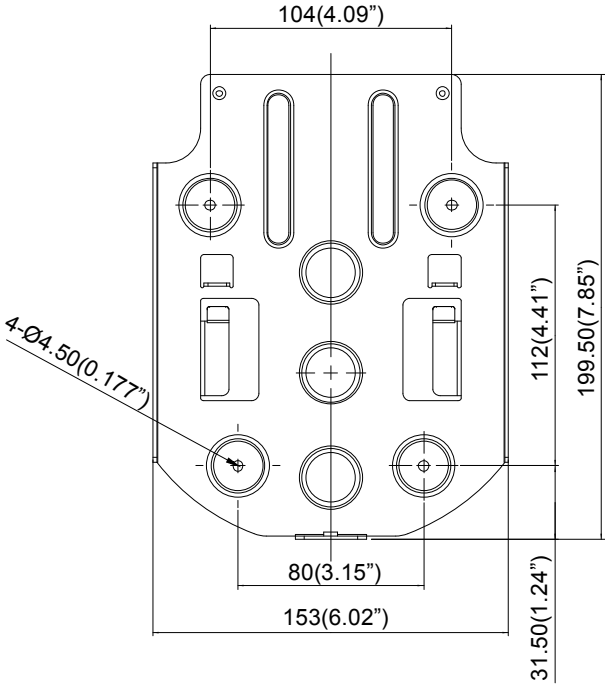

Ceiling installation

1. Secure the mount bracket on the ceiling.
   Screw: 4 screws, M4 x 10mm(Not Included in the package)

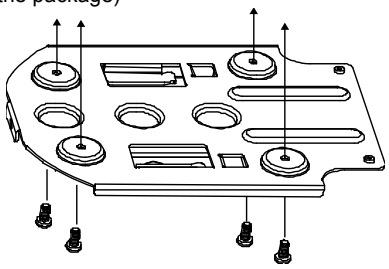

2. Install the mount bracket on the camera.
   Screw: 1 screw , 1/4"-20 L=6.5mm(Included in the package)

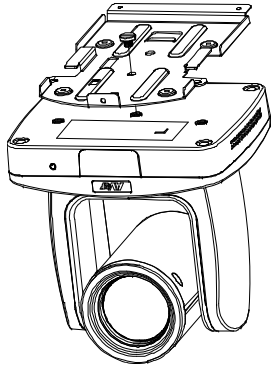

3. Slide the mount bracket with the camera into the mount bracket which secured on the ceiling.

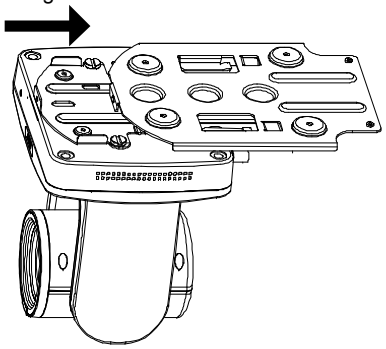

[Note] Connects necessary cables after sliding the camera into the mount bracket.

4. Secure the camera with screws.
   Screw: 3 screws, M3 x 6mm(Included in the package)

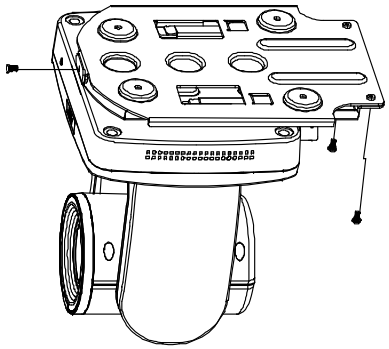

©2020 AVer Information Inc. All rights reserved.