PART NAME	MOUNTING BRACKET	PART No.	MB-14273	REV. DATE	9-1-15

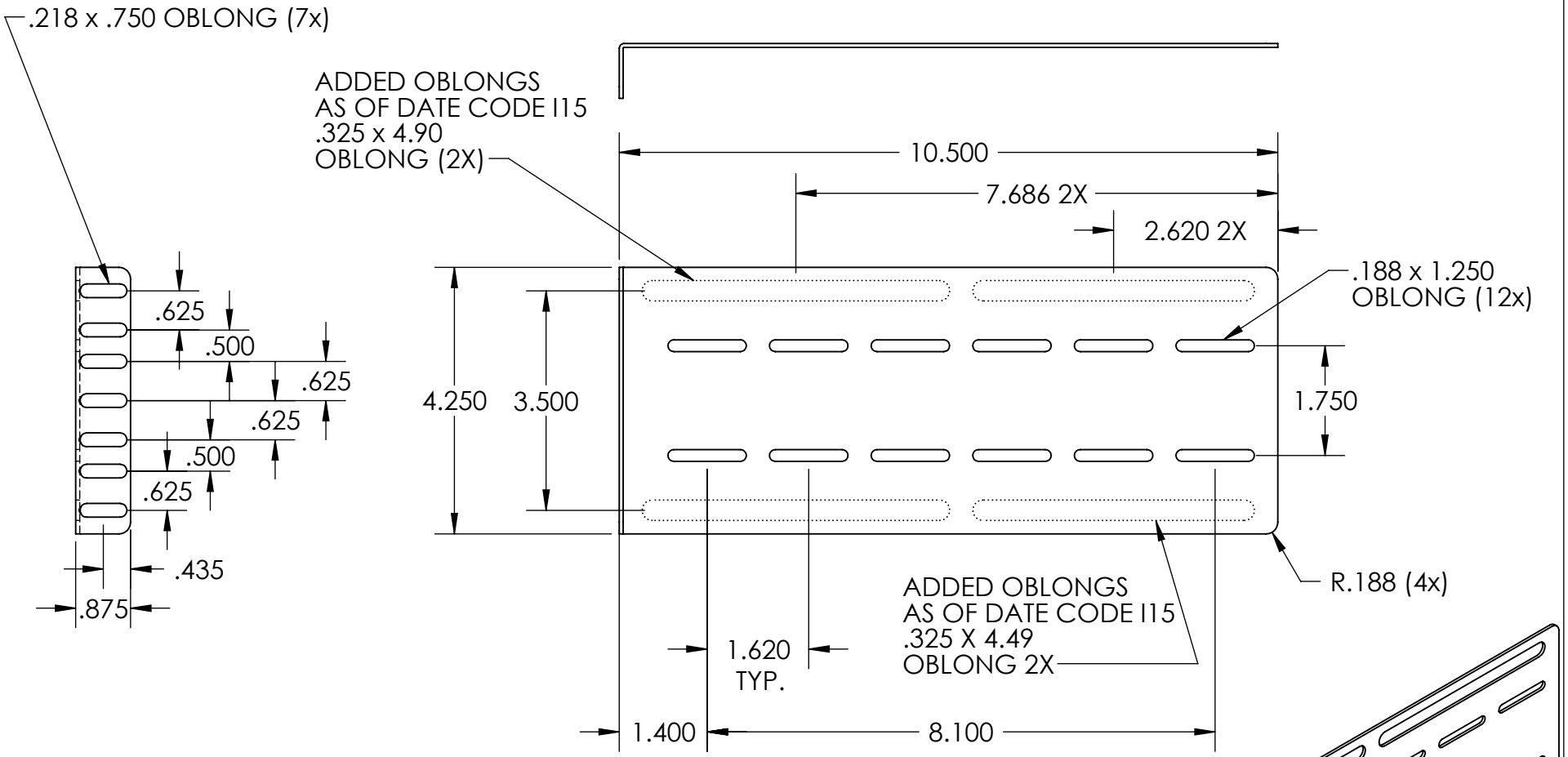

MATERIAL - 16 GA. STEEL

FINISH - SMOOTH BLACK POWDERCOAT
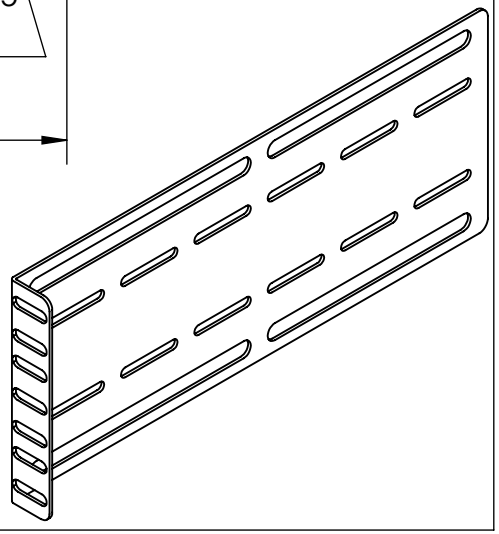
QTY. (2) MOUNTING BRACKETS
AND NECESSARY HARDWARE