REV.	DATE	DESCRIPTION	ECO	BY	C'H'K.
C	2018-08-27 00:00:00 EDT	UPDATED AS PER MRKUP --	49728	RS	RM

*** BILL OF MATERIAL ***

PT NO.	CATALOG NO.	QTY	DESCRIPTION
1	PATCASELI	1	CASE, TOOL PATRIOT LITHIUM-ION
2	BATI8VLI	2	BATTERY, LITHIUM ION I8V
3	PATCHGRLI	1	CHARGER, BATTERY LITHIUM ION
4	BATCHGRLIOMI	1	BATTERY CHARGER SAFETY OPERATING MAINTENANCE & INSTRUCTIONS
5	PT208620	1	LANYARD
6	PAT600LIOMI	1	SOMI, PAT600LI
7	PT20443801	1	FIVE YEAR WARRANTY CARD
8	LIMSDS	1	MSDS, LITIUM-ION BATTERY

CATALOG NUMBER	DESCRIPTION	CHARGER CATALOG NO.
PAT600-LI	PATRIOT® 600 WITH I20V CHARGER	PATCHGRLI
PAT600-LIDC	PATRIOT® 600 WITH I2V CHARGER	PATCHGRLIDC
PAT600C-LI	PATRIOT® 600 COVERED HEAD WITH I20V CHARGER	PATCHGRLI

SPECIFICATIONS:

OUTPUT FORCE: 6 TONS (5.4 METRIC TONS)
TOOL WEIGHT WITH BATTERY: I0.1 LBS (4.5 kg)
LENGTH: I4.5 IN (36.8 cm)
WIDTH: 3.5 IN (8.9 cm)
HEIGHT: I3.7 IN (34.9 cm)
OPERATING VOLTAGE: I8V-DC
RECHARGE TIME: 30 MINUTES

FOR USE ON:

COPPER: #8 - 600 kcmil	TERMINALS: YA, YA-L SPLICES: YS, YS-L, YS-T, YS-R
COPPER FLEX: #8 - 350 kcmil	TERMINALS: YA-FX, YAV, YA-L-FX SPLICES: YS, YSV-FXB
ALUMINUM: #8 - 350 kcmil	TERMINALS: YA-A, YA-A-TN SPLICES: YS-A

FEATURES AND BENEFITS

- REFINED HYDRAULIC SYSTEM FOR ULTRA PERFOMANCE, SPEED AND RELIABILITY.
- FIELD PROVEN ELECTRONICS FOR ULTIMATE RELIABILITY IN THE HARSHEST ENVIRONMENTS.
- OVERMOLDED HANDLE FOR COMFORT AND IMPROVED GRIP; ALLOWS FOR ONE HANDED OPERATION FOR ADVANCE RETRACT AND HOLD.
- MAKITA I8 VOLT LITHIUM-ION BATTERIES PROVIDE 2.5 TIMES MORE CHARGE/DISCHARGE CYCLES THAN TRADITIONAL Ni-Cd BATTERIES AND PROVIDE 430% MORE LIFETIME WORK.
- MAKITA 30 MINUTE CHARGER CONTROLS CURRENT, VOLTAGE AMD TEMPERATURE TO MAXIMIZE BATTERY LIFE.
- FORCED AIR COOLING FAN COOLS THE BATTERY BY FORCING COOL AIR THROUGH THE BATTERY'S BUILT IN AIR VENTS.
- SPECIALIZED LATCH HEAD DESIGN ALLOWS INTERFERENCE FREE CLOSURE ON TAP CONNECTORS.
- PERMANENT "D3" CRIMP GROOVE ACCEPTS "W", "X" AND "W-VT" DIES.
- PAT600C-LI WITH COVERED HEAD IS AVAILABLE.
- STATE OF THE ART CRIMPING HEAD DESIGN, I80° HEAD ROTATION LETS USER GET INTO TIGHT AREAS EASIER.
- ERGONOMICALLY BALANCED TOOL DESIGN EASES OPERATION AND HELPS LESSEN FATIGUE.
- DURABLE HIGH IMPACT FORMED CARRYING CASE PROVIDES SUPERIOR PROTECTION AND STORES ALL ACCESSORIES.
- 5 YEAR LIMITED WARRANTY ON THE TOOL.
- LIFETIME WARRANTY ON INFINITY DRIVE®.
- 3 YEAR LIMITED WARRANTY ON THE BATTERIES AND CHARGER.

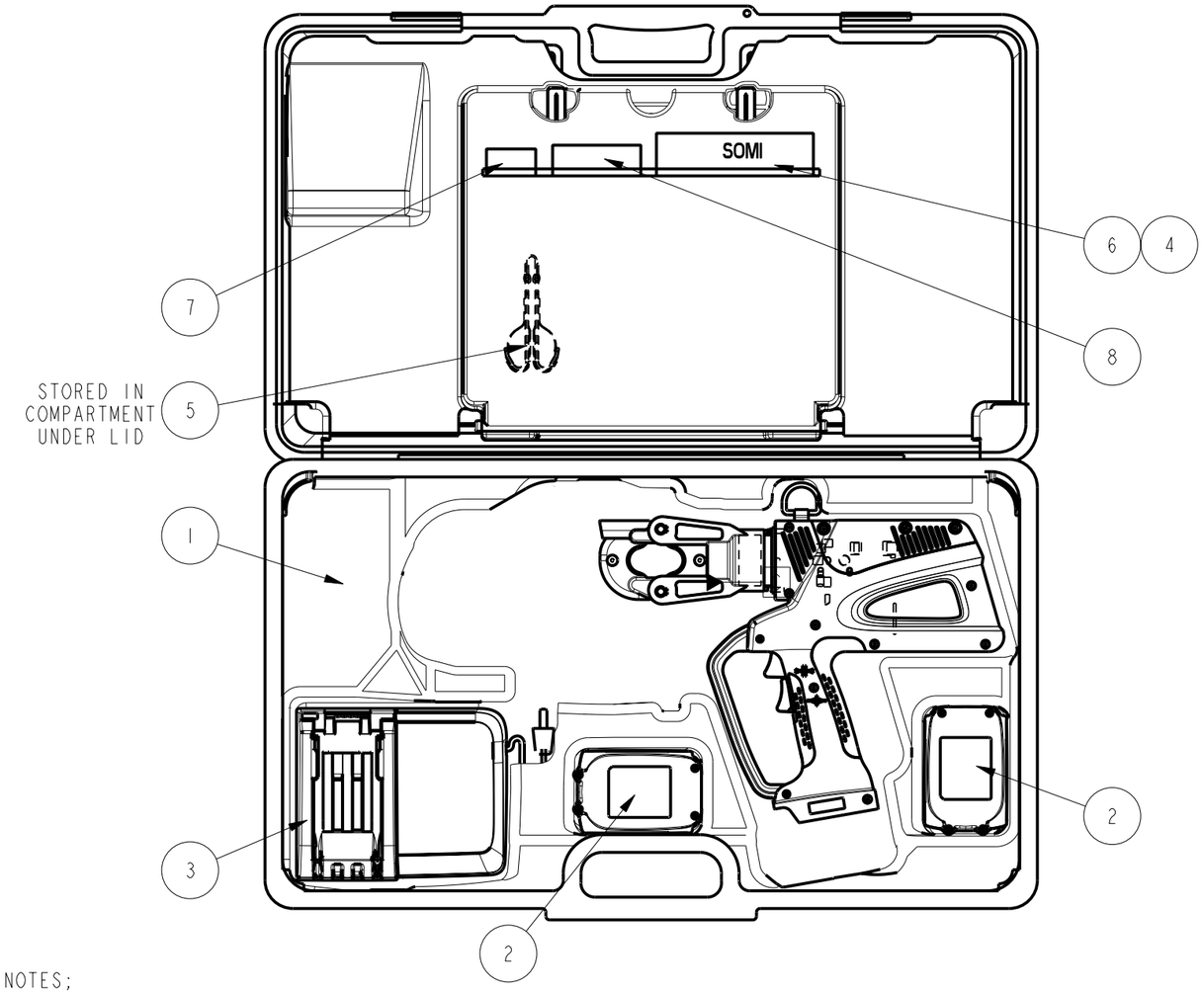

NOTES;

1. TOOL ACCEPTS I8V MAKITA LITHIUM ION BATTERIES, BL SERIES OF SIZE 2.0 AHR AND GREATER IF THE PLASTIC BATTERY CLIP IN THE TOOL HAS A "STAR" MOLDED INTO IT. THE "STAR" IDENTIFIES ACCEPTANCE OF THE BL SERIES BATTERIES

2. FOR TOOLS WHICH DO NOT HAVE A "STAR" MOLDED INTO THE PLASTIC BATTERY CLIP,USE IS LIMITED TO THE BL I830 (3.0 AHR) BATTERY. FORCING ANY OTHER BATTERY INTO THIS TOOL WILL VOID THE WARRANTY.

TO ORDER BURNDY® PRODUCTS CALL

UNITED STATES:
I-800-346-4I75 (LONDONDERRY, NH)

CANADA:
I-800-36I-6975 (QUEBEC)
I-800-387-6487 (ALL OTHER PROVINCES)

FOR PRODUCT INFO: http://www.burndy.com

PATRIOT® 6 TON BATTERY CRIMPING TOOL

ITEM NO: 30001987
CAT. NO: DRAWASMS

DRAWN BY:	T. FAUCHER	06/30/2010
CHECKER:	M. CHIASSON	II/05/2010
DSN APPVL:	M. CHIASSON	II/05/2010
MFG APPVL:	S. GONYAW	II/I0/2010
QA APPVL:	J. BRODEUR	II/05/2010
MKT APPVL:	R. POIRIER	II/05/2010

BURNDY

SCALE: I:4

PROD FAM: TOOLS, BATTERY		DRAWING NO	REV
PROJECT #: I4074	SIZE	30001989	C
DOCUMENT TYPE: Sales	B		
REL LEVEL: Released		SHEET I OF I	

REV: PE0200