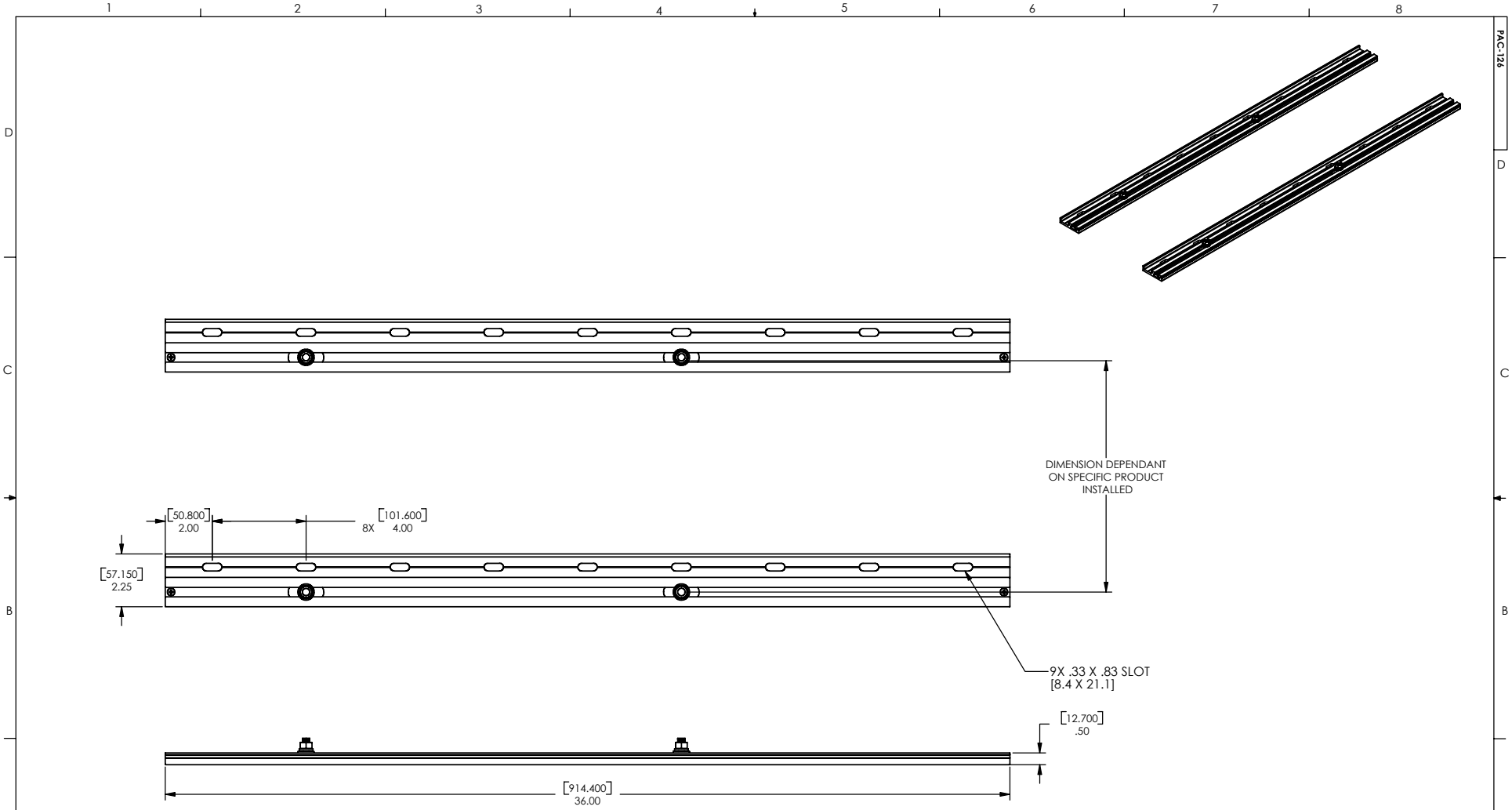

CHIEF MANUFACTURING INC.
ORDER NUMBER IS PAC-126
PHONE: 1-800-582-6480

THE INFORMATION AND DESIGNS CONTAINED IN THIS DRAWING ARE CONFIDENTIAL AND THE PROPRIETARY PROPERTY OF CHIEF MFG., INC. NEITHER THIS DESIGN NOR ANY INFORMATION CONTAINED IN THIS DRAWING MAY BE REPRODUCED OR DISCLOSED TO OTHERS WITHOUT THE EXPRESS WRITTEN CONSENT OF CHIEF MFG., INC.

CHIEF MANUFACTURING, INC
12800 HWY 13 SOUTH STE. 500 * SAVAGE, MN 55378
1.800.582.6480 * fax 1.877.894.6918

TITLE
CUSTOMER PRINT
PLASMA LATERIAL SHIFT
PAC-126

SIZE **B** DWG. NO. **PAC-126**

PAC-126