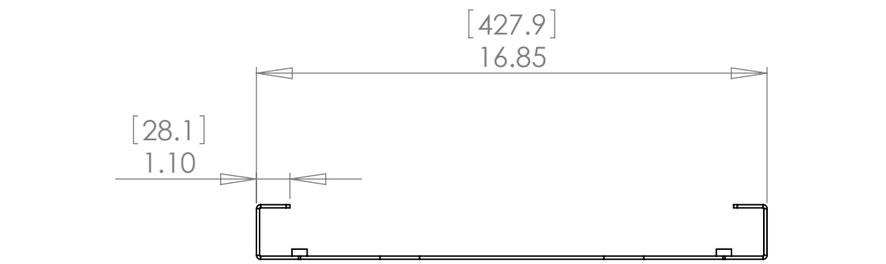

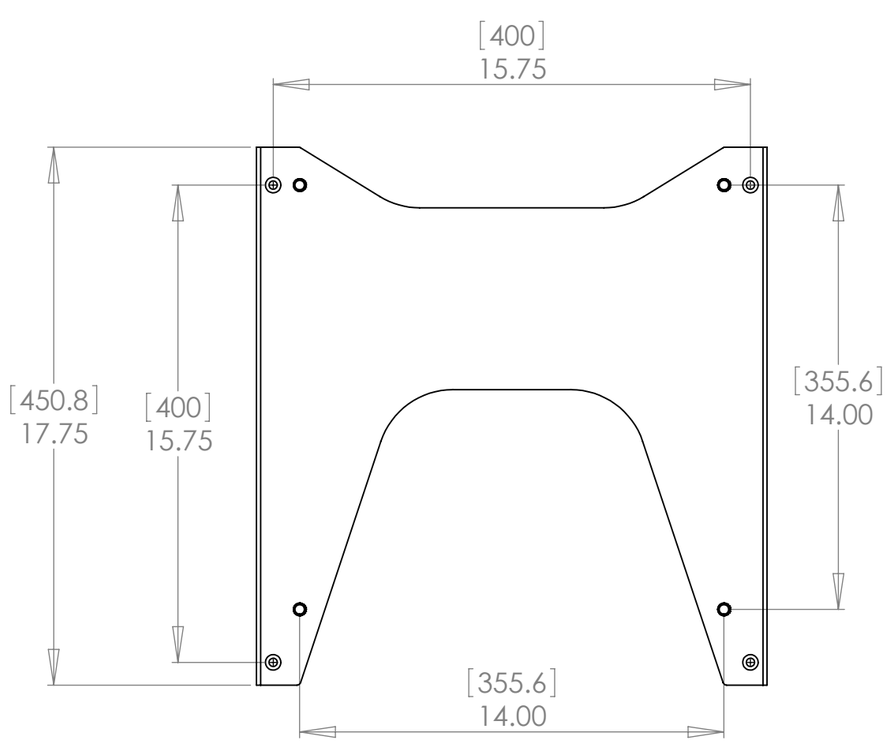

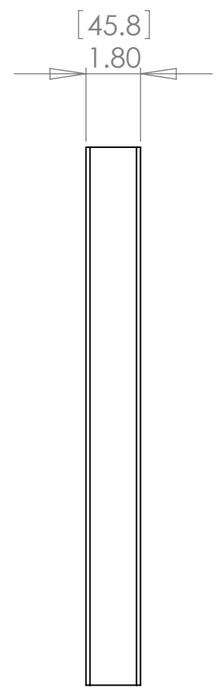

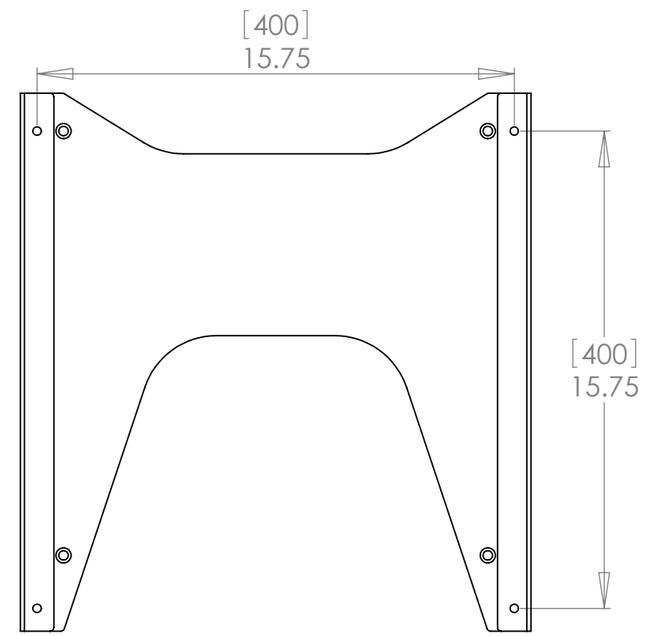

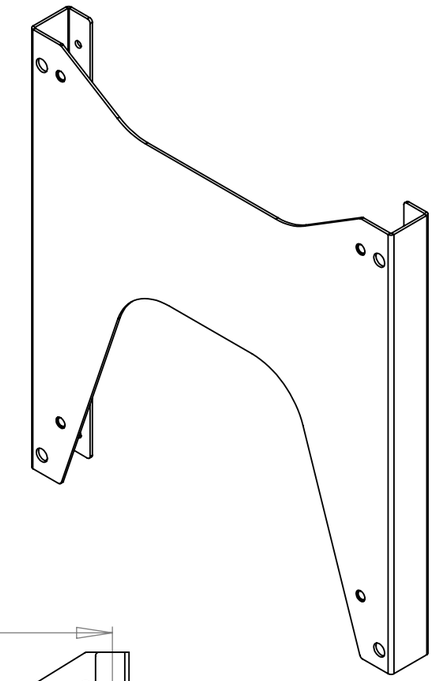

PSB2203

CHIEF MANUFACTURING INC.
MOUNT ORDER NUMBER IS PSB2203
PHONE: 1-800-582-6480

SHEET SCALE = 1:5

THE INFORMATION AND DESIGNS CONTAINED IN THIS DRAWING ARE CONFIDENTIAL AND THE PROPRIETARY PROPERTY OF CHIEF MFG., INC. NEITHER THIS DESIGN NOR ANY INFORMATION CONTAINED IN THIS DRAWING MAY BE REPRODUCED OR DISCLOSED TO OTHERS WITHOUT THE EXPRESS WRITTEN CONSENT OF CHIEF MFG., INC.

CHIEF
8401 EAGLE CREEK PKY
SUITE #700
SAVAGE, MN 55378
PHONE: 952-894-6280
FAX: 877-894-6918

TITLE
CUSTOMER PRINT PSB2203

SIZE B | DWG. NO. PSB2203