■ Schematic Diagrams

CAUTION

Fuse of the specified parts number must be used.
Unauthorized substitutions may result in fire or accident.

Touchboards
205 Westwood Ave, Long Branch, NJ 07740
Phone: 866-94 BOARDS (26273) / (732)-222-1511
Fax: (732)-222-7088 | E-mail: sales@touchboards.com

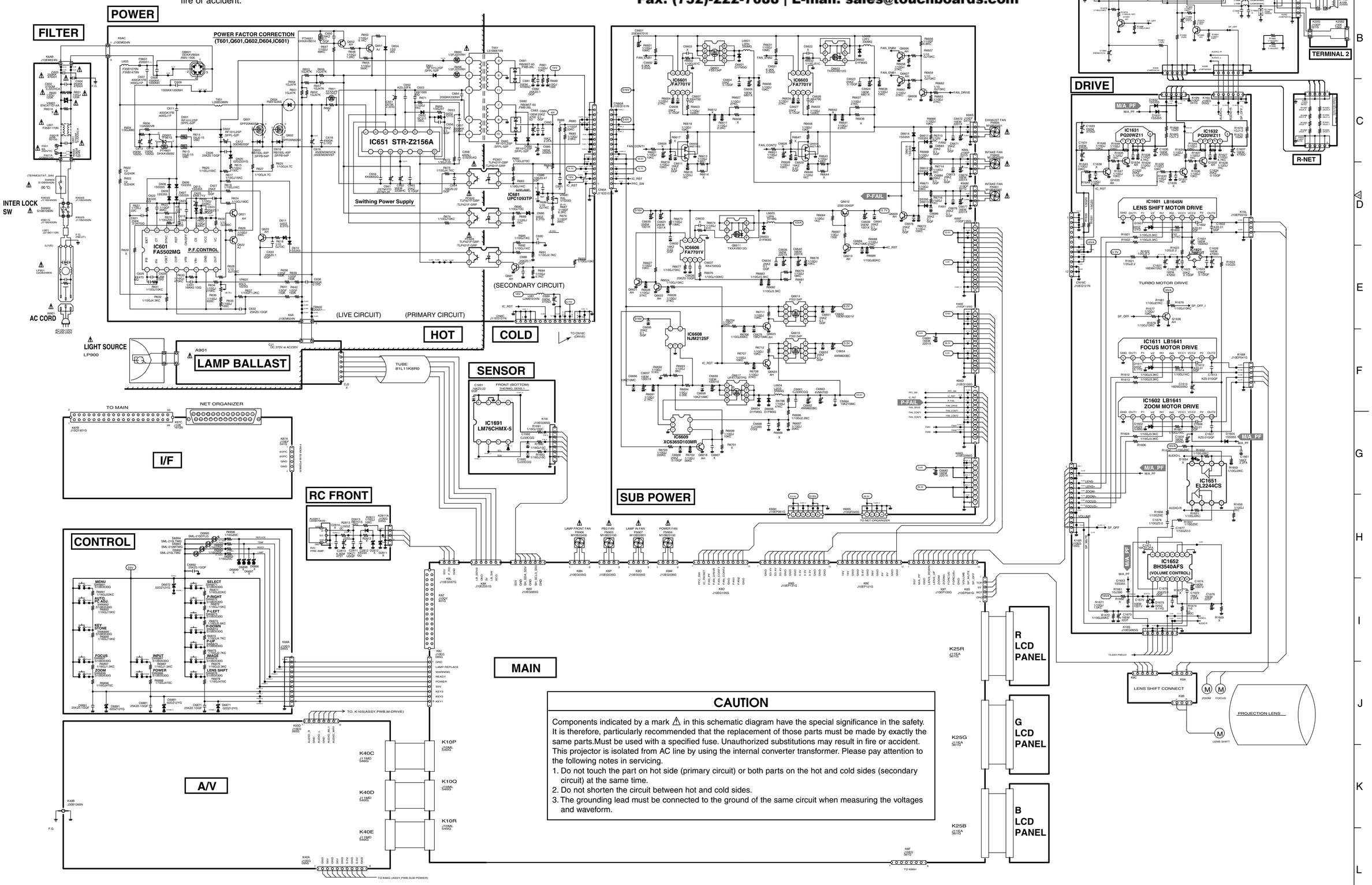

CAUTION

Components indicated by a mark ⚠ in this schematic diagram have the special significance in the safety. It is therefore, particularly recommended that the replacement of those parts must be made by exactly the same parts.Must be used with a specified fuse. Unauthorized substitutions may result in fire or accident. This projector is isolated from AC line by using the internal converter transformer. Please pay attention to the following notes in servicing.

1. Do not touch the part on hot side (primary circuit) or both parts on the hot and cold sides (secondary circuit) at the same time.
2. Do not shorten the circuit between hot and cold sides.
3. The grounding lead must be connected to the ground of the same circuit when measuring the voltages and waveform.

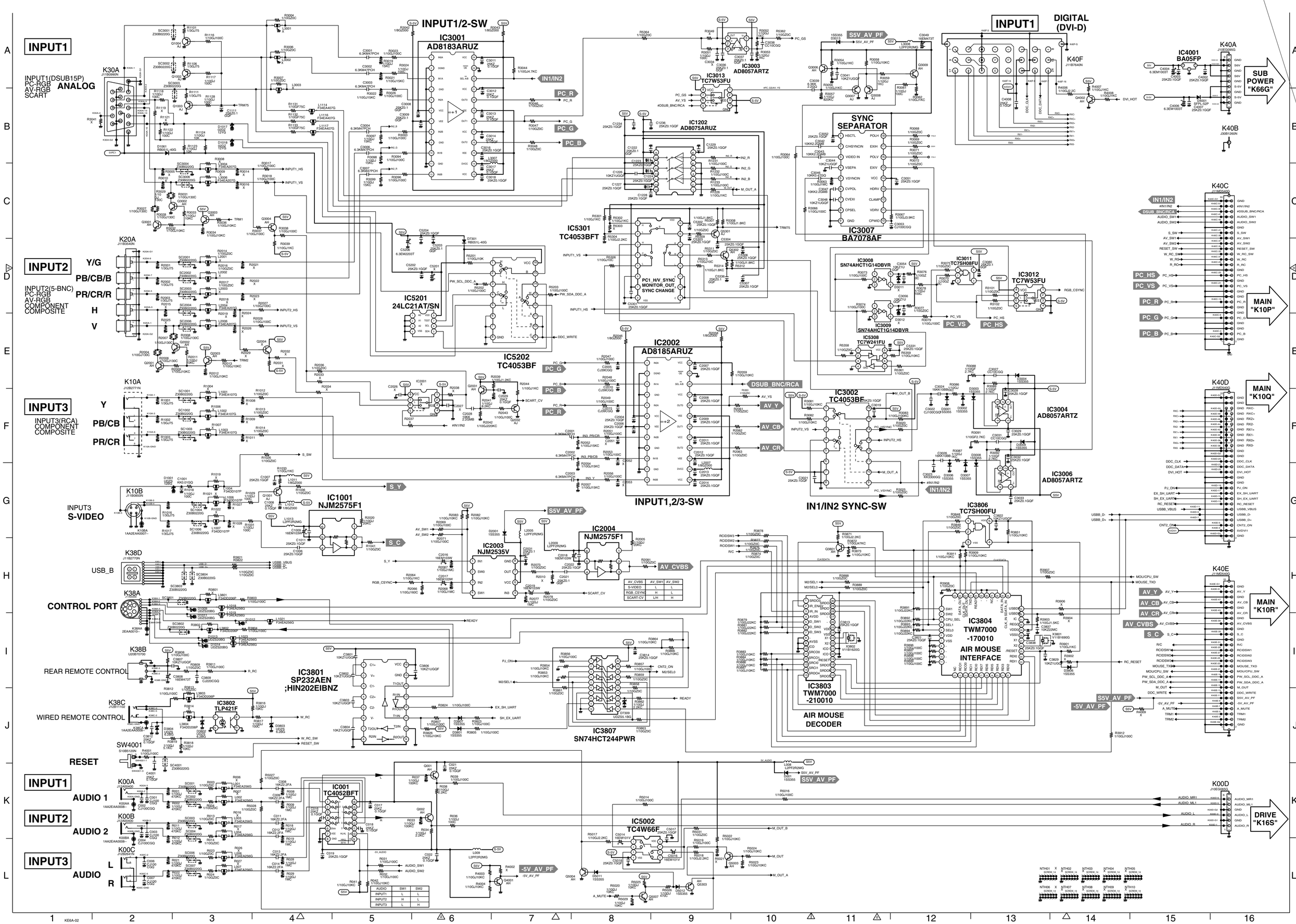
INPUT1
INPUT1(DSUB15P)
PC-RGB
AV-RGB
SCART
ANALOG
K30A
INPUT2
INPUT2(5-BNC)
PC-RGB
AV-RGB
COMPONENT
COMPOSITE
Y/G
PB/CB/B
PR/CR/R
H
V
K20A
INPUT3
INPUT3(RCA)
COMPONENT
COMPOSITE
Y
PB/CB
PR/CR
K10A
INPUT3
S-VIDEO
K10B
USB_B
K38D
CONTROL PORT
K38A
REAR REMOTE CONTROL
K38B
WIRED REMOTE CONTROL
K38C
RESET
SW4001
INPUT1
AUDIO 1
K00A
INPUT2
AUDIO 2
K00B
INPUT3
AUDIO
K00C
L
R
INPUT1/2-SW
IC3001
AD8183ARUZ
IN1/IN2
PC_R
PC_G
PC_B
IC3013
TC7W53FU
IC3003
AD8057ARTZ
IC1202
AD8075ARUZ
IC5301
TC4053BFT
PC1_H/V_SYNC
MONITOR_OUT,
SYNC CHANGE
IC5201
24LC21AT/SN
IC5202
TC4053BF
IC2002
AD8185ARUZ
DSUB_BNC/RCA
AV_Y
AV_CB
AV_CR
INPUT1,2/3-SW
IC1001
NJM2575F1
IC2003
NJM2535V
IC2004
NJM2575F1
AV_CVBS
S_Y
S_C
IC3801
SP232AEN
;HIN202EIBNZ
IC3802
TLP421F
IC3807
SN74HCT244PWR
IC001
TC4052BFT
IC5002
TC4W66F
-5V_AV_PF
S5V_AV_PF
INPUT1
DIGITAL
(DVI-D)
K40F
IC4001
BA05FP
K40A
SUB
POWER
"K66G"
K40B
SYNC
SEPARATOR
IC3007
BA7078AF
IC3008
SN74AHCT1G14DBVR
IC3011
TC7SH08FU
IC3012
TC7W53FU
IC3009
SN74AHCT1G14DBVR
IC5308
TC7W241FU
IC3002
TC4053BF
IN1/IN2 SYNC-SW
IC3004
AD8057ARTZ
IC3006
AD8057ARTZ
IC3806
TC7SH00FU
IC3804
TWM7000
-170010
AIR MOUSE
INTERFACE
IC3803
TWM7000
-210010
AIR MOUSE
DECODER
K40C
MAIN
"K10P"
K40D
MAIN
"K10Q"
K40E
MAIN
"K10R"
K00D
DRIVE
"K16S"
PC_HS
PC_VS
PC_R
PC_G
PC_B
DDC_CLK
DDC_DATA
DVI_HOT
AV_Y
AV_CB
AV_CR
AV_CVBS
S_C
-5V_AV_PF
S5V_AV_PF
A4
SCH_KE6B

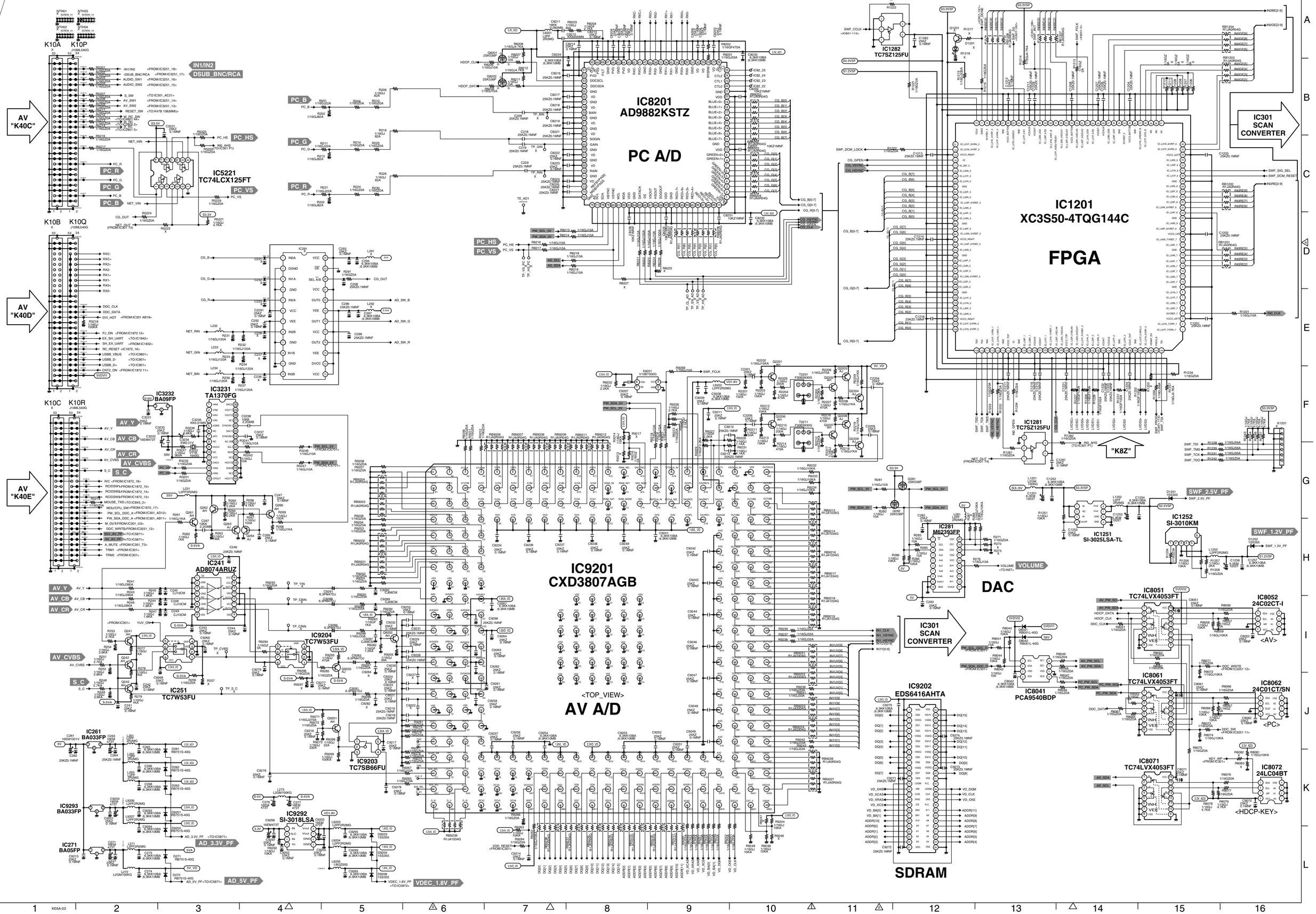
IN1/IN2
DSUB_BNC/RCA
AV "K40C"
IC5221
TC74LCX125FT
PC_HS
PC_R
PC_G
PC_B
PC_VS
IC8201
AD9882KSTZ
PC A/D
IC1282
TC7SZ125FU
IC301
SCAN
CONVERTER
IC1201
XC3S50-4TQG144C
FPGA
AV "K40D"
IC3232
BA09FP
IC3231
TA1370FG
AV_Y
AV_CB
AV_CR
AV_CVBS
S_C
AV "K40E"
IC241
AD8074ARUZ
IC9204
TC7W53FU
IC251
TC7W53FU
IC261
BA033FP
IC9293
BA033FP
IC271
BA05FP
IC9292
SI-3018LSA
IC9203
TC7SB66FU
AD_3.3V_PF
AD_5V_PF
VDEC_1.8V_PF
IC9201
CXD3807AGB
<TOP_VIEW>
AV A/D
IC1281
TC7SZ125FU
"K82"
IC281
M62393FP
VOLUME
DAC
IC1252
SI-3010KM
IC1251
SI-3025LSA-TL
SWF_2.5V_PF
SWF_1.2V_PF
IC9202
EDS6416AHTA
SDRAM
IC8051
TC74LVX4053FT
IC8052
24C02CT-I
<AV>
IC8041
PCA9540BDP
IC8061
TC74LVX4053FT
IC8062
24C01CT/SN
<PC>
IC8071
TC74LVX4053FT
IC8072
24LC04BT
<HDCP-KEY>

SCH_KE6B

A5

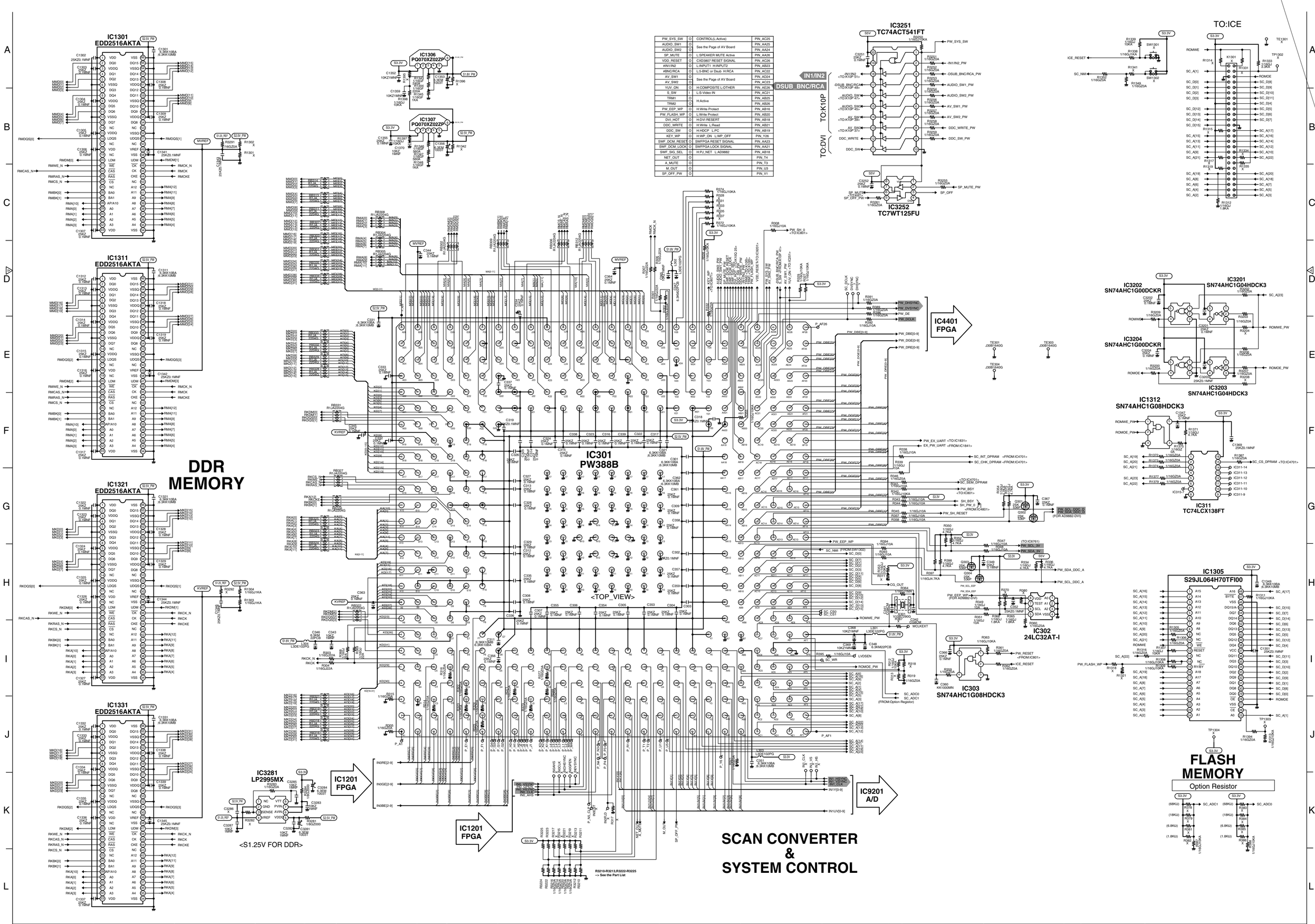

PW_SYS_SW	O	CONTROL(L:Active)	PIN_AC25
AUDIO_SW1	O	See the Page of AV Board	PIN_AA25
AUDIO_SW2	O		PIN_AA24
SP_MUTE	O	L:SPEAKER MUTE Active	PIN_AA26
VDD_RESET	O	CXD3807 RESET SIGNAL	PIN_AC26
#IN1/IN2	O	L:INPUT1 H:INPUT2	PIN_AB23
#BNC/RCA	O	L:S-BNC or Dsub H:RCA	PIN_AC22
AV_SW1	O	See the Page of AV Board	PIN_AD24
AV_SW2	O		PIN_AC23
YUV_ON	O	H:COMPOSITE L:OTHER	PIN_AE26
S_SW	I	L:S-Video IN	PIN_AC21
TRM1	O	H:Active	PIN_AB25
TRM2	O		PIN_AB26
PW_EEP_WP	O	H:Write Protect	PIN_AB16
PW_FLASH_WP	O	L:Write Protect	PIN_AB20
DVI_HOT	O	H:DVI RESERT	PIN_AB18
DDC_WRITE	O	H:Write L:Read	PIN_AB21
DDC_SW	O	H:HDCP L:PC	PIN_AB19
KEY_WP	O	H:WP_ON L:WP_OFF	PIN_Y26
SWF_DCM_RESET	O	SWFPGA RESET SIGNAL	PIN_AA23
SWF_DCM_LOCK	O	SWFPGA LOCK SIGNAL	PIN_AA21
SWF_SIG_SEL	O	H:PJ_NET L:AD9882	PIN_AB18
NET_OUT	O		PIN_T4
A_MUTE	O		PIN_T3
M_OUT	O		PIN_U3
SP_OFF_PW	O		PIN_V1

SDRAM

IC3411
MSM56V16160F

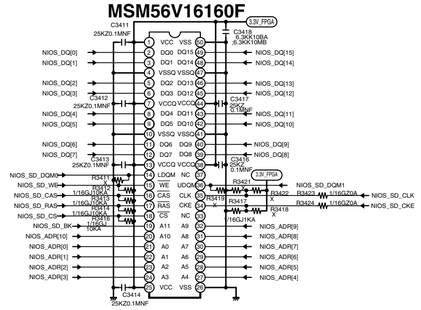

IC3401
PQ05VY3H3ZP

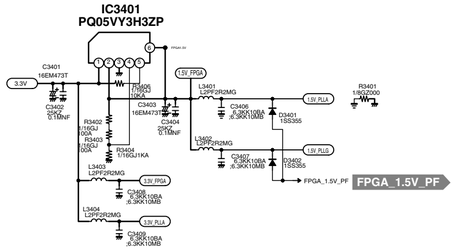

FPGA

IC4401
EP1S25F672C8N

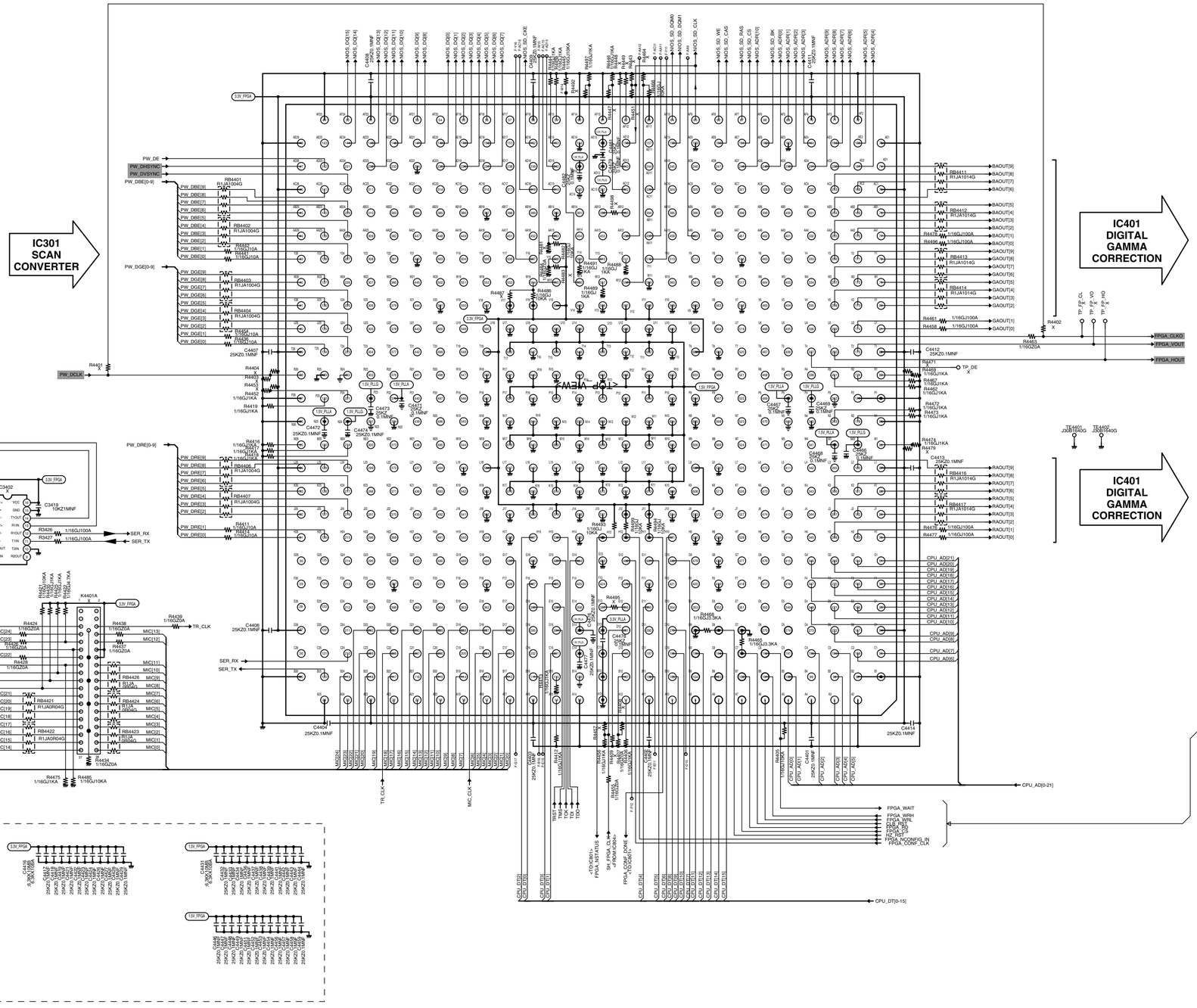

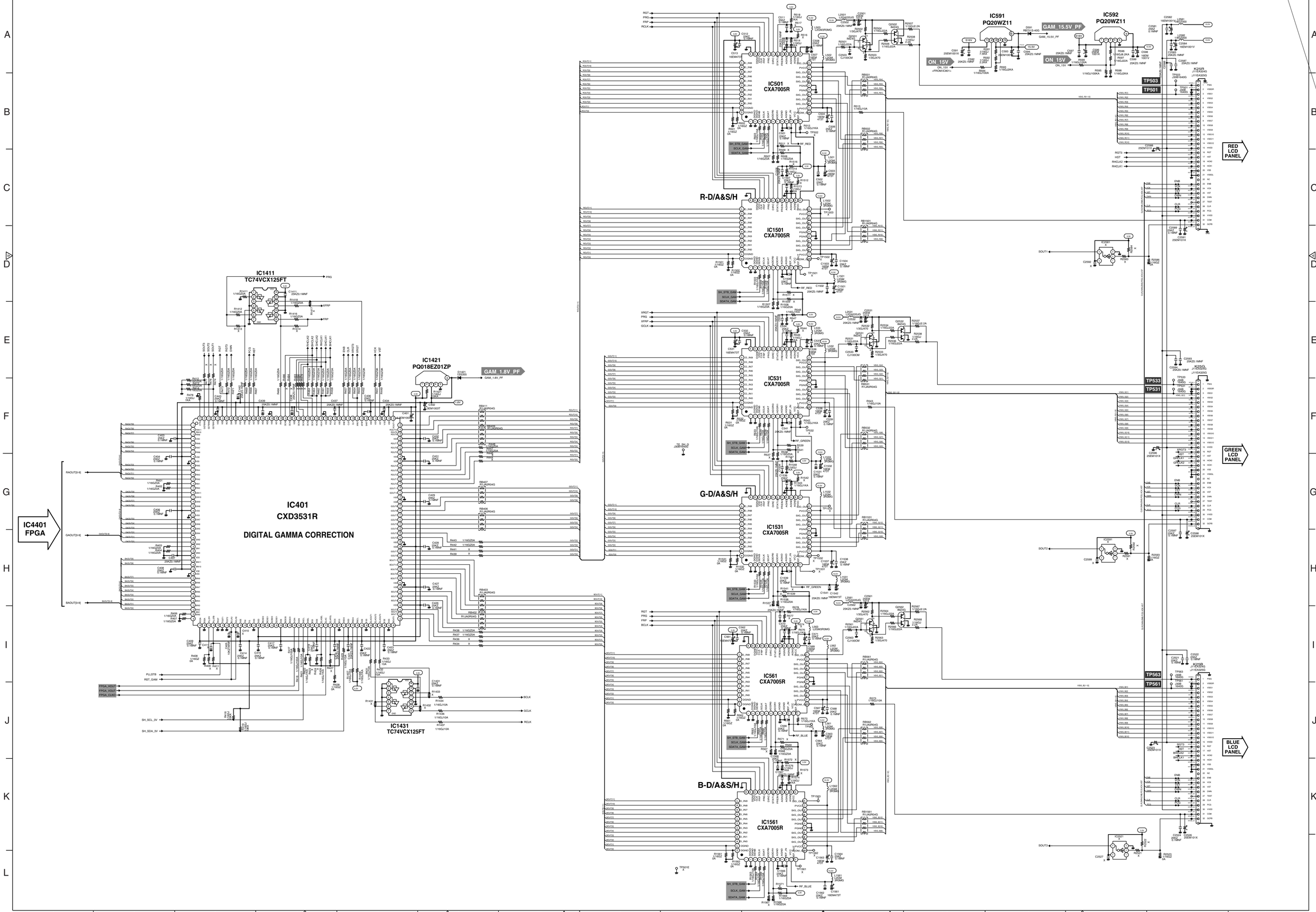
IC401
CXD3531R
DIGITAL GAMMA CORRECTION
IC4401
FPGA
IC1411
TC74VCX125FT
IC1421
PQ018EZ01ZP
IC1431
TC74VCX125FT
IC591
PQ20WZ11
IC592
PQ20WZ11
IC501
CXA7005R
IC1501
CXA7005R
IC531
CXA7005R
IC1531
CXA7005R
IC561
CXA7005R
IC1561
CXA7005R
R-D/A&S/H
G-D/A&S/H
B-D/A&S/H
GAM_1.8V_PF
GAM_15.5V_PF
ON_15V
TP503
TP501
TP533
TP531
TP563
TP561
RED LCD PANEL
GREEN LCD PANEL
BLUE LCD PANEL

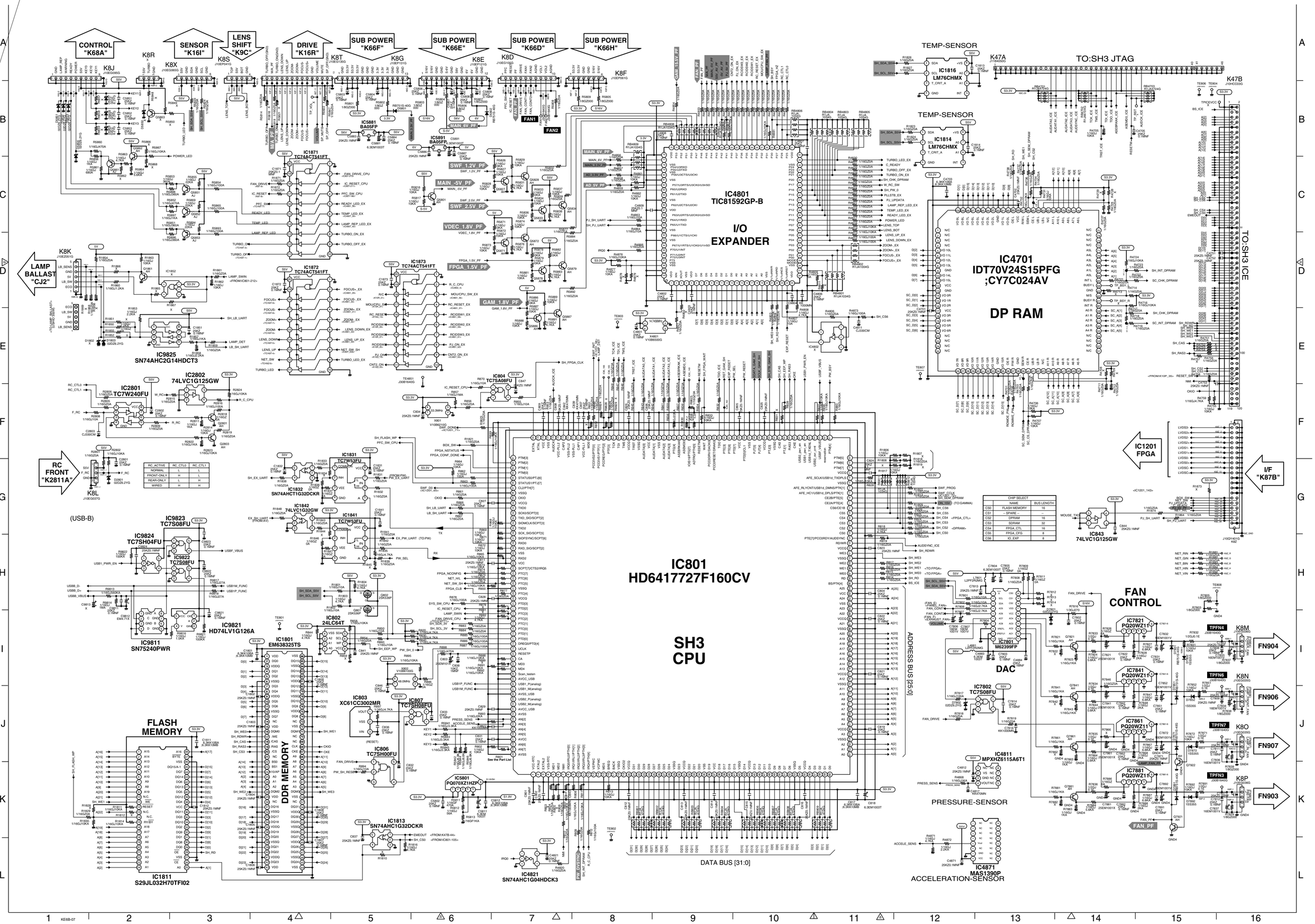

RC_ACTIVE	RC_CTL0	RC_CTL1
NORMAL	L	L
FRONT-ONLY	H	L
REAR-ONLY	L	H
WIRED	H	H

CHIP SELECT		
	NAME	BUS LENGTH
CS0	FLASH MEMORY	16
CS1	-- SPARE --	--
CS2	DPRAM	16
CS3	SDRAM	32
CS4	FPGA_CTL	16
CS5	FPGA_CFG	8
CS6	IO_EXP	8

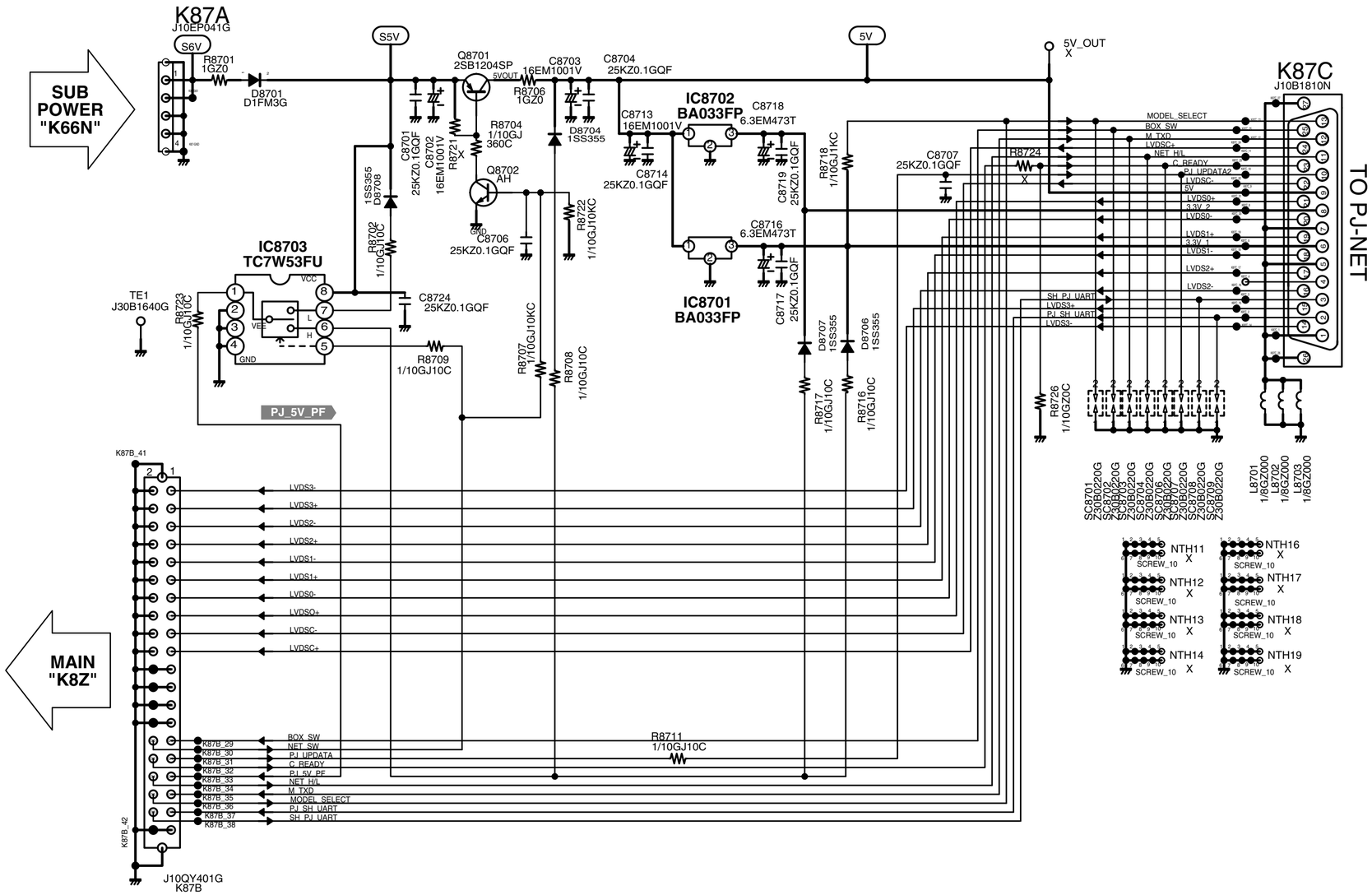
SUB POWER "K66N"
K87A
J10EP041G
S6V
R8701 1GZ0
D8701 D1FM3G
S5V
Q8701 2SB1204SP
5VOUT
C8703 16EM1001V
C8704 25KZ0.1GQF
5V
5V_OUT X
K87C
J10B1810N
TO PJ-NET
IC8702 BA033FP
C8718 6.3EM473T
C8713 16EM1001V
C8714 25KZ0.1GQF
C8716 6.3EM473T
IC8701 BA033FP
C8719 25KZ0.1GQF
C8717 25KZ0.1GQF
R8718 1/10GJ1KC
C8707 25KZ0.1GQF
R8724 X
R8704 1/10GJ 360C
R8706 1GZ0
D8704 1SS355
Q8702 AH
C8706 25KZ0.1GQF
R8722 1/10GJ10KC
C8701 25KZ0.1GQF
C8702 16EM1001V
R8721 X
1SS355 D8708
R8702 1/10GJ10C
IC8703 TC7W53FU
VCC
VEE
GND
TE1 J30B1640G
R8723 1/10GJ10C
C8724 25KZ0.1GQF
R8709 1/10GJ10C
R8707 1/10GJ10KC
R8708 1/10GJ10C
PJ_5V_PF
D8707 1SS355
D8706 1SS355
R8717 1/10GJ10C
R8716 1/10GJ10C
R8726 1/10GZ0C
MODEL_SELECT
BOX_SW
M_TXD
LVDSC+
NET_H/L
C_READY
PJ_UPDATA2
LVDSC-
5V
LVDS0+
3.3V_2
LVDS0-
LVDS1+
3.3V_1
LVDS1-
LVDS2+
LVDS2-
SH_PJ_UART
LVDS3+
PJ_SH_UART
LVDS3-
SC8701 230B0220G
SC8702 230B0220G
SC8703 230B0220G
SC8704 230B0220G
SC8705 230B0220G
SC8706 230B0220G
SC8707 230B0220G
SC8708 230B0220G
SC8709 230B0220G
L8701 1/8GZ000
L8702 1/8GZ000
L8703 1/8GZ000
NTH11 X
NTH12 X
NTH13 X
NTH14 X
NTH16 X
NTH17 X
NTH18 X
NTH19 X
SCREW_10
MAIN "K8Z"
K87B_41
K87B_42
J10QY401G
K87B
LVDS3-
LVDS3+
LVDS2-
LVDS2+
LVDS1-
LVDS1+
LVDS0-
LVDSO+
LVDSC-
LVDSC+
K87B_29 BOX_SW
K87B_30 NET_SW
K87B_31 PJ_UPDATA
K87B_32 C_READY
K87B_33 PJ_5V_PF
K87B_34 NET_H/L
K87B_35 M_TXD
K87B_36 MODEL_SELECT
K87B_37 PJ_SH_UART
K87B_38 SH_PJ_UART
R8711 1/10GJ10C

■ Printed Wiring Board Diagrams

RC FRONT (SIDE:A)

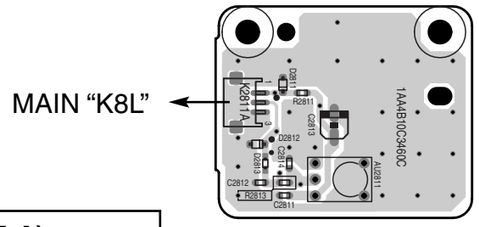

RC FRONT (SIDE:B)

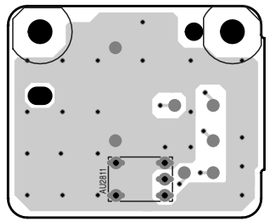

⚠ CAUTION

This projector is isolated from AC line by using the internal converter transformer. Please pay attention to the following notes in servicing

1. Do not touch the part on hot side (primary circuit) or both parts on hot and cold sides (secondary circuit) at the same time.
2. Do not shorten the circuit between hot and cold sides.
3. The grounding lead must be connected to the ground of the same circuit when measuring of voltages and waveforms.

CONTROL (SIDE:A)

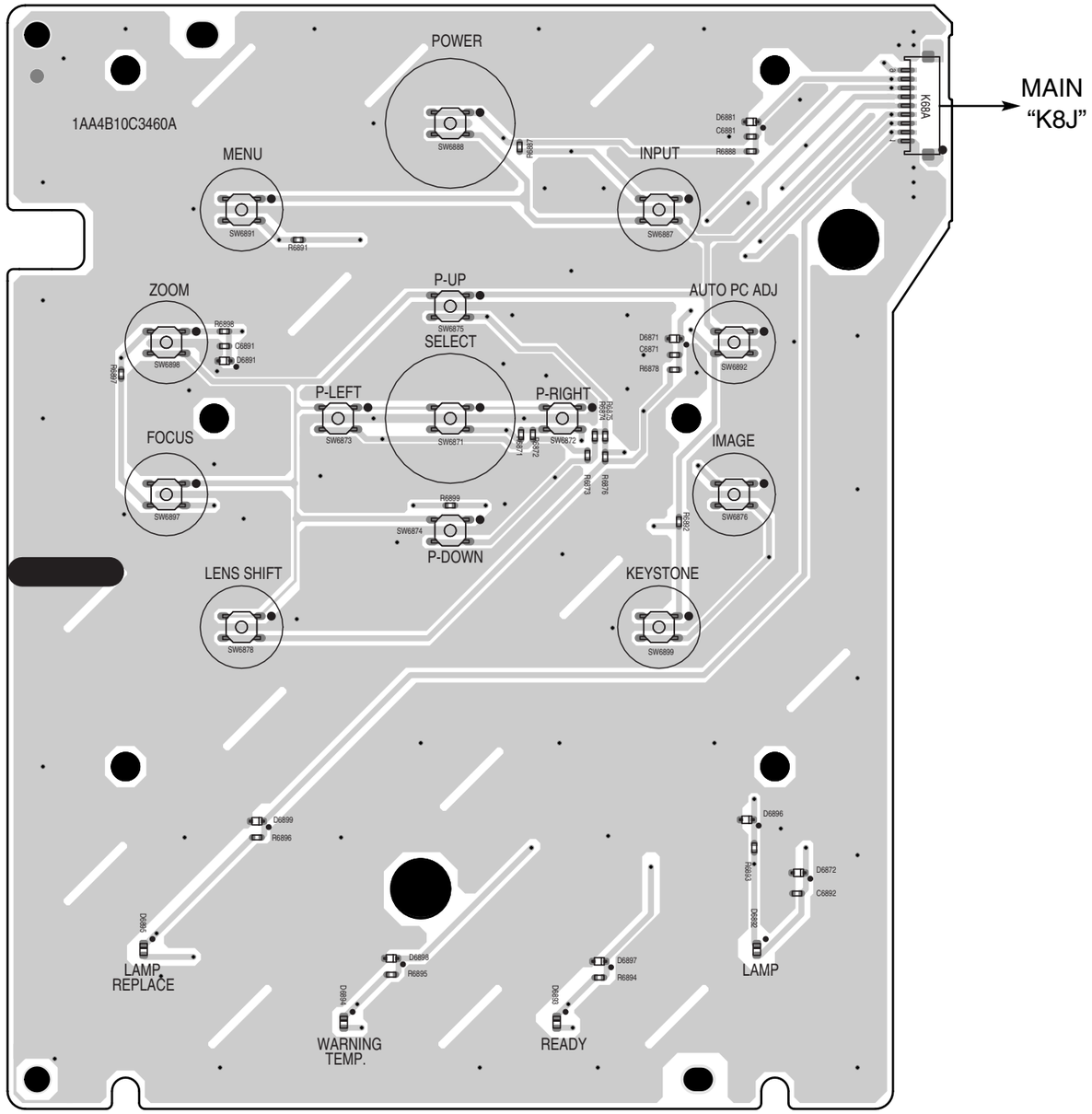

CONTROL (SIDE:B)

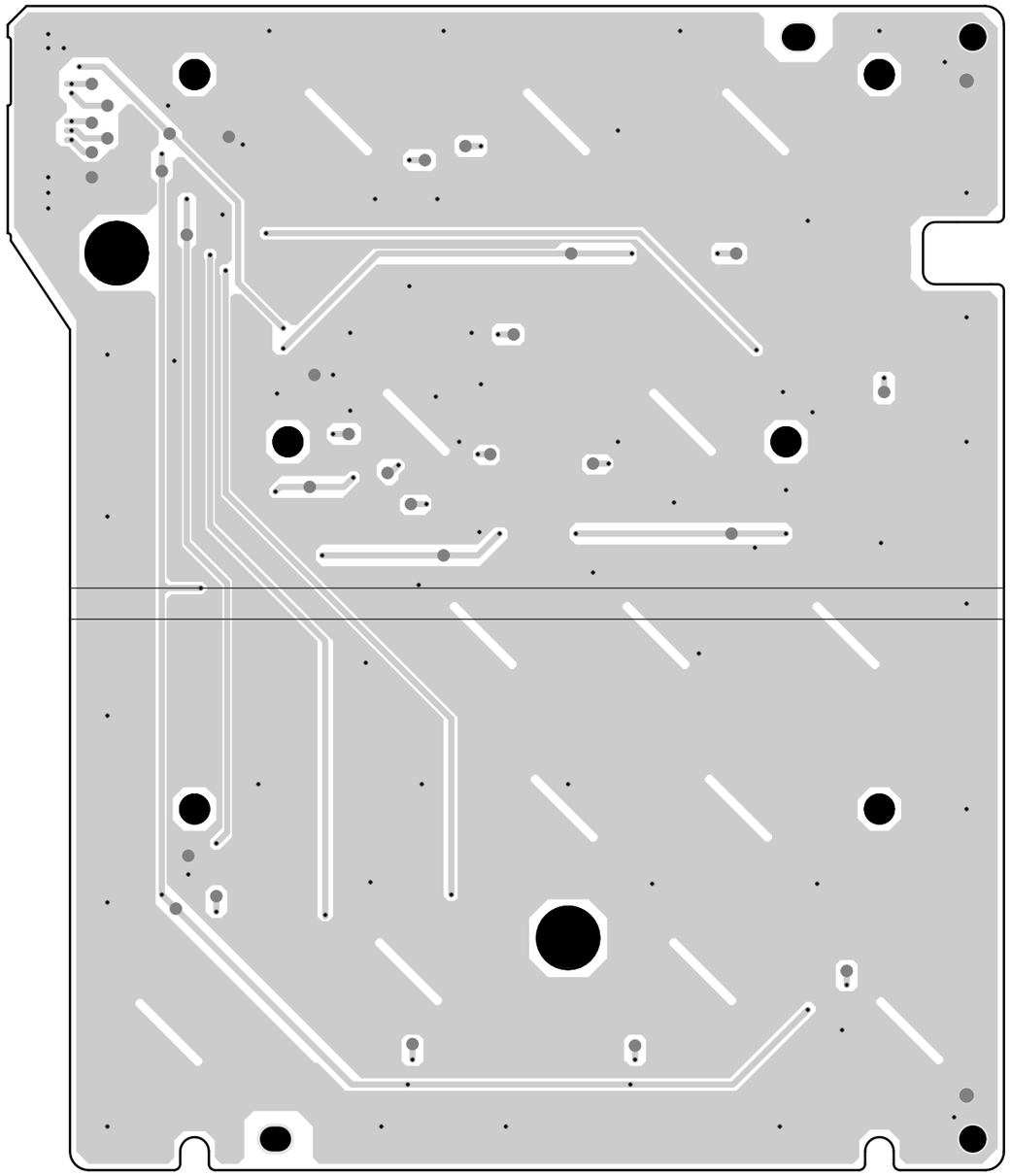

MAIN (SIDE:A)

RC FRONT “K2811A”

SUB POWER “K66E”

SUB POWER “K66D”

LENS SHIFT CONNECT “K9C”

CONTROL “K68A”

R-LCD PANEL

B-LCD PANEL

G-LCD PANEL

FN903

FN907

FN904

FN906

A_side

1AA4B10C53800

TERMINAL1 (SIDE:A)

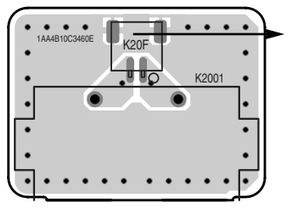

SW “K20C”

TERMINAL1 (SIDE:B)

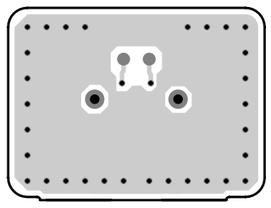

MAIN (SIDE:B)

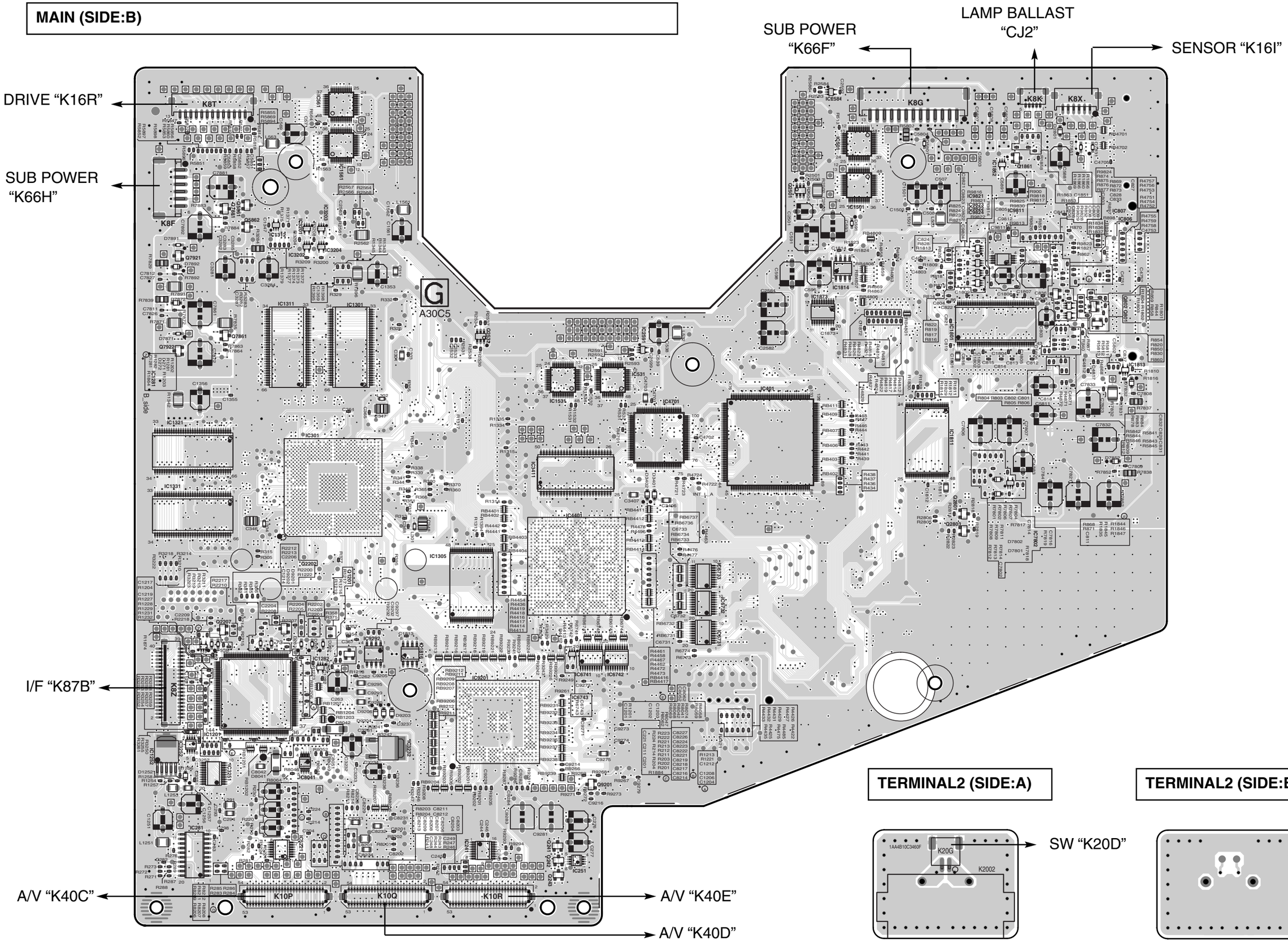
SUB POWER
"K66F"
LAMP BALLAST
"CJ2"
SENSOR "K16I"
DRIVE "K16R"
SUB POWER
"K66H"
I/F "K87B"
A/V "K40C"
A/V "K40E"
A/V "K40D"
K8T
K8F
K8G
K8K
K8X
K82
K10P
K10Q
K10R
G
A30C5
B_side
TERMINAL2 (SIDE:A)
TERMINAL2 (SIDE:B)
SW "K20D"
K20G
K2002

POWER (SIDE:A)

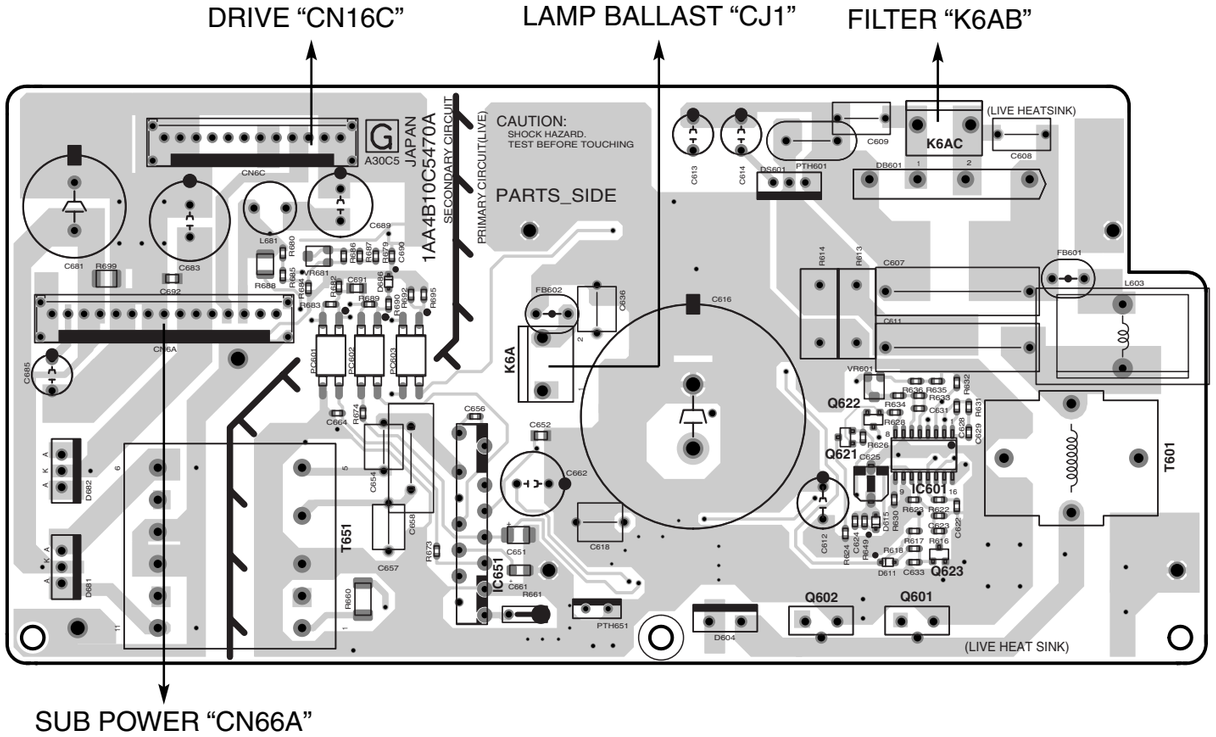

POWER (SIDE:B)

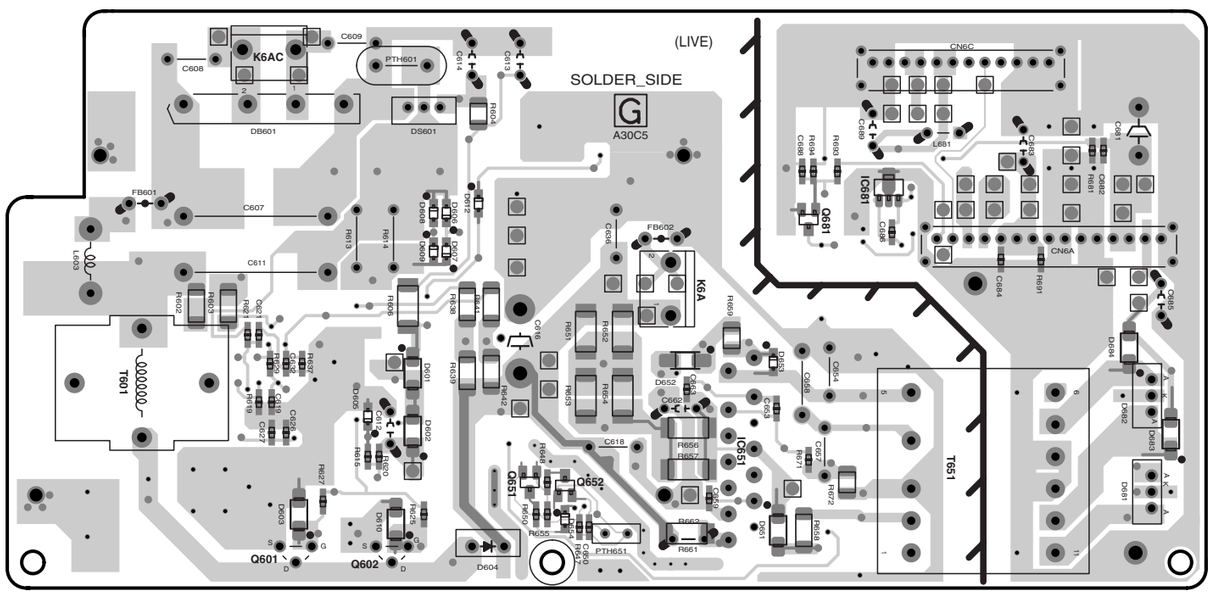

FILTER (SIDE:A)

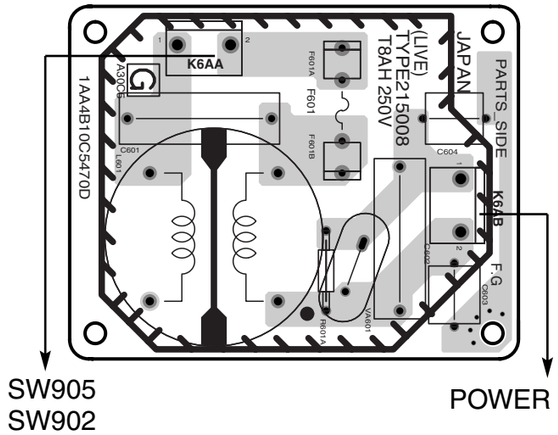

FILTER (SIDE:B)

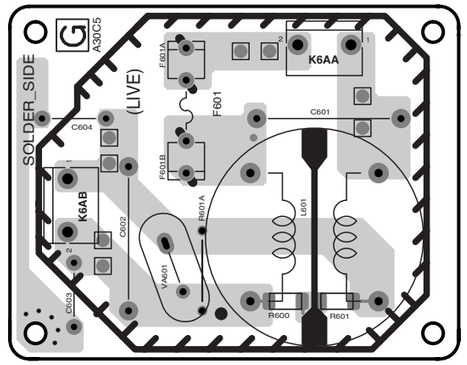

SW (SIDE:A)

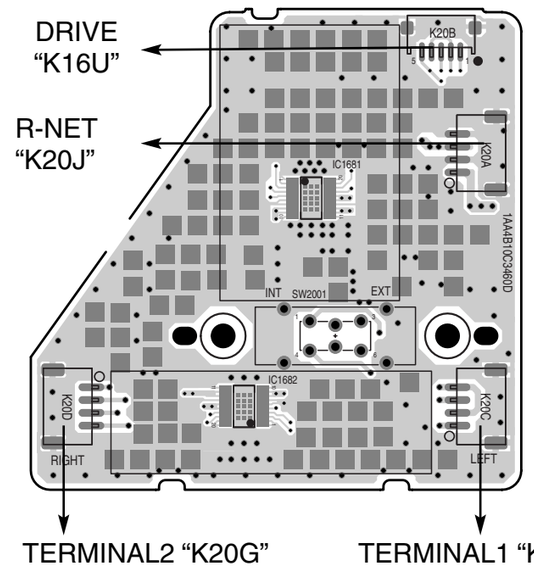

SW (SIDE:B)

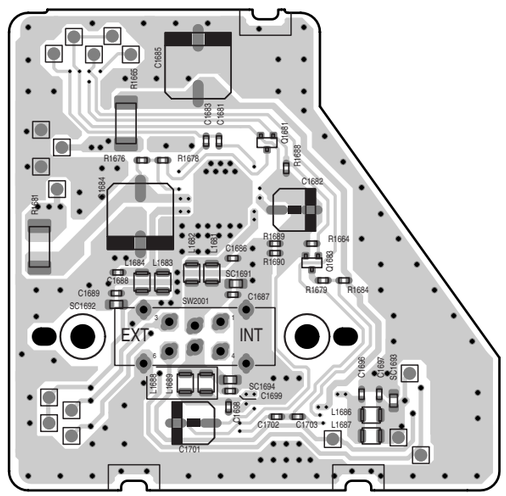

R-NET (SIDE:A)

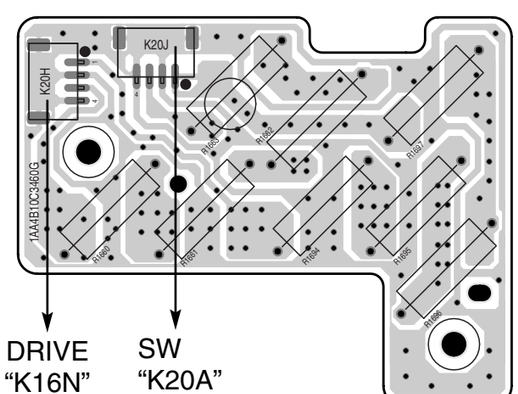

R-NET (SIDE:B)

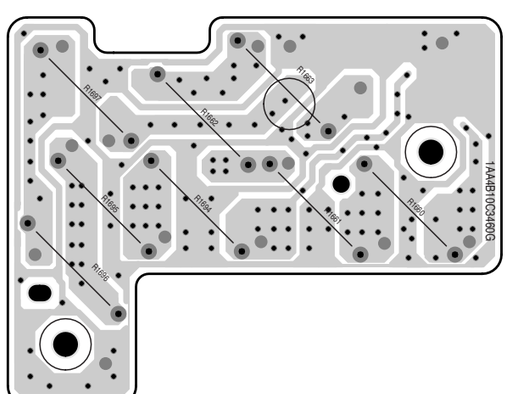

SUB POWER (SIDE:A)

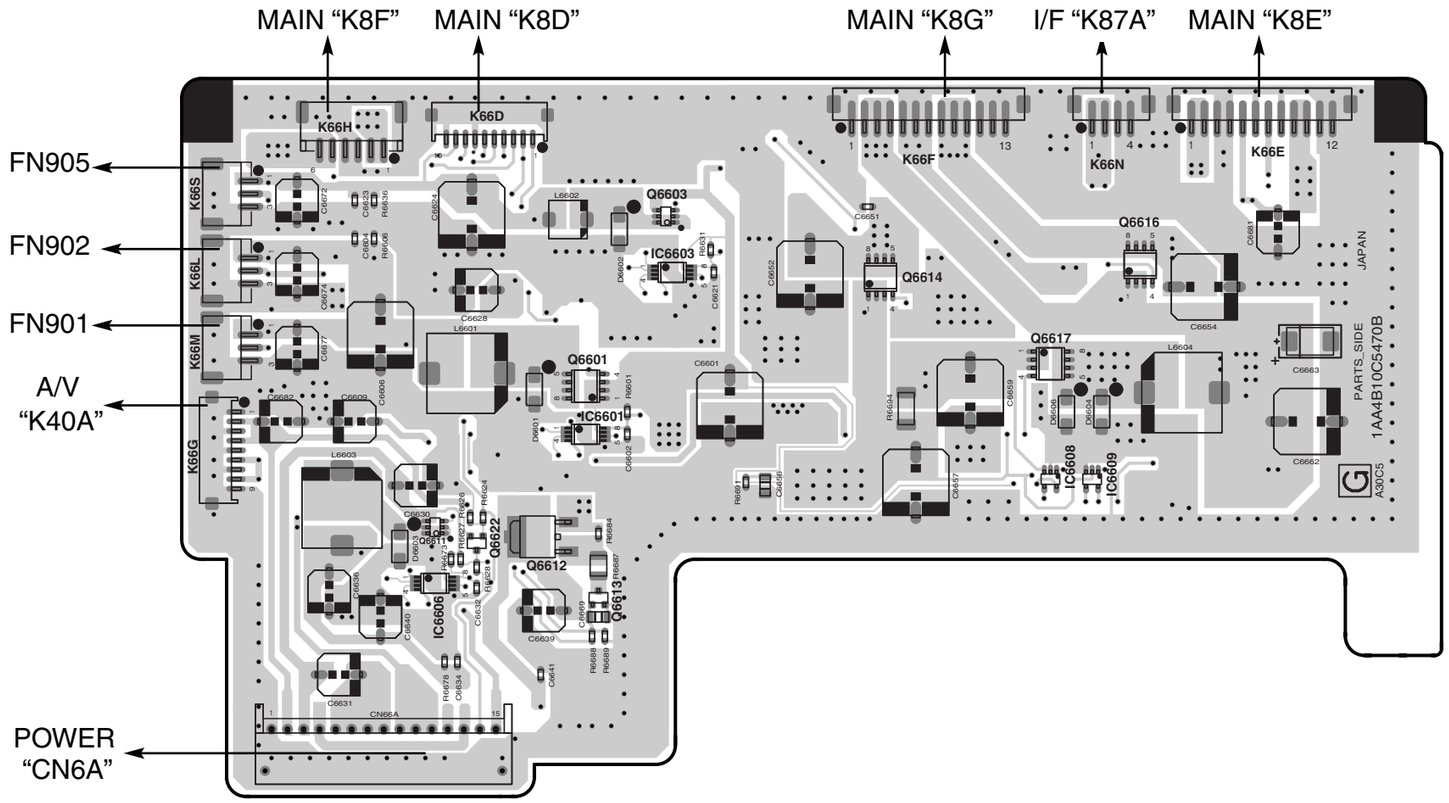

DRIVE (SIDE:A)

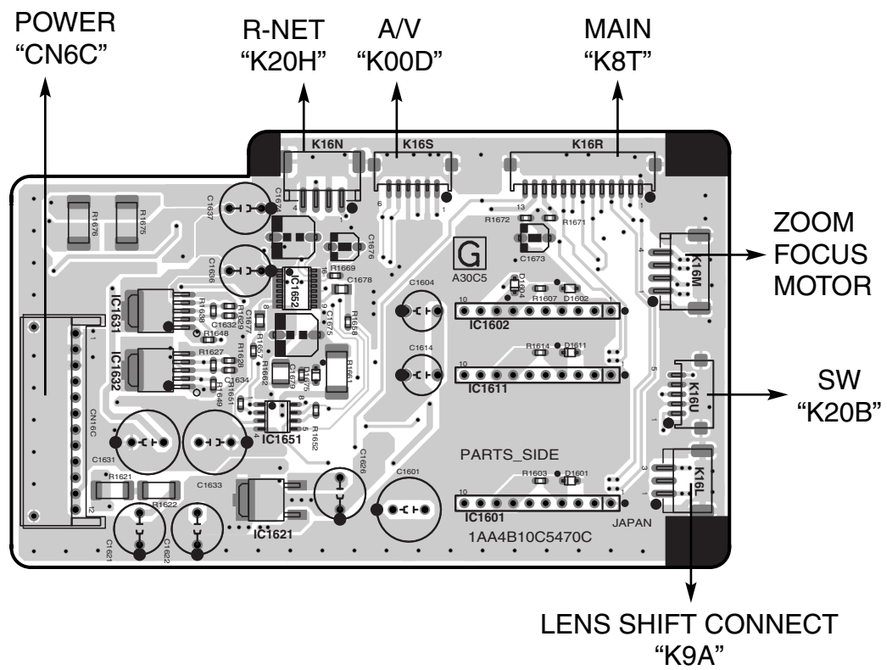

SUB POWER (SIDE:B)

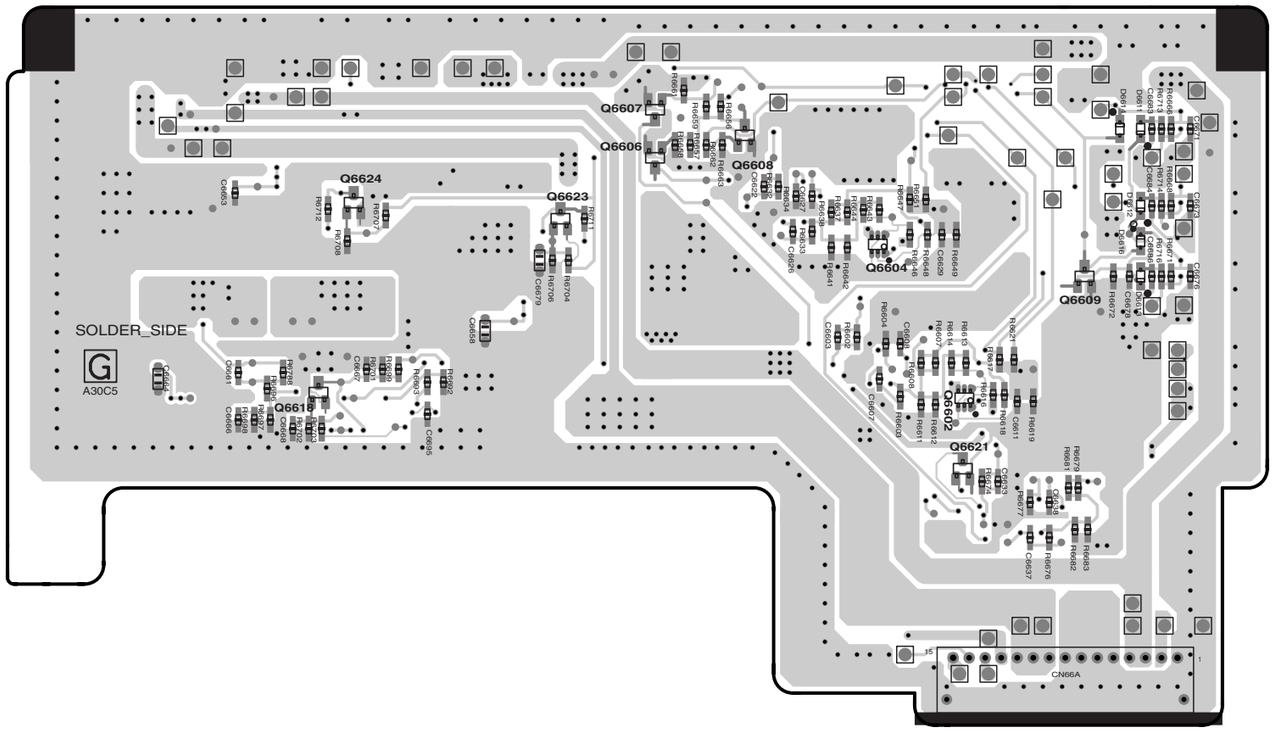

DRIVE (SIDE:B)

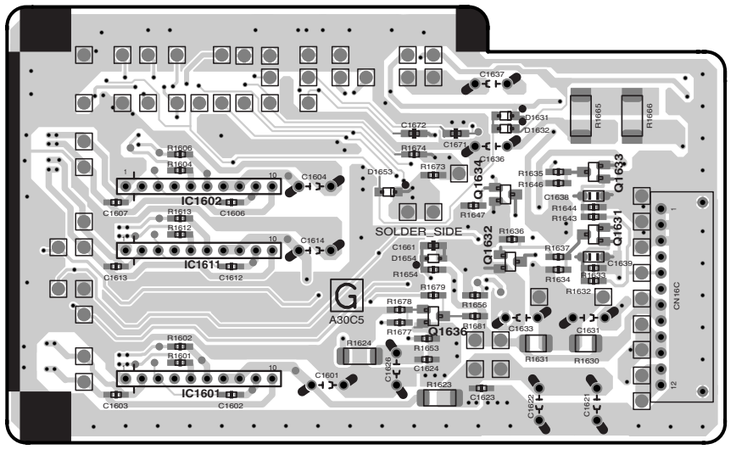

SENSOR (SIDE:A)

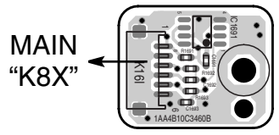

SENSOR (SIDE:B)

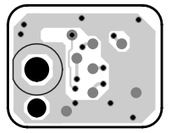

A/V (SIDE:A)

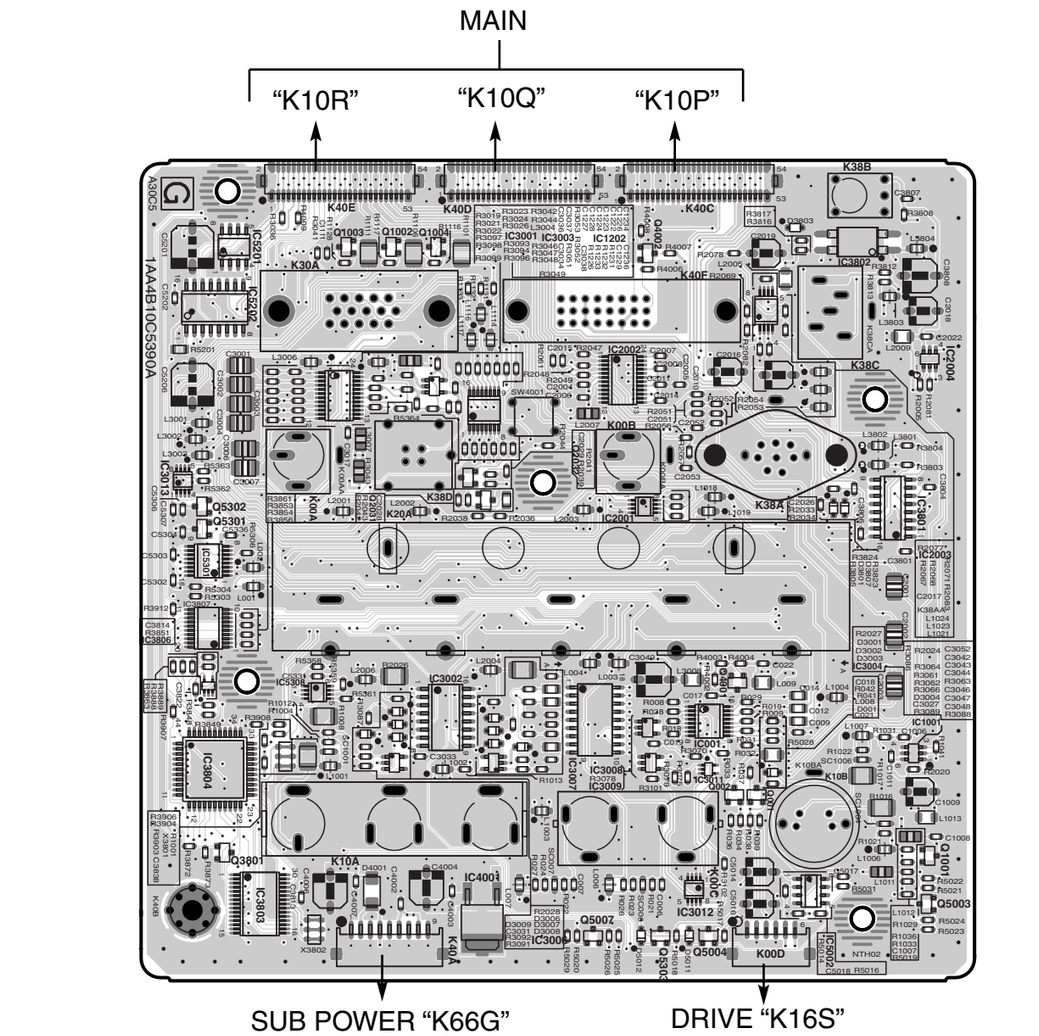

I/F (SIDE:A)

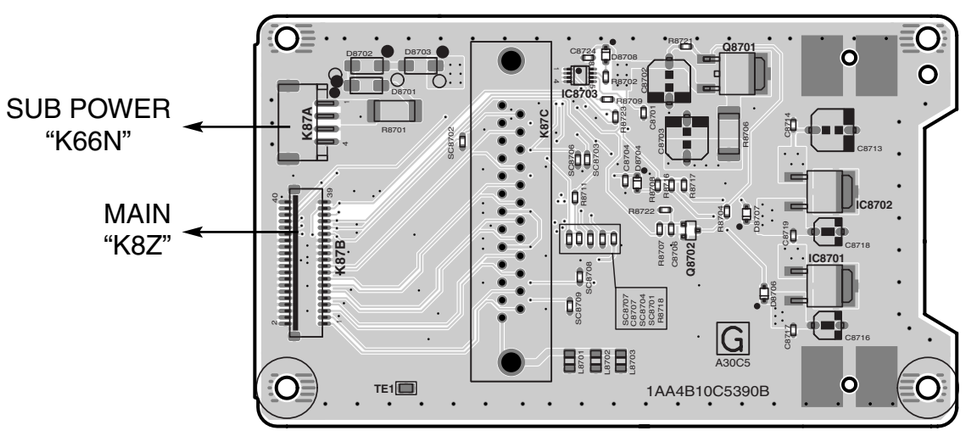

A/V (SIDE:B)

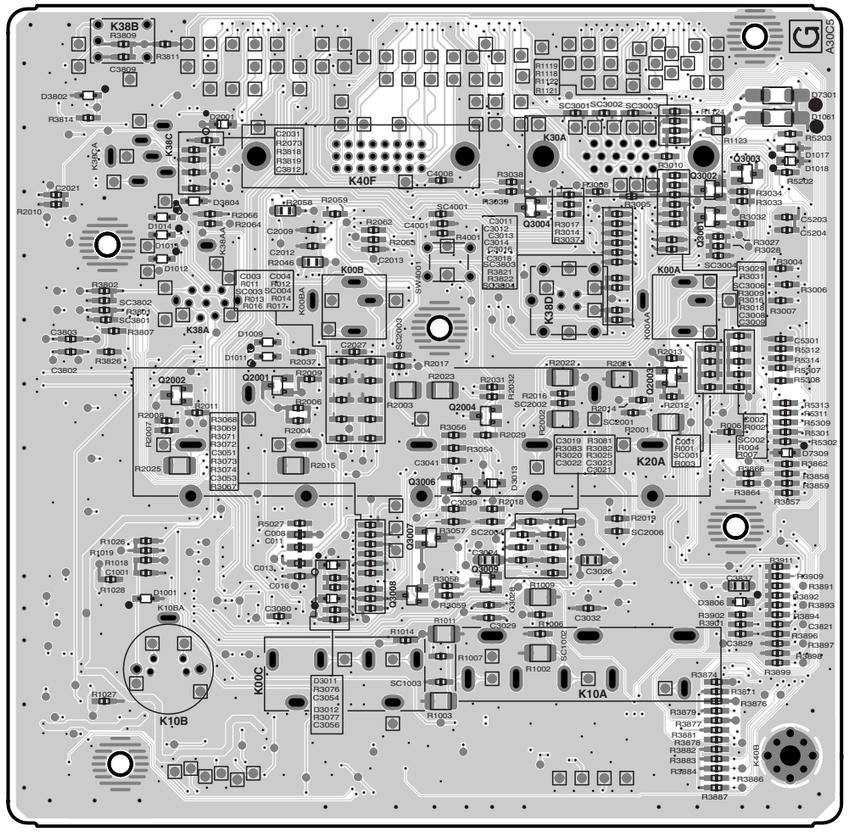
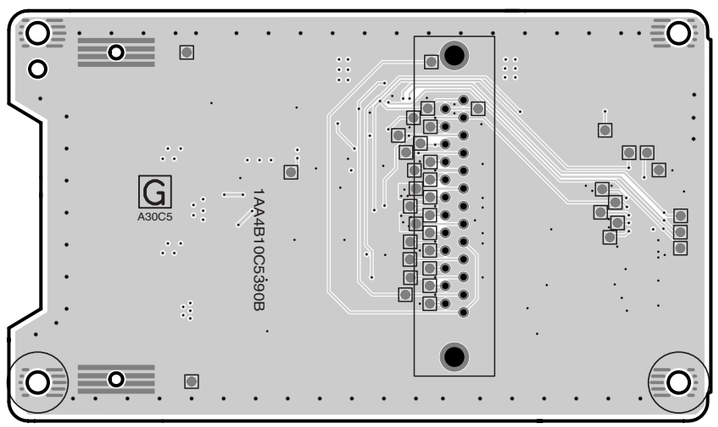
I/F (SIDE:B)