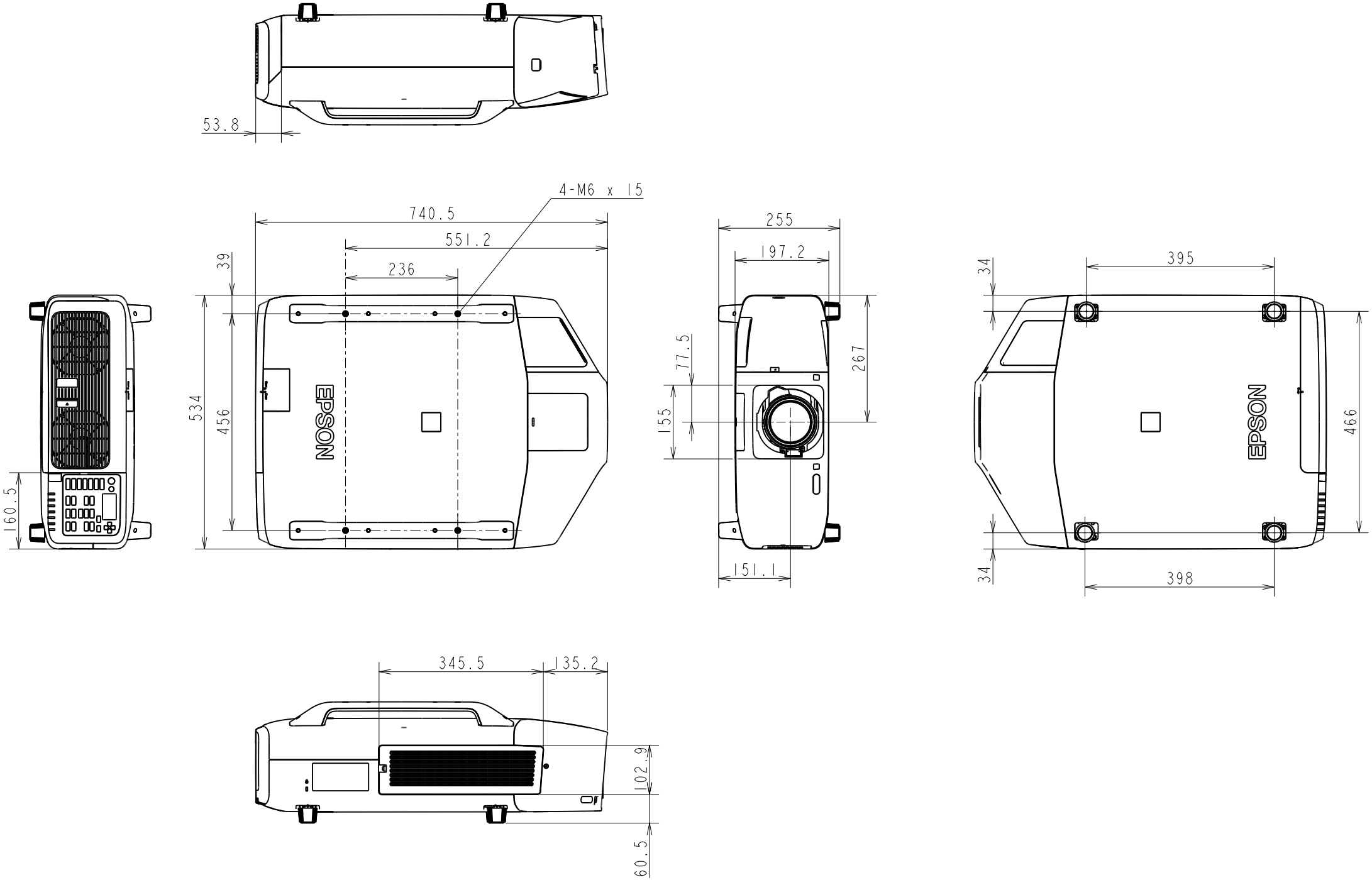
53.8
4-M6 x 15
740.5
551.2
236
39
534
456
160.5
EPSON
255
197.2
77.5
155
267
151.1
34
395
466
398
345.5
135.2
102.9
60.5