EXCELTA
USA
530E-US
5-SN
EXCELTA®
SINCE 1957
CobaltIima®
Allima®
Precista®
Optima®
Neverust®
Selecta®
LazerLine®
Ergo-Tweeze®
IntelliTweeze®
TweezerMeter®

Over sixty years ago, the American aerospace industry was faced with a problem. As technology advanced, electronics were getting smaller, more complex, and harder to assemble and maintain. This problem needed solving, and a young entrepreneur named Jerome Dalseme thought he carried the answer in his briefcase, a selection of precision watchmakers tools from Europe.

When the giants of aerospace were presented with these purpose-built, high-precision tweezers, they found the tools they needed. Many of these tweezers were adopted and remained in use for decades. After this success, Mr. Dalseme founded Excelta on the principle of staying one step ahead of the changing needs of its customers and always offering a tool Precisely Right for the job.

Our catalog began as a modest selection of pliers and tweezers which has now grown to encompass over 1,500 hand tools. We pay close attention to our customers in military and consumer electronics, in medical device manufacturing and in schools and labs across the country to ensure Excelta stocks the tools they need.

Excelta's Special & Customs Application Department are experts in adapting tools to meet hyperspecialized needs. Our California-based manufacturing plant hosts an innovative R&D department and works diligently to develop groundbreaking new designs for the hand tools of tomorrow.

Industry is constantly changing and Excelta is committed to making sure you're always reaching for a tool that is Precisely Right for the task at hand.

PRODUCT HIGHLIGHTS

Page 14, 16
Page 22
Page 25-26
Page 113

9200 SL Series

New Slim Line Cutters - New geometry, improved LazerLok™ joint system, ESD-safe slim handles and black oxide finish to inhibit rust and glare.

7376E

New subminiature angulated tip cutter. Our smallest tip cutter yet. 50° tip angle makes for excellent visibility in limited access areas or microscopic work.

EI Series

New Italian made cutters - 3 Star cutters for general use. Hardened jaws allow greater tool life and smooth clean cuts.

M-159 Series

New miniature Carbofib™ tweezers. Protect against ESD damage(conductive), Nicking, Scratching and Marring with these new 3 1/2" softip tweezers. Ideal for working under a microscope or in areas with limited accessibility.

5 levels of precision!

5 levels of pricing!

We offer a wide range of materials and designs for any application.

★★★★★ For the most critical applications, the Excelta Five Star line offers ultra-precision with the most advanced materials available.

★★★★ For demanding applications, the Excelta Four Star line meets and exceeds high precision requirements.

★★★ The Excelta Three Star line offers the widest range of products designed for pharmaceutical, medical manufacturing, military and electronic assembly.

★★ When precision is required and price is a concern, the Excelta Two Star line fills most requirements.

★ The One Star line offers quality products at the most economical price.

Call us at Excelta Corporation or contact your local Excelta Sales Representative to find tools *"Precisely Right"* for you.

TABLE OF CONTENTS

CUTTERS

Technical Information 10
Correlation Chart 13
Side Cutters
- Small Head 14
- Medium Head 16
- Large Head 19

Fine Tip Cutters 20
Angulated Cutters
- Small Head 22
- Medium Head 23
- Large Head 24

Transverse Cutters 26
Tungsten Carbide Insert Cutters 27
Standoff Shear Cutters 28
Cable Cutters/Depanelizers 33

PLIERS

Plier Technical Information 35
Miniature Self-Opening 36
Standard Pliers
- Small Head 37
- Medium Head 40
- Large Head 43
- Cleanroom Safe 44

Soft Tip 45
Wide Jaw 46
Concave/Convex 46
Tubing Cutters/Expanders 47

DESIGN SPECIALS

Lead Forming 50
Insertion/Extraction Pliers 57

TWEEZERS

Technical Information 58
Adders 60
Cobalt Alloy 62
Exotic Metals/Coatings 66
Standard 72
- Straight Tapered - Microscopy 73
- Straight Very Fine Points 74
- Angulated Very Fine Points 76
- Curved Very Fine Points 78
- Straight Medium Points 79
- Straight Strong Points 80
- Straight Medium Points 81
- Straight Round Fine Points 82
- Straight Broad/Medium Points 83
- Angled Medium Points 84
- Tapered Flat Round Points 85
- Large Flat Points 86

TWEEZERS (Cont)

Cross Action 87
Miniature 65/89
Ergonomic 92
SMD & Small Parts Handling 100
Wafer 105
Replaceable Tip 108
- Peek 109
- Copolymer 110
- Carbon Fiber 111
- Acetal 113
- Ceramic 115

Plastic 116
Cutting 118
Wire Stripping Tools 124
Kitsets 126
Lab Specific 130

SCISSORS HEMOSTATS

Scissors
- Tungsten Carbide Insert 136
- Delicate Applications 137
- Fine Precision 140
- Large Precision 144

Hemostats 145
Clamps & Needle Holders 147

BRUSHES

Instrument Cleaning/Heat Resistant 148
ESD Safe/Cleanroom Safe 149
Scratch/Cleaning 150
Miscellaneous - ESD Safe 151

SMALL HAND TOOLS

Scalpels & Razor Blades 152
Miniature Oilers 154
Spatulas / Mirrors 156
Pin Vises 157
Probes & Scribes
- Stainless Steel 158
- Lab Specific 159

Magnifiers / Loops 160

METERS

Continuity Meter 161
R-C-L Meter 162

VACUUM

Roto Pic® Vacuum System 166
Continous Vacuum 168
Pen-Vac® and Handi-Vac® 169
Cups and Probes 171

CUSTOM
DESIGN SERVICE

As the leader in tool technology, Excelta knows every application is unique. Our Custom Design facility can work from your schematic to manufacture any tool to your specifications. Or, if you prefer, our experienced designers can diagnose your needs and design a tool “Precisely Right” for your unique application.

Whether you need a single tool to handle special parts under unique conditions, or a supply of custom tools to crimp, cut, place or extract parts, Excelta's Custom Design Service has the experience, ingenuity and capability to meet your needs.

USA

Precision.

Welcome to the new era in wire cutting technology!

DESIGNED AND MANUFACTURED
IN BUELLTON CALIFORNIA

EDGES ARE INDUCTION
HARDENED TO RHC 63-65

STAINLESS STEEL
LEAF SPRINGS

LazerLine

Excelta has pioneered the combined use of Laser technology with advanced CNC machining to build the finest grade cutter available. We start with premium steel, laser cut for consistency, and milled to exact specifications at our headquarters in Buellton, CA. Our cutting blades are induction hardened to

★★★★★ Ultra Precision

LazerLine

Look for the Made in USA icon throughout the catalog!

63-65 Rockwell C for durability, then CNC ground to within a thousandth of an inch to achieve unsurpassed sharpness and an unbelievably clean cut. Excelta's LazerLine series represents state of the art cutting tools, and is Precisely Right for all your cutting needs.

SIDE CUTTER
Selection Guide

1. Choose head shape based on the following:

- The oval head cutter is the most common head shape for cutting tools. It allows for the maximum amount of 'metal' behind the cutting edge delivering an extremely long tool life.
- The tapered head was developed to allow the cutting tool to get into those "hard to reach" areas. It was designed more along diagonal lines with less "metal" behind the cutting edge.
- The tapered/relieved head allows for the most access to "hard to reach" areas. In addition to having a diagonal profile, the face has been relieved allowing even greater access.

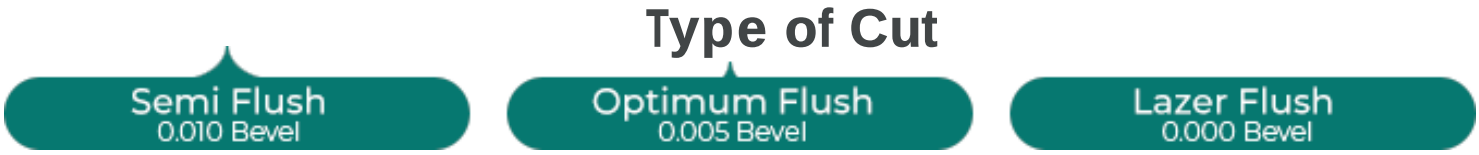

2. Choose 'Type of Cut' based on the following:

- Semi-Flush cutters have a cutting edge with a .010" bevel, which produces more cuts than a maximum flush cutter but leaves a 'pinch' on the lead/wire.
- Optimum-Flush cutters have a cutting edge with a .005" bevel, which produces a smaller 'pinch' on the lead/wire than a semi-flush cutter. The smaller bevel means fewer cuts than a semi-flush cutter.
- Lazer-Flush cutters have no bevel producing a pure, clean cut with no 'pinch' on the lead/wire. The cutting edges are extremely sharp. Cutting life is once again reduced over either of the above.

CUTTER CORRELATION CHART

3. Find your wire type & size then choose the cutter from this chart:

Hard Wire - Annealed Stainless Steel, Nitinol, Titanium, Polypropylenes. Tensile Strength 116,000/19,000 PSI
Soft Wire - Copper Wire, Rubber, Polyurethanes and PTFE. Tensile Strength up to 30,000 PSI

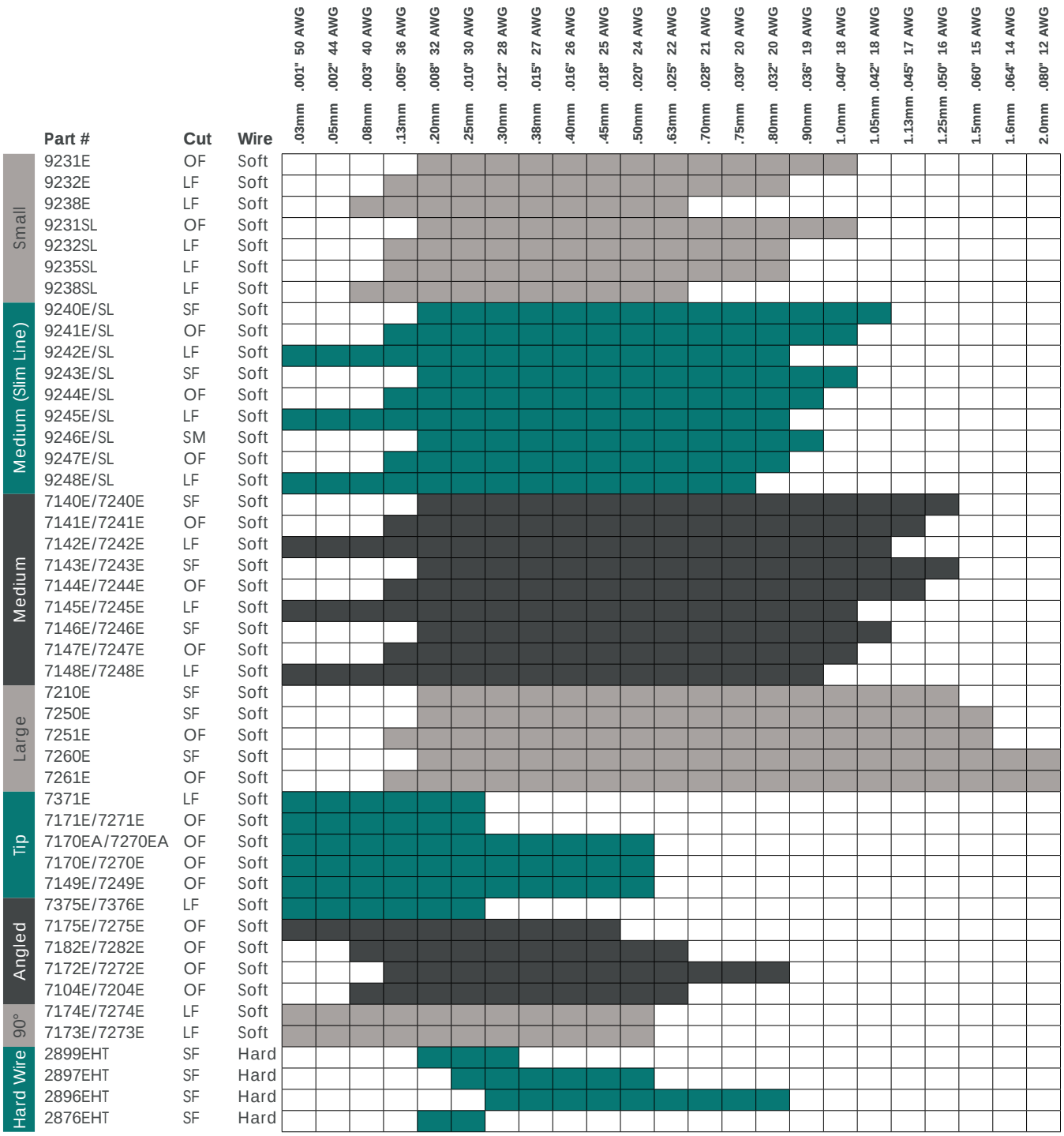

SLIM LINE

9000 SERIES | MINIATURE HEAD CUTTERS

MADE IN USA | ★★★★ EXTREME PRECISION

Our new 9230SL SLIM LINE series feature a completely new and smaller profile.
These tools have a black oxide finish to prevent oxidation and glare.

9230SL Series SL MOLDED Grips - ESD Safe (10^8 Ohms/Sq.) **Length 4.25" (106mm)**

ESD SAFE

Slim Line Small Round Head

Part#	Grip	Cutting Edge	Maximum Cutting Capacity		
9231SL	SL Molded	Optimum-Flush	18 AWG	.040"	1.00 mm
9232SL	SL Molded	Lazer-Flush	20 AWG	.032"	0.80 mm

MADE IN USA

NEW ITEM

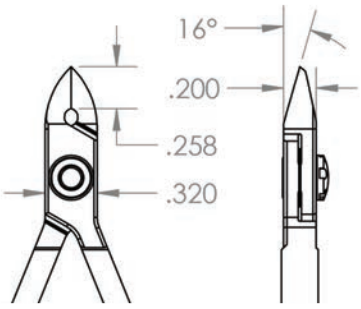

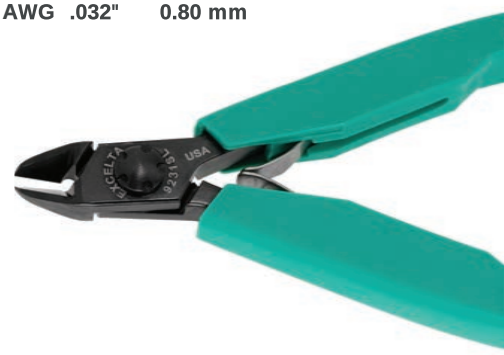

Slim Line Small Tapered

Part#	Grip	Cutting Edge	Maximum Cutting Capacity		
9235SL	SL Molded	Lazer-Flush	22 AWG	.025"	0.63 mm

MADE IN USA

NEW ITEM

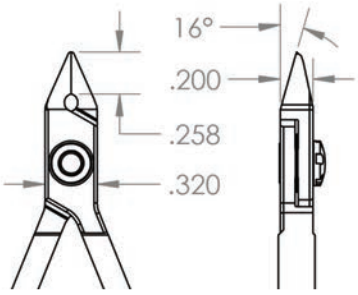

Slim Line Small Tapered/Relieved Head

Part#	Grip	Cutting Edge	Maximum Cutting Capacity		
9238SL	SL Molded	Lazer-Flush	22 AWG	.025"	0.63 mm

MADE IN USA

NEW ITEM

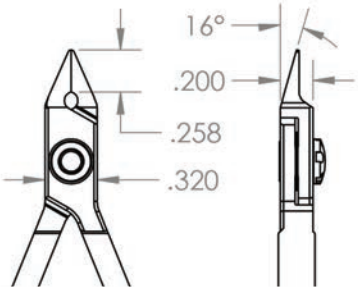

Our new 9230E series come with their own unique head shapes specifically designed to meet customers needs!

9230E Series **SL MOLDED Grips** - ESD Safe (10^8 ohms/sq.) **Length 4.25" (106mm)**

ESD SAFE

Small Round/Relieved Head

Part#	Grip	Cutting Edge	Maximum Cutting Capacity		
9231E	SL Molded	Optimum-Flush	18 AWG	.040"	1.00 mm
9232E	SL Molded	Lazer-Flush	20 AWG	.032"	0.80 mm

MADE IN USA

Small Tapered/Relieved Head

Part#	Grip	Cutting Edge	Maximum Cutting Capacity		
9238E	SL Molded	Lazer-Flush	22 AWG	.025"	0.63 mm

MADE IN USA

SLIM LINE

9000 SERIES | MEDIUM HEAD CUTTERS

MADE IN USA | ★★★★ EXTREME PRECISION

Our new 9240SL SLIM LINE series feature a completely new and smaller profile.
These tools have a black oxide finish to prevent oxidation and glare.

9240SL Series SL MOLDED Grips - ESD Safe (10^8 Ohms/Sq.) **Length 4.25" (108mm)**

ESD SAFE

Slim Line Medium Oval Head

NEW ITEM

Part#	Grip	Cutting Edge	Maximum Cutting Capacity		
9240SL	SL Molded	Semi-flush	18 AWG	.042"	1.05mm
9241SL	SL Molded	Optimum-flush	18 AWG	.040"	1.00 mm
9242SL	SL Molded	Lazer-flush	20 AWG	.032"	0.80 mm

MADE IN USA

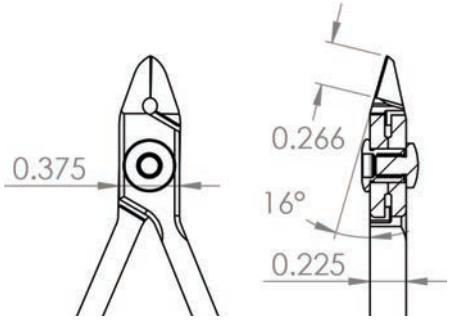

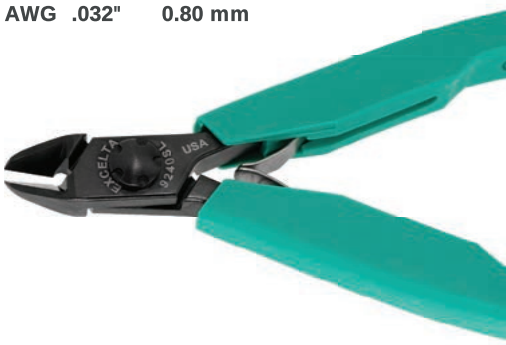

Slim Line Medium Tapered Head

NEW ITEM

Part#	Grip	Cutting Edge	Maximum Cutting Capacity		
9243SL	SL Molded	Semi-flush	18 AWG	.040"	1.00 mm
9244SL	SL Molded	Optimum-flush	19 AWG	.036"	0.90 mm
9245SL	SL Molded	Lazer-flush	20 AWG	.032"	0.80 mm

MADE IN USA

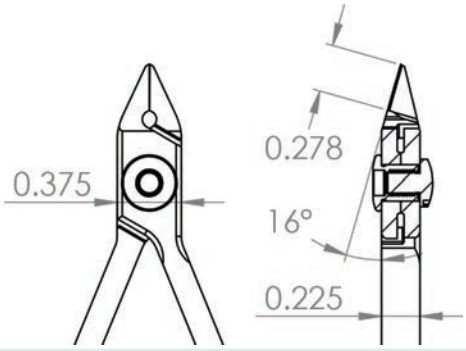

Slim Line Medium Tapered/Relieved Head

NEW ITEM

Part#	Grip	Cutting Edge	Maximum Cutting Capacity		
9246SL	SL Molded	Semi-flush	19 AWG	.036"	0.90 mm
9247SL	SL Molded	Optimum-flush	20 AWG	.032"	0.80 mm
9248SL	SL Molded	Lazer-flush	20 AWG	.030"	0.75 mm

MADE IN USA

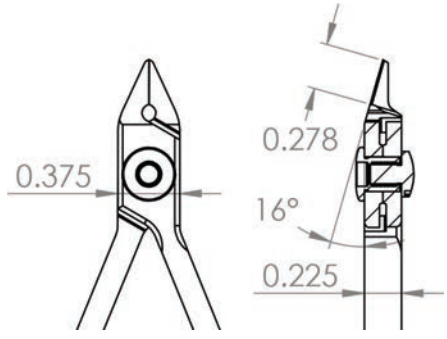

MEDIUM HEAD CUTTERS | 9000 SERIES

★★★★★ ULTRA PRECISION | MADE IN USA

9200 Series **STANDARD Cushion Grip** - ESD Safe (10^{10} ohms/sq.) **Length 4.50" (112mm)**

9200-GM Series **MOLDED Grip** - ESD Safe (10^{8} ohms/sq.) **Length 4.75" (119mm)**

ESD SAFE

Medium Oval Head

MADE IN USA

Part#	Grip	Cutting Edge	Maximum Cutting Capacity
9240E	Standard	Semi-Flush	18 AWG .042" 1.05mm
9241E	Standard	Optimum-Flush	18 AWG .040" 1.00 mm
9241E-GM	Molded	Optimum-Flush	18 AWG .040" 1.00 mm
9242E	Standard	Lazer-Flush	20 AWG .032" 0.88mm

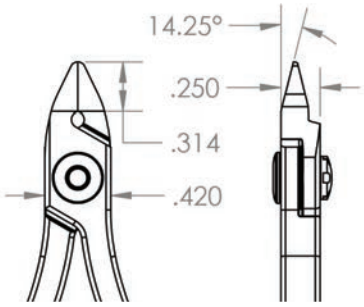

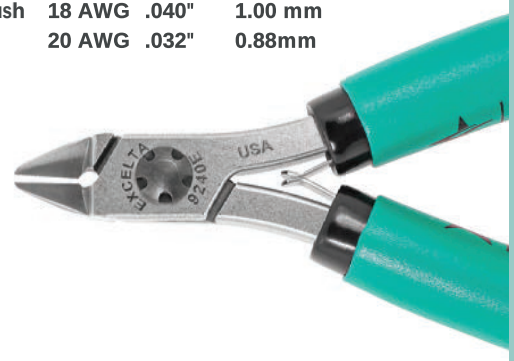

Medium Tapered Head

MADE IN USA

Part#	Grip	Cutting Edge	Maximum Cutting Capacity
9243E	Standard	Semi-Flush	18 AWG .040" 1.00mm
9244E	Standard	Optimum-Flush	19 AWG .036" 0.90mm
9244E-GM	Molded	Optimum-Flush	19 AWG .036" 0.90mm
9245E	Standard	Lazer-Flush	20 AWG .032" 0.88mm

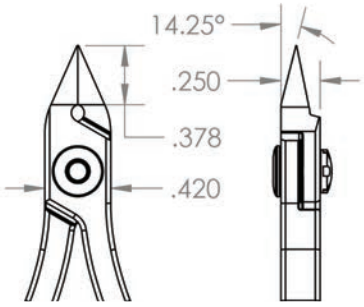

Medium Tapered/Relieved Head

MADE IN USA

Part#	Grip	Cutting Edge	Maximum Cutting Capacity
9246E	Standard	Semi-flush	19 AWG .036" 0.90 mm
9247E	Standard	Optimum-flush	20 AWG .032" 0.80 mm
9248E	Standard	Lazer-flush	20 AWG .030" 0.75 mm

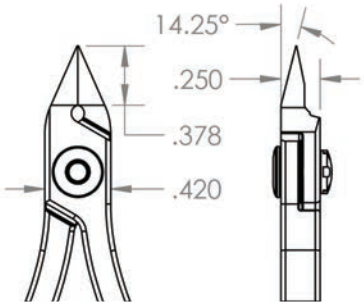

7000 SERIES | MEDIUM HEAD CUTTERS

MADE IN USA | ★★★★★ ULTRA PRECISION

7100 Series **LONG Cushion Grip** - ESD Safe (10^{10} ohms/sq.) **Length 5.75" (144mm)**
7200 Series **MOLDED Grip** - ESD Safe (10^{8} ohms/sq.) **Length 4.75" (119mm)**

ESD SAFE

Medium Oval Head

MADE IN USA

Part#	Grip	Cutting Edge	Maximum Cutting Capacity		
7140E	Long	Semi-flush	16 AWG	.050"	1.25 mm
7240E	Molded				
7141E	Long	Optimum-flush	17 AWG	.045"	1.13 mm
7241E	Molded				
7142E	Long	Lazer-flush	18 AWG	.042"	1.05 mm
7242E	Molded				

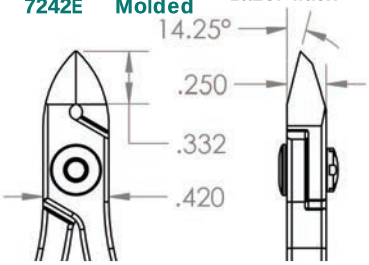

Medium Tapered Head

MADE IN USA

Part#	Grip	Cutting Edge	Maximum Cutting Capacity		
7143E	Long	Semi-flush	16 AWG	.050"	1.25 mm
7243E	Molded				
7144E	Long	Optimum-flush	17 AWG	.045"	1.13 mm
7244E	Molded				
7145E	Long	Lazer-flush	18 AWG	.040"	1.00 mm
7245E	Molded				

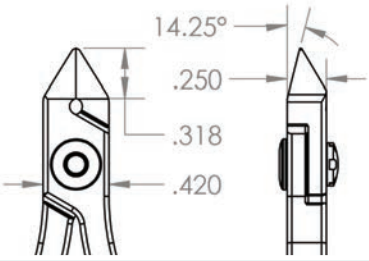

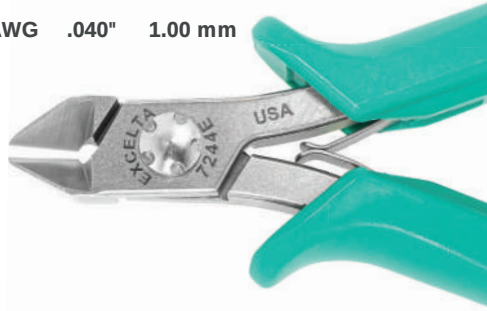

Medium Tapered/Relieved Head

MADE IN USA

Part#	Grip	Cutting Edge	Maximum Cutting Capacity		
7146E	Long	Semi-flush	18 AWG	.042"	1.05 mm
7246E	Molded				
7147E	Long	Optimum-flush	18 AWG	.040"	1.00 mm
7247E	Molded				
7148E	Long	Lazer-flush	19 AWG	.036"	0.90 mm
7248E	Molded				

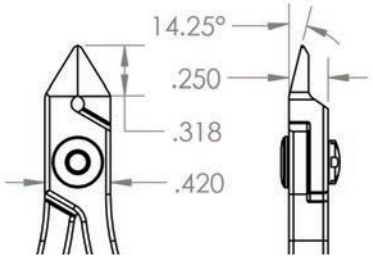

7200 Series **MOLDED Grip** - ESD Safe (10^8 ohms/sq.)

ESD SAFE

Medium Oval Relieved Head ★★★★★

Part#	Grip	Length	Cutting Edge	Maximum Cutting Capacity
7210E	Molded	4.75" (119mm)	Semi-flush	16 AWG .050" 1.25 mm

MADE IN USA

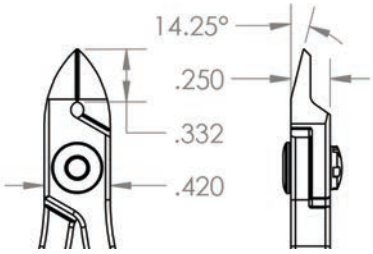

Large Oval Head ★★★★

Part#	Grip	Length	Cutting Edge	Maximum Cutting Capacity
7250E	Molded	5.00" (125mm)	Semi-Flush	14 AWG .050" 1.5 mm
7251E	Molded	5.00" (125mm)	Optimum-Flush	

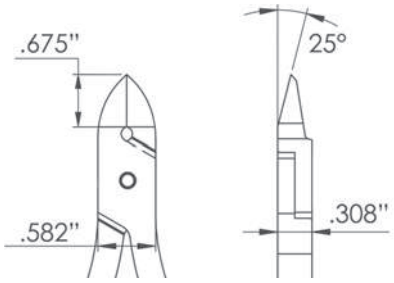

Very Large Oval Head ★★★★

Part#	Grip	Length	Cutting Edge	Maximum Cutting Capacity
7260E	Molded	5.25" (131mm)	Semi-flush	12 AWG .080" 2.0 mm
7261E	Molded	5.25" (131mm)	Optimum-Flush	

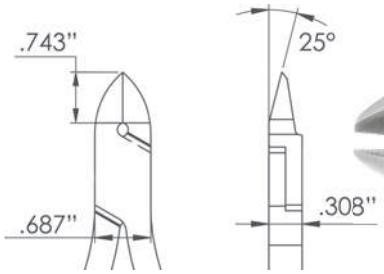

7000 SERIES | TAPERED FINE TIPS

MADE IN USA | ★★★★★ ULTRA PRECISION

7100 Series **Long Cushion Grip** - ESD Safe (10^{10} ohms/sq.)
7200 Series **Molded Grip** - ESD Safe (10^{8} ohms/sq.)
7300 Series **SL Molded Grip** - ESD Safe (10^{8} ohms/sq.)

ESD SAFE

Smallest Fine Tapered Tips

Part#	Grip	Length	Cutting Edge	Maximum Cutting Capacity
7371E	SL Molded	4.25" (106mm)	Lazer-Flush	30 AWG .010" 0.25 mm

MADE IN USA

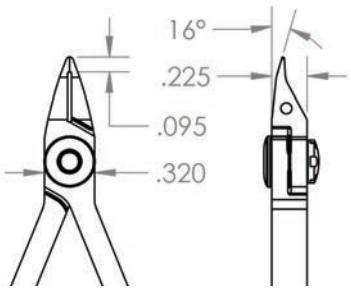

Small Tapered Tips

Part#	Grip	Length	Cutting Edge	Maximum Cutting Capacity
7171E	Long	5.75" (144mm)	Lazer-Flush	30 AWG .010" 0.25 mm
7271E	Molded	5.25" (131mm)		

MADE IN USA

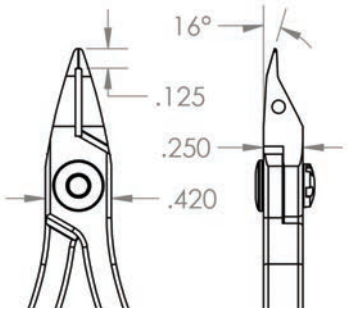

Medium Tapered Tips

Part#	Grip	Length	Cutting Edge	Maximum Cutting Capacity
7170E	Long	6.25" (156mm)	Lazer-Flush	24 AWG .020" 0.50 mm
7270E	Molded	4.75" (119mm)		

MADE IN USA

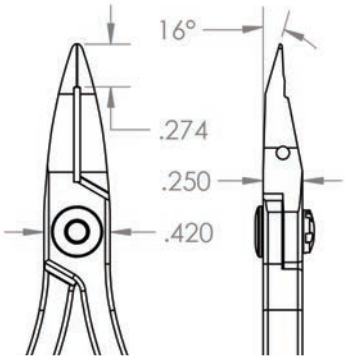

7100 Series **Long Cushion Grip** - ESD Safe (10^{10} ohms/sq.)
7200 Series **Molded Grip** - ESD Safe (10^{8} ohms/sq.)

ESD SAFE

Tapered/Relieved Fine Tips

Part#	Grip	Length	Cutting Edge	Maximum Cutting Capacity
7170EA	Long	6.25" (156mm)	Lazer-Flush	24 AWG .020" 0.50 mm
7270EA	Molded	5.25" (131mm)		

MADE IN USA

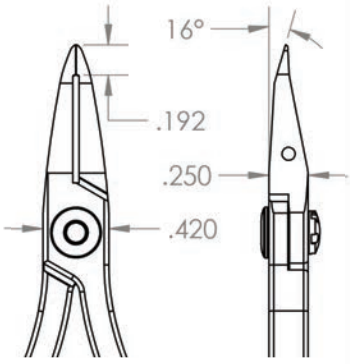

Tapered/Relieved Fine Tips

Part#	Grip	Length	Cutting Edge	Maximum Cutting Capacity
7149E	Long	5.75" (143mm)	Lazer-Flush	22 AWG .025" 0.63 mm
7249E	Molded	5.00" (125mm)		

MADE IN USA

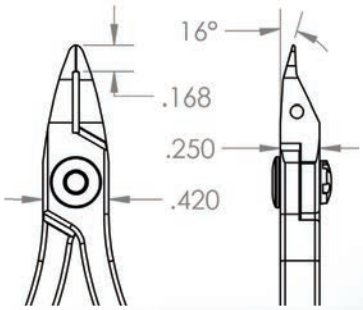

7000 SERIES | ANGULATED CUTTERS

MADE IN USA | ★★★★★ ULTRA PRECISION

7300 Series **SL Molded Grip** - ESD Safe (10^8 ohms/sq.)

ESD SAFE

Small Angulated Head

Part#	Grip	Length	Cutting Edge	Maximum Cutting Capacity
7375E	SL Molded	4.25" (106mm)	Lazer-Flush	30 AWG .010" 0.25 mm

MADE IN USA

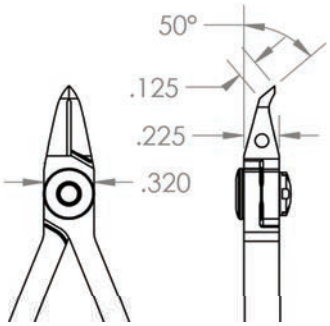

Small Angulated Head

Part#	Grip	Length	Cutting Edge	Maximum Cutting Capacity
7376E	SL Molded	4.25" (106mm)	Lazer-Flush	30 AWG .010" 0.25 mm

MADE IN USA

NEW ITEM

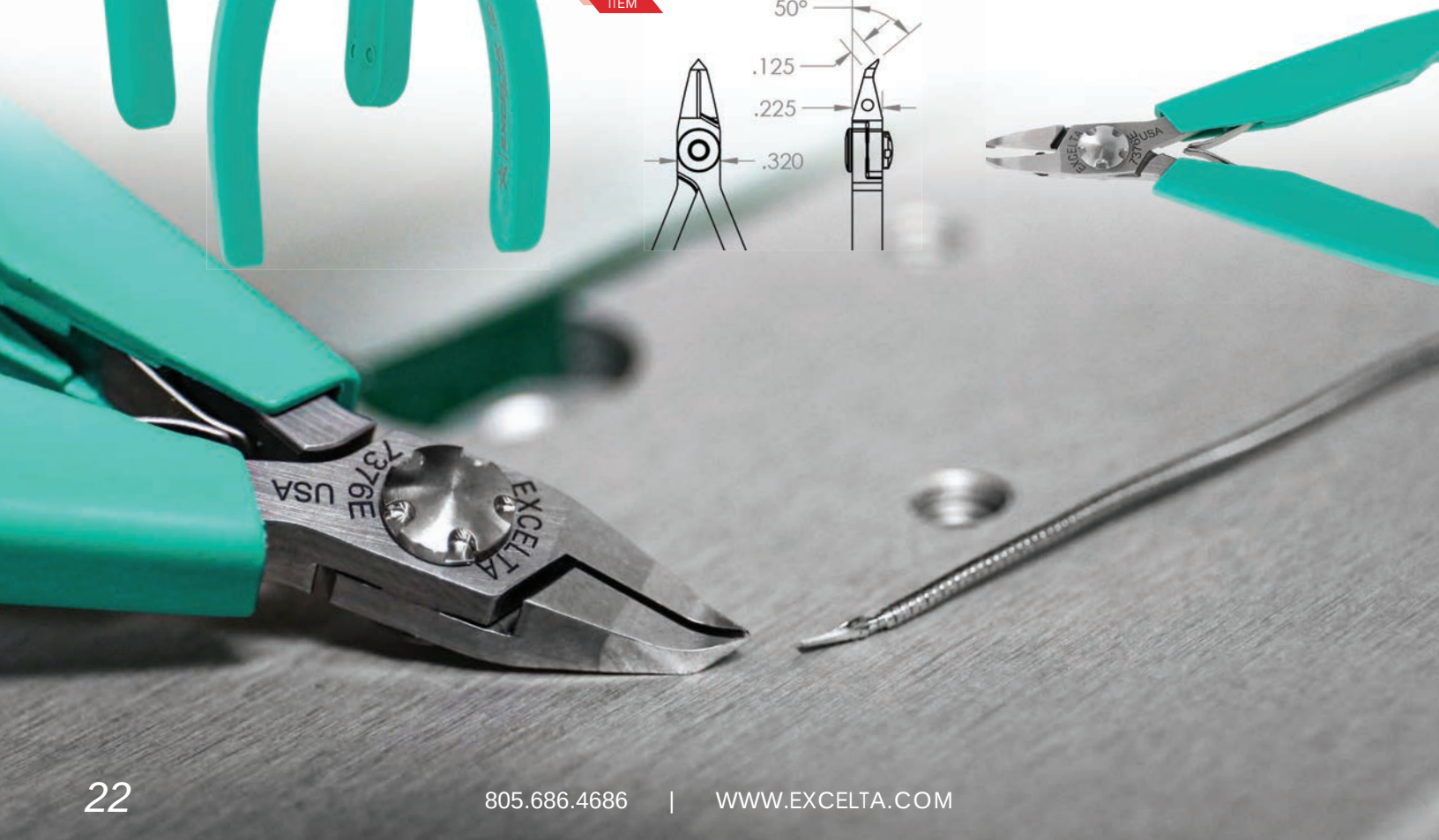

7100 Series **Long Cushion Grip** - ESD Safe (10^{10} ohms/sq.)
7200 Series **Molded Grip** - ESD Safe (10^{8} ohms/sq.)

ESD SAFE

Medium Angulated Head

Part#	Grip	Length	Cutting Edge	Maximum Cutting Capacity
7175E	Long	6.00" (150mm)	Optimum-Flush	25 AWG .018" 0.45 mm
7275E	Molded	4.75" (119mm)		

MADE IN USA

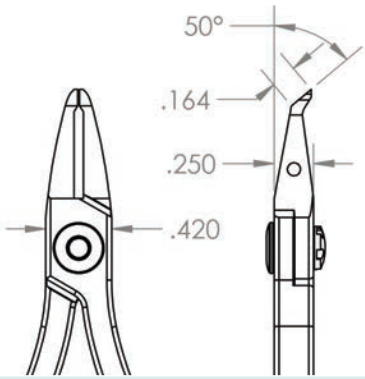

Medium Angulated Head

Part#	Grip	Length	Cutting Edge	Maximum Cutting Capacity
7182E	Long	6.00" (150mm)	Optimum-Flush	22 AWG .025" 0.63 mm
7282E	Molded	5.00" (125mm)		

MADE IN USA

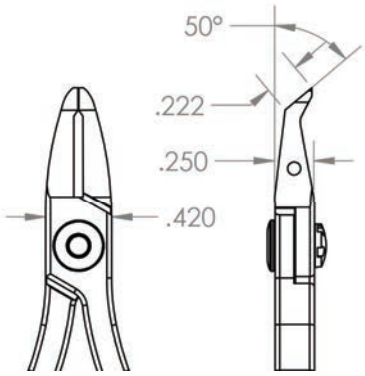

7000 SERIES | ANGULATED CUTTERS

MADE IN USA | ★★★★★ ULTRA PRECISION

7100 Series **Long Cushion Grip** - ESD Safe (10^{10} ohms/sq.)
7200 Series **Molded Grip** - ESD Safe (10^{8} ohms/sq.)

ESD SAFE

Large Angulated Head ★★★★★

Part#	Grip	Length	Cutting Edge	Maximum Cutting Capacity
7172E	Long	6.00" (150mm)	Optimum-Flush	20 AWG .032" 0.80 mm
7272E	Molded	4.75" (119mm)		

MADE IN USA

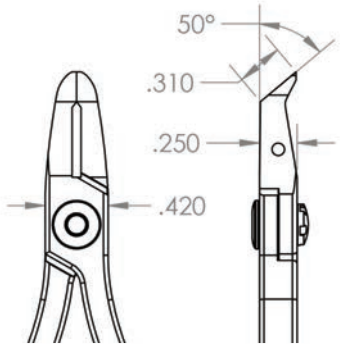

Very Large Angulated Head ★★★★★

Part#	Grip	Length	Cutting Edge	Maximum Cutting Capacity
7104E	Long	6.00" (150mm)	Optimum-Flush	21 AWG .028" 0.70 mm
7204E	Molded	5.00" (125mm)		

MADE IN USA

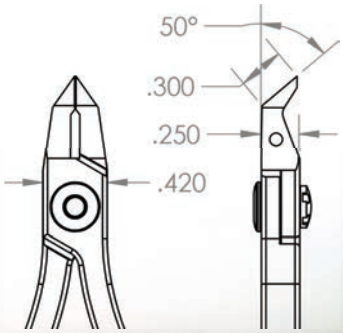

EI Series **Molded Grip** - ESD Safe (10^8 ohms/sq.)

ESD SAFE

Very Large Angulated Head ★★★

Part#	Grip	Length	Cutting Edge	Maximum Cutting Capacity
90EI	Molded	4.75" (119mm)	Optimum-Flush	22 AWG .025" 0.63 mm

NEW ITEM

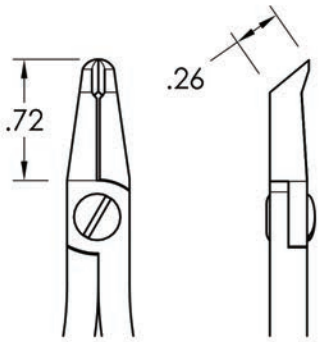

Very Large Angulated Head ★★★

Part#	Grip	Length	Cutting Edge	Maximum Cutting Capacity
67EI	Molded	4.75" (119mm)	Optimum-Flush	22 AWG .025" 0.63 mm

NEW ITEM

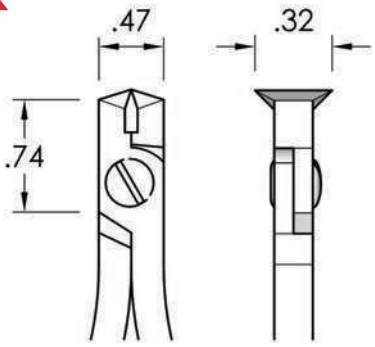

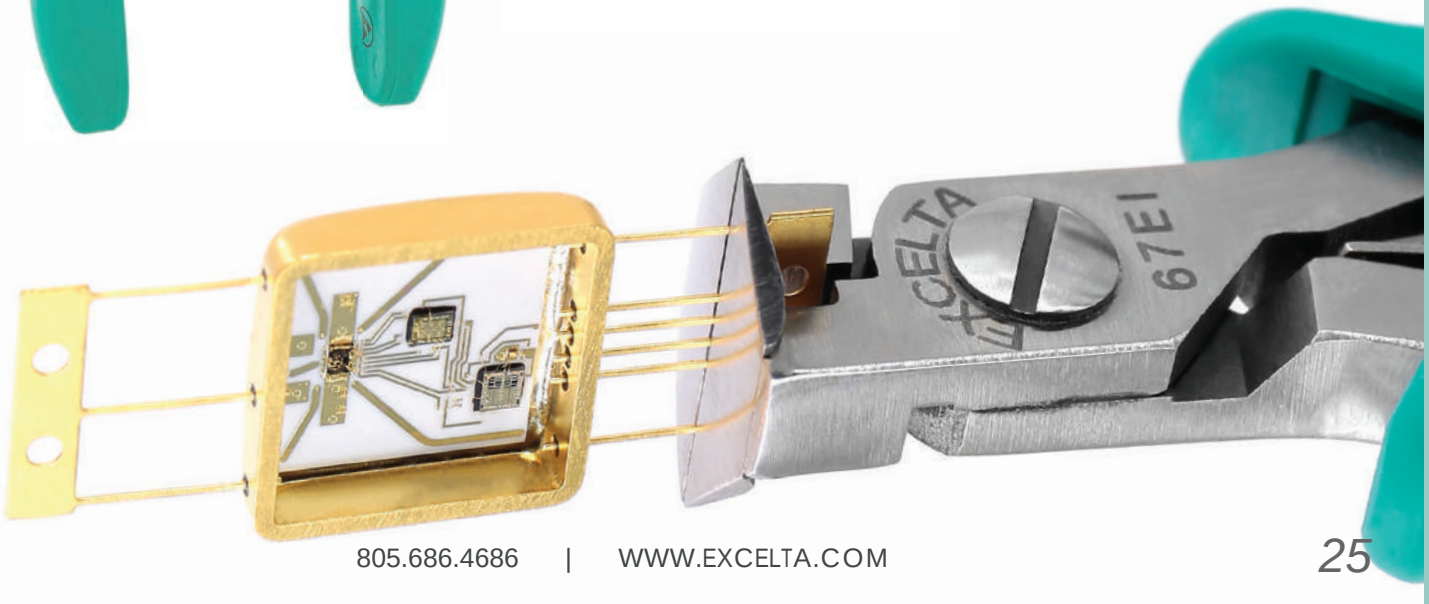

7000/EI SERIES | TRANSVERSE CUTTERS

★★★★★ ULTRA PRECISION
★★★ HIGH PRECISION

7100 Series **Long Cushion Grip** - ESD Safe (10^{10} ohms/sq.)
7200 / EI Series **Molded Grip** - ESD Safe (10^{8} ohms/sq.)

ESD SAFE

Small Transverse Head ★★★★★

Part#	Grip	Length	Cutting Edge	Maximum Cutting Capacity
7174E	Long	6.00" (150mm)	Lazer-Flush	24 AWG .020" 0.50 mm
7274E	Molded	4.75" (119mm)		

MADE IN USA

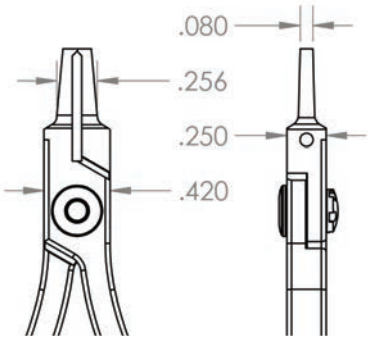

Medium Transverse Head ★★★★★

Part#	Grip	Length	Cutting Edge	Maximum Cutting Capacity
7173E	Long	6.00" (150mm)	Lazer-Flush	24 AWG .020" 0.50 mm
7273E	Molded	4.75" (119mm)		

MADE IN USA

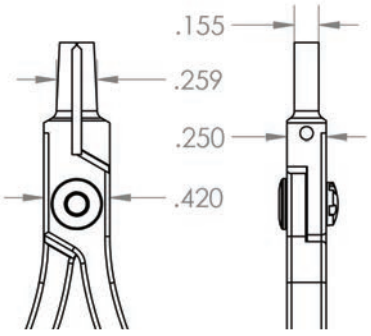

Medium Transverse Head ★★★

Part#	Grip	Length	Cutting Edge	Maximum Cutting Capacity
73E-I	Molded	5.5" (137.5mm)	Lazer-Flush	22 AWG .025" 0.63 mm

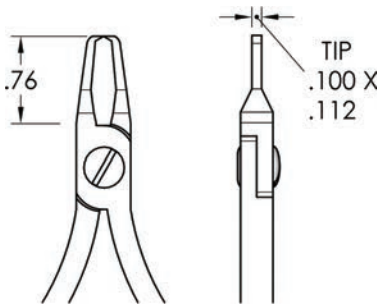

2800 Series **Standard Cushion Grip** - ESD Safe (10^{10} ohms/sq.)
2800 CR Cleanroom Safe - No Grip - Serrated Handles

ESD SAFE

Small Tapered Head

Part#	Grip	Length	Cutting Edge	Maximum Cutting Capacity
2876EHT	Standard	4.25" (106mm)	Semi-Flush	30 AWG .010" 0.25 mm (Hard Wire)

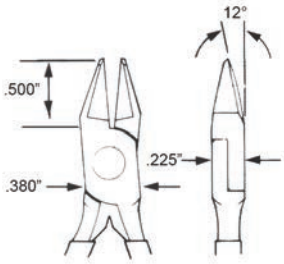

Small Round Head

Part#	Grip	Length	Cutting Edge	Maximum Cutting Capacity
2899EHT	Standard	4.50" (112mm)	Semi-Flush	28 AWG .012" 0.30 mm
2899EHT-CR	No Grip	4.50" (112mm)	Semi-Flush	28 AWG .012" 0.30 mm (Hard Wire)

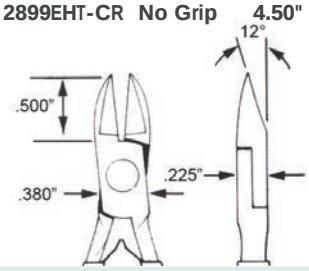

Medium Round Head

Part#	Grip	Length	Cutting Edge	Maximum Cutting Capacity
2897EHT	Standard	4.50" (112mm)	Semi-Flush	24 AWG .020" 0.50 mm (Hard Wire)

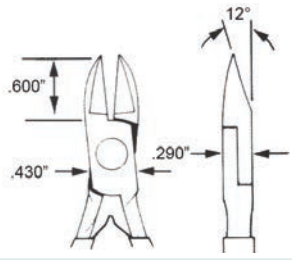

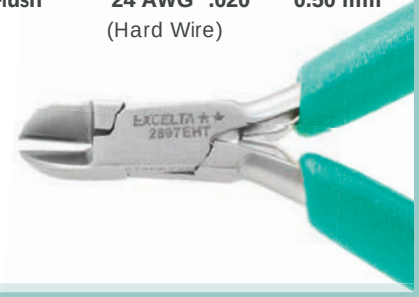

Large Round Head

Part#	Grip	Length	Cutting Edge	Maximum Cutting Capacity
2896EHT	Standard	5.5" (137mm)	Semi-Flush	20 AWG .032" 0.80 mm (Hard Wire)

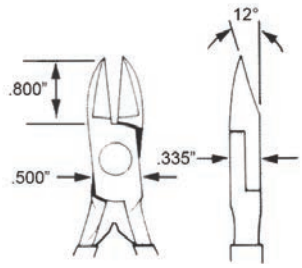

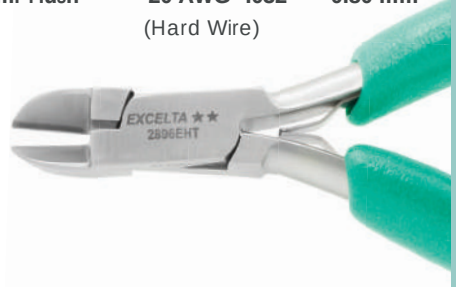

STANDOFF SHEAR CUTTERS

★★★★★ ULTRA PRECISION

SHEAR CUTTERS

Application specific shear cutters are used to shear off leads on printed circuit boards and leave a specific length of the lead protruding. There are a variety of options shown and all can be modified to your exact specifications.

500 Series **Molded Grip** - Surface Resistivity 10^8 ohms/sq.
500L Series **Long Cushion Grip** - ESD Safe (10^{10} ohms/sq.)

ESD SAFE

Relieved Fine Tips — Length 5" (125mm)

Part#	Grip	Maximum Cutting Capacity
530EA-US	Molded	22 AWG .025" 0.63 mm

Please specify cut length when ordering (0.30", 0.40", 0.50", 0.60", or 'CUSTOM'). Example: 530EA-US-030

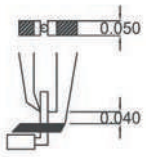

Medium Fine Tips — Length 6" (150mm)

Part#	Grip	Maximum Cutting Capacity
530E-5-USL	Long	22 AWG .025" 0.63 mm

Please specify cut length when ordering (0.30", 0.40", 0.50", 0.60", or 'CUSTOM'). Example: 530E-5-USL-040

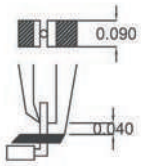

Smallest Fine Tips — Length 5" (125mm)

Part#	Grip	Maximum Cutting Capacity
530E-US	Molded	22 AWG .025" 0.63 mm

Please specify cut length when ordering (0.30", 0.40", 0.50", 0.60", or 'CUSTOM'). Example: 530E-US-040

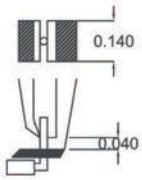

Small Fine Tips - Adjustable — Length 6" (150mm)

Part#	Grip	Maximum Cutting Capacity
530E-15-US	Molded	22 AWG .025" 0.63 mm

Replacement Slide 530E-15-US-RSS

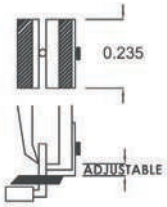

500/900 SERIES | STANDOFF SHEAR CUTTERS

MADE IN USA | ★★★★★ ULTRA PRECISION

500 Series **Molded Grip** - Surface Resistivity 10^8 ohms/sq.
900 Series **Cushion Grip** - Surface Resistivity 10^{10} ohms/sq.

ESD SAFE

Long Head — Length 5.75" (144mm)

Part#	Grip	Maximum Cutting Capacity
530E-4-US	Molded	22 AWG .025" 0.63 mm

Please specify cut length when ordering (0.30", 0.40", 0.50", 0.60", or 'CUSTOM'). Example: 530E-4-US-040

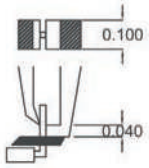

Thin Head — Length 6" (150mm)

Part#	Grip	Maximum Cutting Capacity
907-4	Cushion	20 AWG .032" 0.80mm

Please specify cut length when ordering (0.30", 0.40", 0.50", 0.60", or 'CUSTOM'). Example: 907-4-040

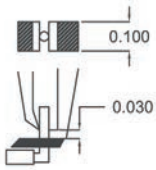

Large Head — Length 6" (150mm)

Part#	Grip	Maximum Cutting Capacity
907-1	Cushion	22 AWG .025" 0.63 mm

Please specify cut length when ordering (0.30", 0.40", 0.50", 0.60", or 'CUSTOM'). Example: 907-1-040

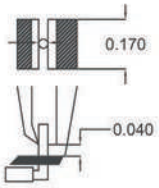

900 Series **Cushion Grip** - Surface Resistivity 10^{10} ohms/sq.

ESD SAFE

Grooved Head — Length 5.25" (131mm)

Part#	Grip	Maximum Cutting Capacity
907-5	Cushion	22 AWG .025" 0.63 mm

Please specify cut length when ordering (0.30", 0.40", 0.50", 0.60", or 'CUSTOM'). Example: 907-5-040

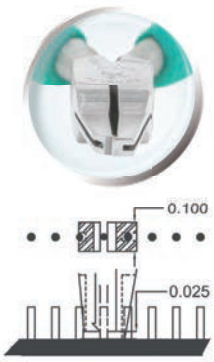

Large Head — Length 5.5" (138mm)

Part#	Grip	Maximum Cutting Capacity
903	Cushion	18 AWG .040" 1.00 mm

Please specify cut length when ordering (0.30", 0.40", 0.50", 0.60", or 'CUSTOM'). Example: 903-040

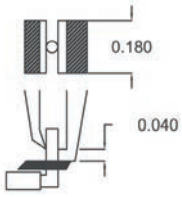

Large Narrow Head — Length 5.5" (138mm)

Part#	Grip	Maximum Cutting Capacity
903A	Cushion	18 AWG .040" 1.00 mm

Please specify cut length when ordering (0.30", 0.40", 0.50", 0.60", or 'CUSTOM'). Example: 903A-040

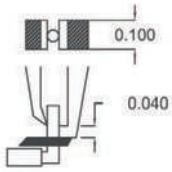

500/900 SERIES | STANDOFF SHEAR CUTTERS

MADE IN USA | ★★★★★ ULTRA PRECISION

500 Series **Molded Grip** - Surface Resistivity 10^8 ohms/sq.
900 Series **Cushion Grip** - Surface Resistivity 10^{10} ohms/sq.

ESD SAFE

Small Angled Head — Length 5.5" (138mm)

Part#	Grip	Maximum Cutting Capacity
549E-US	Molded	22 AWG .025" 0.63 mm

Please specify cut length when ordering (0.30", 0.40", 0.50", 0.60", or 'CUSTOM'). Example: 549E-US-040

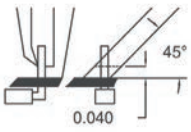

Large Angled Head — Length 5.75" (144mm)

Part#	Grip	Maximum Cutting Capacity
907-59	Cushion	18 AWG .040" 1.00 mm

Please specify cut length when ordering (0.30", 0.40", 0.50", 0.60", or 'CUSTOM'). Example: 907-59-040

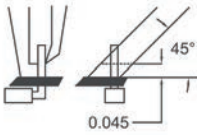

Very Large Head — Length 5.25" (131mm)

Part#	Grip	Maximum Cutting Capacity
509-42A-US	Molded	22 AWG .025" 0.63 mm

Please specify cut length when ordering (0.30", 0.40", 0.50", 0.60", or 'CUSTOM'). Example: 509-42A-US-040

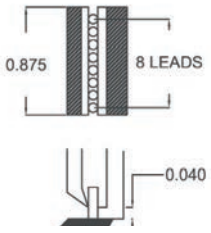

Very Large Head — Length 5.5" (138mm)

Part#	Grip	Maximum Cutting Capacity
907-42A	Cushion	24 AWG .020" 0.50 mm

Please specify cut length when ordering (0.30", 0.40", 0.50", 0.60", or 'CUSTOM'). Example: 907-42A-040

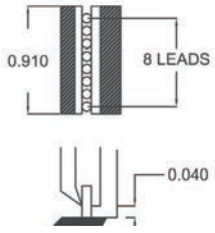

Cushion Grip - Surface Resistivity 10^{10} ohms/sq.

ESD SAFE

51I-6 - Cable Cutter

Precision cable cutter is recommended for cutting stranded soft cables and wire up to .5"(12.5mm) in diameter. The locking device keeps cutting jaws in closed position when not in use. The tool is 6"(150mm) long and made of Stainless Steel.

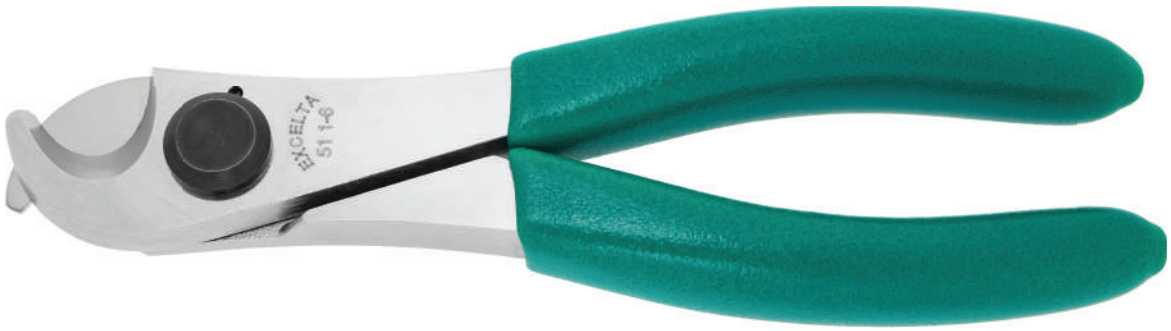

51I-6DP - Depanelizer

Depanelizing tool has a thin jaw designed to cut the tabs on PC boards. Longer handles provide more leverage when cutting. The head is designed to fit a .07"(1.75mm) or larger slot, is 6"(150mm) long and made of Stainless Steel it features a locking device which keeps cutting jaws closed at rest.

PRECISION PLIERS

Excelta makes a wide range of pliers for general electronics repair and fine mechanical work. Precision lap joints ensure precise jaw alignment. ESD safe grips and available ergonomic handles make finding the exact plier you need easier than ever.

★★★★★ ULTRA PRECISION
★★★ HIGH PRECISION
★★ FINE PRECISION

Plier Nose Shape

Chain Nose | Needle Nose | Bent Nose | Flat Nose | Round Nose

The Size

Miniature Pliers are self-opening and have the smallest tips. They are made of stainless steel to prevent oxidation, are cleanroom safe and the overall length is 3" (75mm).

Small Pliers feature dual leaf springs and soft cushion ESD safe (10^{10} ohms/sq) grips. They are made of stainless steel to prevent oxidation and are 4.75"(120mm) in overall length.

Small Ergonomic Pliers feature dual leaf springs and soft cushion ESD safe (10^{10} ohms/sq) grips. They are made of stainless steel to prevent oxidation and are 6"(150mm) in overall length.

Medium Pliers are offered in three different precision levels:

★★★★★ The **700 series** features ESD safe (10^{8}ohms/sq) molded grips, polished and hand-finished jaws and are made in the USAof carbon steel with flame hardened tips. The overall length is 5" (125mm).

★★★ The **11 series** features cushion ESD safe (10^{10}ohms/sq) grips and dual leaf springs, made of stainless steel with flame hardened tips. The overall length is 4.8" (120mm).

★★ The **2800 series** feature molded ESD Safe (10^{8}ohms/sq) grips and dual leaf springs, and made of stainless steel. The overall length is 5.75"(145mm). The 2800L series are 6" (150mm) in overall length and feature cushioned ESD safe grips (10^{10}ohms/sq) and dual leaf springs.

Large Pliers

★★ The **2900 series** Large Pliers all feature dual leaf springs and soft cushion ESD safe (10^{10}ohms/sq) grips. They are made of stainless steel. The overall length is 6.5" (165mm).

Tip Modifications

D **Single Cut Serrations** can be added to the inside jaws of most plier tips. Serrations help hold parts when handling and manipulating. Example: 2949D

DX **Double Cut Serrations** can be added to the inside jaws of most pliers. These serrations are finer and should be used when handling small parts and wires. Example: 2949DX

Specialty Pliers

Soft Tip Replaceable Jaw Pliers - Soft tips are used for straightening wire or leads without nicking or scratching the lead.

Wide Jaw Pliers - Have very wide jaws for straightening, picking, & placing wide items. The jaws are replaceable.

Concave/Convex Pliers - Feature one concave jaw and one round jaw for bending/forming wires or leads.

MINIATURE | STAINLESS STEEL

Self-Opening Pliers | ★★ FINE PRECISION

These miniature pliers are ideal for handling small items too large to handle with tweezers, but too small to handle with conventional pliers. They are open at rest and cleanroom safe.

Miniature Chain Nose — Length 3" (75mm)

Part#	Jaw Finish
382	Smooth

Miniature Needle Nose — Length 3" (75mm)

Part#	Jaw Finish
383	Smooth

Miniature Curved Nose — Length 3" (75mm)

Part#	Jaw Finish
381	Smooth

Miniature Bent Nose — Length 3" (75mm)

Part#	Jaw Finish
384	Smooth

Miniature Round Nose — Length 3" (75mm)

Part#	Jaw Finish
386	Smooth

Miniature Flat Nose — Length 3" (75mm)

Part#	Jaw Finish
385	Smooth

2600 Series **Standard Cushion Grip** - Surface Resistivity - 10^{10} ohms/sq

ESD SAFE

Small Chain Nose — Length 4.75" (119mm)

Part#	Grip	Jaw Finish
2644	Standard	Smooth
2644D	Standard	Serrated

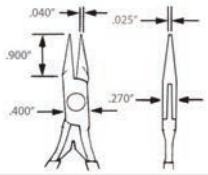

Small Needle Nose — Length 4.75" (119mm)

Part#	Grip	Jaw Finish
2647	Standard	Smooth
2647D	Standard	Serrated

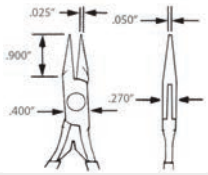

Small Bent Nose — Length 4.75" (119mm)

Part#	Grip	Jaw Finish
2629	Standard	Smooth

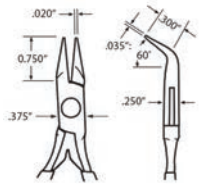

Small Flat Nose — Length 4.75" (119mm)

Part#	Grip	Jaw Finish
2642	Standard	Smooth

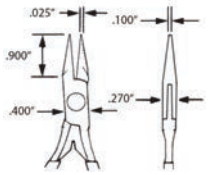

Small Round Nose — Length 4.75" (119mm)

Part#	Grip	Jaw Finish
2643	Standard	Smooth

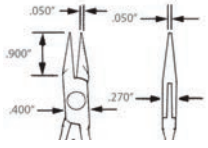

SMALL HEAD | STAINLESS STEEL

ERGONOMIC GRIP PLIERS | ★★FINE PRECISION

2600S Series **Long Cushion Grip** - Surface Resistivity 10^{10} ohms/sq

ESD SAFE

Small Chain Nose — Length 6.25" (156mm)

Part#	Grip	Jaw Finish
2644S	Long	Smooth
2644SD	Long	Serrated

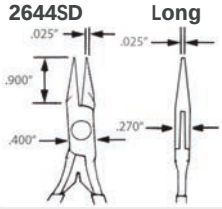

Small Needle Nose — Length 6.25" (156mm)

Part#	Grip	Jaw Finish
2647S	Long	Smooth
2647SD	Long	Serrated

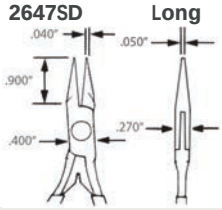

Small Bent Nose — Length 6.25" (156mm)

Part#	Grip	Jaw Finish
2629S	Long	Smooth
2629SD	Long	Serrated

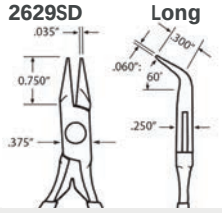

Small Flat Nose — Length 6.25" (156mm)

Part#	Grip	Jaw Finish
2642S	Long	Smooth
2642SD	Long	Serrated

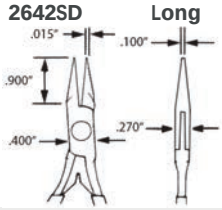

Small Round Nose — Length 6.25" (156mm)

Part#	Grip	Jaw Finish
2643S	Long	Smooth

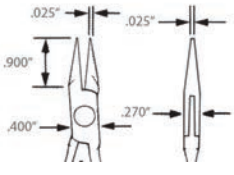

Molded Grip - Surface Resistivity 10^8 ohms/sq

ESD SAFE

Small Chain Nose — Length 5.5" (137.5mm)

Part#	Grip	Jaw Finish
44I	Molded	Smooth

NEW ITEM

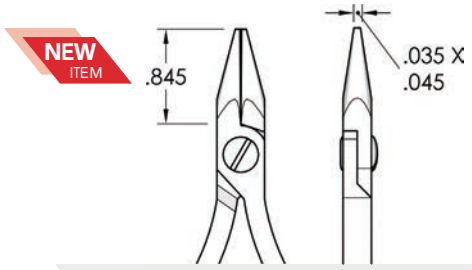

Small Needle Nose — Length 5.5" (137.5mm)

Part#	Grip	Jaw Finish
47I	Molded	Smooth

NEW ITEM

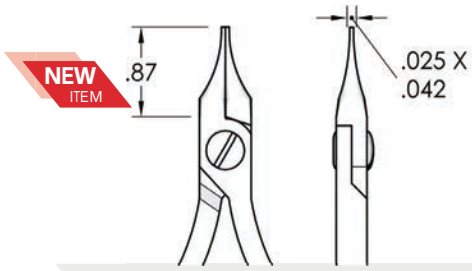

Small Flat Nose — Length 5.5" (137.5mm)

Part#	Grip	Jaw Finish
42I	Molded	Smooth

NEW ITEM

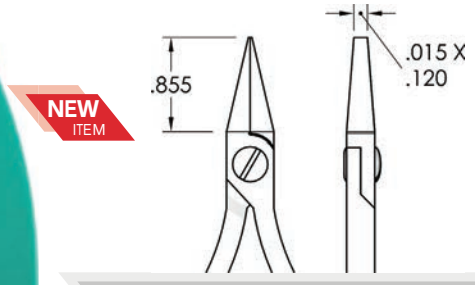

Small Round Nose — Length 5.5" (137.5mm)

Part#	Grip	Jaw Finish
43I	Molded	Smooth

NEW ITEM

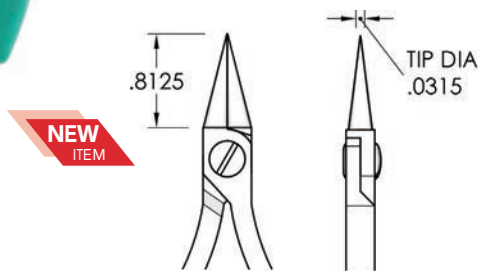

MEDIUM HEAD | STAINLESS/CARBON STEEL

Standard Pliers

★★★★★ ULTRA PRECISION
★★★ HIGH PRECISION

743 & 744 - Molded Grip - Surface Resistivity - 10^8 ohms/sq
11I & 11DI - Cushion Grip - Surface Resistivity 10^{10} ohms/sq

ESD SAFE

Medium Chain Nose ★★★★★ Length 5" (125mm)

Part#	Grip	Jaw Finish	Material
744	Molded	Smooth	Carbon Steel

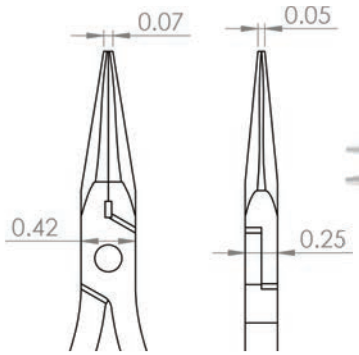

Medium Round Nose ★★★★★ Length 5" (125mm)

Part#	Grip	Jaw Finish	Material
743	Molded	Smooth	Carbon Steel

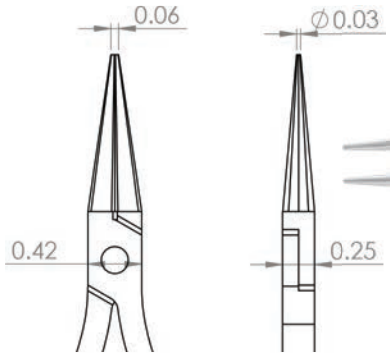

Medium Chain Nose ★★★ Length 4.8" (120mm)

Part#	Grip	Jaw Finish	Material
11DI	Cushion	Serrated	Stainless Steel
11I	Cushion	Smooth	Stainless Steel

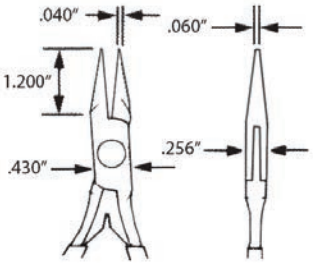

2800 Series **Molded Grip** - Surface Resistivity 10^8 ohms/sq
2800L Series **Long Cushion Grip** - Surface Resistivity 10^{10} ohms/sq
2800SL Series **SL Molded Grip** - ESD Safe (10^8 ohms/sq.)

ESD SAFE

Medium Chain Nose

Part#	Grip	Jaw Finish	Length
2844	Molded	Smooth	5.75" (144mm)
2844D	Molded	Serrated	5.75" (144mm)
2844L	Long	Smooth	6.25" (156mm)
2844LD	Long	Serrated	6.25" (156mm)
2844SL	SL Molded	Smooth	5.25" (133mm)
2844SLD	SL Molded	Serrated	5.25" (133mm)

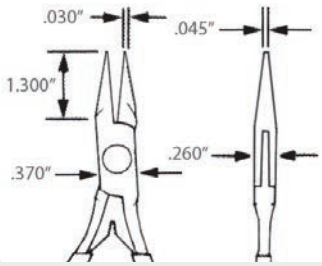

Medium Needle Nose

Part#	Grip	Jaw Finish	Length
2847	Molded	Smooth	5.75" (144mm)
2847D	Molded	Serrated	5.75" (144mm)
2847L	Long	Smooth	6.25" (156mm)
2847LD	Long	Serrated	6.25" (156mm)
2847SL	SL Molded	Smooth	5.25" (133mm)
2847SLD	SL Molded	Serrated	5.25" (133mm)

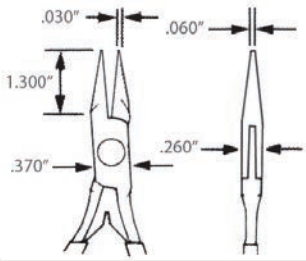

Medium Bent Nose

Part#	Grip	Jaw Finish	Length
2829	Molded	Smooth	5.75" (144mm)
2829L	Long	Smooth	6" (150mm)
2829LD	Long	Serrated	6" (150mm)
2829SL	SL Molded	Smooth	5.25" (133mm)
2829SLD	SL Molded	Serrated	5.25" (133mm)

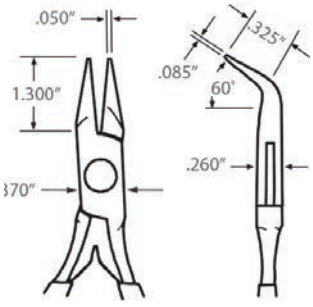

MEDIUM HEAD | STAINLESS STEEL

STANDARD PLIERS | ★★FINE PRECISION

2800 Series **Molded Grip** - Surface Resistivity 10^8 ohms/sq
2800L Series **Long Cushion Grip** - Surface Resistivity 10^{10} ohms/sq
2800SL Series **SL Molded Grip** - ESD Safe (10^8 ohms/sq.)

ESD SAFE

Medium Flat Nose

Part#	Grip	Jaw Finish	Length
2842	Molded	Smooth	5.75" (144mm)
2842D	Molded	Serrated	5.75" (144mm)
2842L	Long	Smooth	6.25" (156mm)

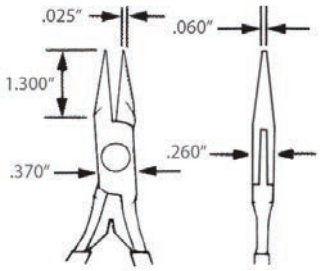

Medium Flat Nose

Part#	Grip	Jaw Finish	Length
2818	Molded	Smooth	5.75" (144mm)

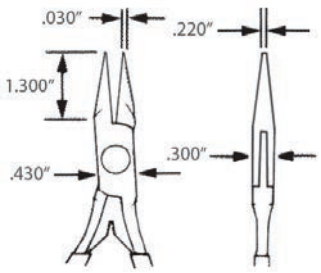

Medium Round Nose

Part#	Grip	Jaw Finish	Length
2843	Molded	Smooth	5.75" (144mm)
2843L	Long	Smooth	6.25" (156mm)
2843SL	SL Molded	Smooth	5.50" (156mm)

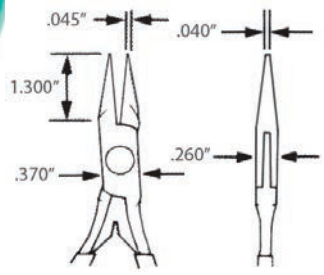

2900 Series **Cushion Grip** - Surface Resistivity 10^{10} ohms/sq

ESD SAFE

Large Chain Nose — Length 6.25" (156mm)

Part#	Grip	Jaw Finish
2949	Cushion	Smooth

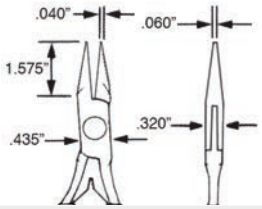

Large Needle Nose — Length 6.5" (163mm)

Part#	Grip	Jaw Finish
2910	Cushion	Smooth

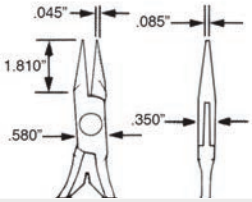

Large Needle Nose — Length 5.75" (144mm)

Part#	Grip	Jaw Finish
2905	Cushion	Smooth

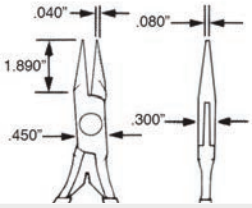

Large 90° Bent Nose — Length 5.75" (144mm)

Part#	Grip	Jaw Finish
2904	Cushion	Smooth

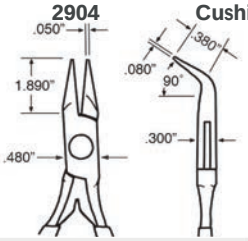

Large 45° Bent Nose — Length 6.5" (163mm)

Part#	Grip	Jaw Finish
2914	Cushion	Smooth

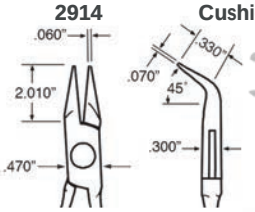

Corrosion-resistant stainless steel can be autoclaved up to 600° F.

Medium Chain Nose ★★ Length 5.75" (144mm)

Part#	Jaw Finish
2844-CR	Smooth
2844D-CR	Serrated

NEW ITEM

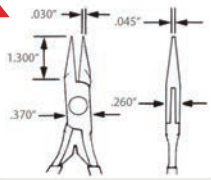

Medium Needle Nose ★★ Length 5.75" (144mm)

Part#	Jaw Finish
2847-CR	Smooth
2847D-CR	Serrated

NEW ITEM

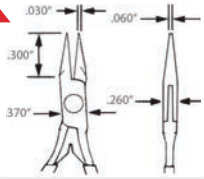

Medium Bent Nose ★★ Length 5.75" (144mm)

Part#	Jaw Finish
2829-CR	Smooth
2829D-CR	Serrated

NEW ITEM

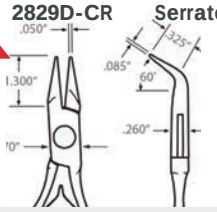

Medium Flat Nose ★★ Length 5.75" (144mm)

Part#	Jaw Finish
2842-CR	Smooth
2842D-CR	Serrated

NEW ITEM

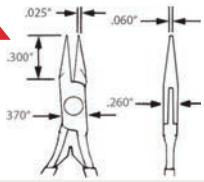

Medium Round Nose ★★ Length 5.75" (144mm)

Part#	Jaw Finish
2843-CR	Smooth

NEW ITEM

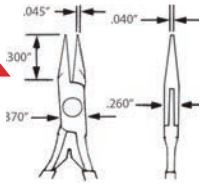

500 Series **Molded Grip** - Surface Resistivity 10^8 ohms/sq

ESD SAFE

Medium Round Blunt Nose — Length 5.75" (144mm)

Part#	Grip	Jaw Material
531-US	Molded	Nylon
531A-US	Molded	Acetal
531B-US	Molded	Brass

Medium Square Blunt Nose — Length 5.75" (144mm)

Part#	Grip	Jaw Material
532-US	Molded	Acetal
532B-US	Molded	Brass

Medium Flat/Round Nose — Length 6" (150mm)

Part#	Grip	Jaw Material
533-US	Molded	Steel/Acetal

SPECIALTY | CARBON STEEL

WIDE JAW PLIERS CONCAVE/CONVEX

★★★★★ ULTRA PRECISION

500 Series **Molded Grip** - Surface Resistivity 10^8 ohms/sq

ESD SAFE

Medium Wide Nose

Part#	Grip	Jaw Material	Length
508-US	Molded	Carbon Steel	6.25" (156mm)
508B-US	Molded	Brass	5.5" (138mm)
508D-US	Molded	Acetal	5.5" (138mm)

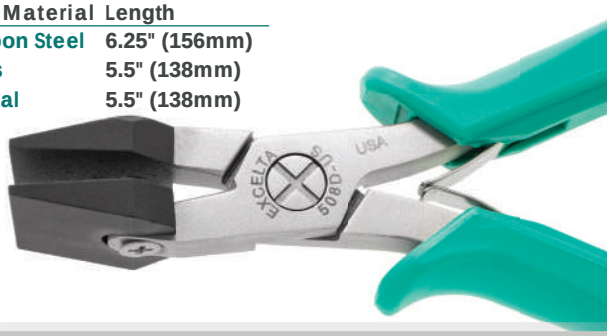

Medium Wide Nose — Length 5.5” (138mm)

Part#	Grip	Jaw Material
508C-US	Molded	Carbon Steel

Small Concave/Convex Nose — Length 5.25” (131mm)

Part#	Grip	Jaw Material
500-101-US	Molded	Carbon Steel

Medium Concave/Convex Nose — Length 5.5” (138mm)

Part#	Grip	Jaw Material
500-101A-US	Molded	Carbon Steel

2900 Series **Cushion Grip** - Surface Resistivity 10^{10} ohms/sq

2900 Series ★★ **Tubing Cutters (Replaceable Blade)** **Length 5.25" (131mm)**

These tubing cutters give a nice clean square cut to a variety of soft tubing materials for inserting fittings, couplings and quick release valves. The stainless steel blades are replaceable and come with soft cushioned ESD safe grips (10^{10} ohms/sq). They will cut most types of medical tubing including silicone, rubber, vinyl, nylon, polyurethane, polypropylene, polyethylened, Tygon®, Bio-Sik®, Autoprene® and Viton®. Replacement Blade 2922-14-X.

Part#	O.D. Tubing
2922-18	.13" (3.25mm)
2922-14	.25" (6.25mm)
2922-38	.38" (9.5mm)

ESD SAFE

51-T ★★★ **Tubing Cutter** **Length 7" (175mm)**

These tubing cutters are stainless steel and offer a smooth clean shear cut on plastic tubing. The cutting capacity is .38"(9.5mm) and they feature an ergonomic plastic molded handle with a locking feature to keep the jaws closed while idle.

379 SERIES ★★ **Tubing Expanders** **Length 5" (125mm)**

These stainless steel reverse action pliers have been specifically designed to expand the end of flexible tubing for inserting into plastic or metal fittings and connectors. As the handles are squeezed, the tips separate.

Part#	Tube I.D.	Expanded I.D.
379A	.13" (3.25mm)	.19" (4.75mm)
379B	.10" (2.50mm)	.13" (3.25mm)
379C	.07" (1.75mm)	.10" (2.50mm)

CUSTOM DESIGN SPECIALS

★★★★★ ULTRA PRECISION

As the leader in tool technology, Excelta knows every application is unique. Our Custom Design facility can work from your schematic to manufacture any tool to your specifications. Or, if you prefer, our experienced designers can diagnose your needs and design the tool "Precisely Right" for your unique application.

Whether you need a single tool to handle special parts under unique conditions, or a supply of custom tools to crimp, cut, place or extract parts, Excelta's Custom Design Service has the experience, ingenuity and capability to meet your needs.

The following pages include Excelta tools that have been designed with a very special application in mind. If you don't see the tool you're looking for, contact our Custom Design Department at **(805) 686-4686** or log on to **www.exceltacustomtools.com** and we will design the custom tool to fit your application.

500 Series **Molded Grip** - Surface Resistivity - 10^8 ohms/sq
900 Series **Cushion Grip** - Surface Resistivity - 10^{10} ohms/sq

ESD SAFE

500-108-US — 5.5” (137mm)

Designed to bend leads to 45° then cut the lead to .050” keeping component in place when soldering. Recommended cutting capacity is .025” (.63mm) dia. soft wire. Featuring a molded ergonomic grip with dual leaf springs.

930E-1 — 5.5” (137mm)

Designed to cut leads to .060” (1.5mm) then bend the lead keeping the component in place when soldering. Cutting capacity is .032” (.8mm) dia. soft wire. Featuring soft cushioned ergonomic grips with dual leaf springs.

530E-1-US — 5” (125mm)

Designed to cut leads to .060” (1.5mm) from the PC board, then bend the lead to 30° keeping components in place when soldering. Cutting capacity is .025” (.63mm) dia. soft wire. Featuring molded ergonomic grips with dual leaf springs.

500-88-US — 5” (125mm)

Designed to form a consistent standoff and cut the lead to length on most popular radial lead components. Cutting capacity is .025” (.63mm) dia. soft wire. Featuring a molded ergonomic grip with dual leaf springs.

907 — 6” (150mm)

Designed to cut leads to .030” (.75mm) and swages the end of the lead to prevent it from falling out of the P.C. board. Cutting capacity is .032” (.8mm) dia. soft wire. Featuring soft cushioned ergonomic grips with dual leaf springs.

500-89-US — 5.5” (137mm)

Dog leg lead forming plier/cutter is designed to increase or decrease the center dimension on radial lead components. The added shear cutter saves component prep time. Cutting capacity is .025” (.63mm) dia. soft wire. Featuring a molded ergonomic grip with dual leaf springs.

500 Series **Molded Grip** - Surface Resistivity - 10^8 ohms/sq
900 Series **Cushion Grip** - Surface Resistivity - 10^{10} ohms/sq

ESD SAFE

500-89B-US — 5.5" (137mm)

Dog leg lead forming plier/cutter is designed to increase or decrease the center dimension on radial lead components. The added shear cutter saves component prep time. Cutting capacity is .025" (.63mm) dia. soft wire. Featuring a molded ergonomic grip and dual leaf springs.

900-88B — 5.75" (144mm)

This stress relief forming plier/cutter is designed to form stress relief and cut leads to a specific dimension in one easy step. Cutting capacity is .020" (.5mm) dia. soft wire. Featuring soft cushioned ergonomic grips with dual leaf springs.

907-88 — 6" (150mm)

This stress relief forming plier/cutter is designed to form a standoff and cut leads to length on most popular radial lead components. Cutting capacity is .030" (.75mm) dia. soft wire. Featuring soft cushioned ergonomic grips with dual leaf springs.

907-89 — 5.75" (144mm)

Dog leg lead forming plier/cutter is designed to increase or decrease the center dimension on radial lead components. The added shear cutter saves component prep time. Cutting capacity is .030" (.75mm) dia. soft wire. Featuring soft cushioned ergonomic grips with dual leaf springs.

907-88C — 6" (150mm)

The smaller design of this tool will "Standoff" the component closer to the PC board. The added Shear cutter saves on component prep time. Cutting capacity is .025" (.63mm) dia. soft wire. Featuring soft cushioned ergonomic grips with dual leaf springs.

500 Series **Molded Grip** - Surface Resistivity - 10^8 ohms/sq
900 Series **Cushion Grip** - Surface Resistivity - 10^{10} ohms/sq

ESD SAFE

554-TXC-US — 5.5" (137mm)

Will form one lead in and one lead out at the same time on most radial type components. The added shear cutter saves component prep time. Cutting capacity is .025" (.63mm) dia. soft wire. Featuring a molded ergonomic grip with dual leaf springs.

500-13A-US — 5" (125mm)

.375" (9.38mm) flat pack forming plier/cutter will form a "Gull Wing" and cut multiple leads to length on various types of flat packs. Cutting capacity is .010" (.25mm) soft wire. Featuring molded ergonomic grips with dual leaf springs.

900-10 — 5.5" (137mm)

Will cut and form 3 or 5 leads on a TO-220 style component. Leads will be formed to the bottom of component body for surface mounting. Featuring soft cushioned ergonomic grips with dual leaf springs.

500-13B-US — 5.5" (137mm)

.250" (6.25mm) flat pack forming plier/cutter will form a "Gull Wing" and cut multiple leads to length on various types of QFP and SOIC packages. Cutting capacity is .010" (.25mm) soft wire. Featuring molded ergonomic grips with dual leaf springs.

500-103-US — 5.5" (137mm)

Designed to form TO-220 style transistors with 3 or 5 leads. Component leads are formed .200" (5mm) from the body of the component. Featuring molded ergonomic grips with dual leaf springs.

907-89B — 5.75" (155mm)

Dog leg lead forming plier is a heavy duty plier designed to increase or decrease the center dimension on radial lead components. Featuring soft cushioned ergonomic grips with dual leaf springs.

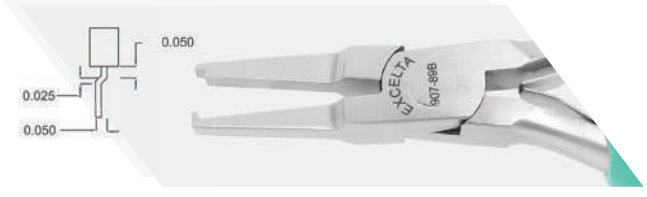

500 Series **Molded Grip** - Surface Resistivity - 10^8 ohms/sq
900 Series **Cushion Grip** - Surface Resistivity - 10^{10} ohms/sq

ESD SAFE

500-92-US — 5.5” (137mm)

TO-92 lead forming plier has slots on the outside jaw to help the plier fit between the leads of a TO-92 and flare them out .050” (1.25mm) forming a “Standoff” in the lead wires. Featuring molded ergonomic grips with dual leaf springs.

554B-US — 5.5” (137mm)

Stress relief forming plier is designed to form a consistent relief of a variety of components. It’s recommended for .020” (.5mm) or smaller wire. Featuring molded ergonomic grips with dual leaf springs.

500-11-US — 5.5” (137mm)

Off-set lead forming plier is used to form a single lead on TO-220 style transistor. The lead can be formed .100” (2.5mm). Featuring a molded ergonomic grip with dual leaf springs.

554F-US — 5.5” (137mm)

Stress relief forming plier is our smallest forming plier used to form a standoff on component leads of .020” (.5mm) dia. or smaller. Featuring molded ergonomic grips with dual leaf springs.

554A-US — 5” (125mm)

Stress relief forming plier is designed to form stress relief for transistor and resistor leads. The tool design will make consistent standoff on a variety of components. Recommended for .025” (.63mm) and smaller wire. Featuring molded ergonomic grips with dual leaf springs.

954A — 6” (150mm)

Stress relief forming plier is designed to form a consistent stress relief on a variety of components. Similar to the 554A-US, made on a larger frame, these pliers can form leads and wires up to .030” (.75mm) dia. Featuring soft cushioned ergonomic grips with dual leaf springs.

500 Series **Molded Grip** - Surface Resistivity - 10^8 ohms/sq
900 Series **Cushion Grip** - Surface Resistivity - 10^{10} ohms/sq

ESD SAFE

954B — 5.75" (155mm)

Designed to form a consistent standoff in a variety of components. Similar to the 554A-US, made on a larger frame these pliers can form leads and wires up to .035" (.88mm) diameter. Featuring cushioned ergonomic grips with dual leaf springs.

554-TX-US — 5.5" (137mm)

Stress relief forming plier will form stress relief in most radial lead components. Designed to form one lead in and one lead out in a single operation. It's recommended for .025" (.63mm) dia. or smaller wire. Featuring molded ergonomic grips with dual leaf springs.

909-4 — 5" (125mm)

Stress relief forming plier provides stress relief forming for transistor and resistor leads. Tool design is versatile in a variety of applications. Recommended for .035" (.88mm) wire or smaller. Featuring soft cushioned ergonomic grips with dual leaf springs.

554-TXB-US — 5" (125mm)

Stress relief forming plier will form stress relief in most radial lead components. Designed to form one lead in and one lead out in a single operation. Recommended for .025" (.63mm) dia. or smaller leads and wires. Featuring a molded ergonomic grip with dual leaf springs.

909-4B — 6.25" (156mm)

Stress relief forming plier may be used for many types of components. The smaller dimensions keep components close to the PC board. Recommended for .030" (.75mm) or smaller leads and wires. Featuring soft cushioned ergonomic grips with dual leaf springs.

554-3RB-US — 5.25" (131mm)

Lock-in lead forming plier will form an "s" bend on a component lead, enabling the component to stay in place when soldering. Recommended for .025" (.63mm) dia. or smaller leads and wires. Featuring molded ergonomic grips with dual leaf springs.

500 Series **Molded Grip** - Surface Resistivity - 10^8 ohms/sq
900 Series **Cushion Grip** - Surface Resistivity - 10^{10} ohms/sq

ESD SAFE

907-210A **6.75" (169mm)**

90° forming tool that is adjustable and designed for TO-247 size components.

500-210C-US **5.5" (137mm)**

90° lead forming tool with the bend length specified as required. Example of how to order: 500-210C-US-.050"

907-104A **5.5" (137mm)**

90° forming tool designed for TO-247 package lead forming. Leads #1 and #3 will be formed at .150" (3.75mm) from the body. Lead #2 will be formed at .300".

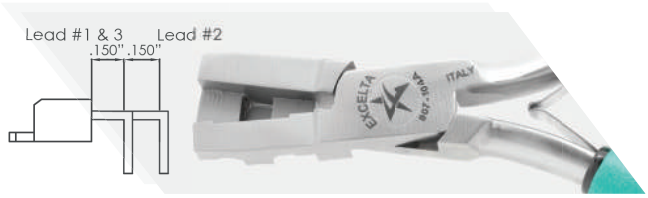

500-15-US **5.5" (137mm)**

TO-220 stagger lead forming vertical mount. Leads #1 and #3 will be formed with a .075" offset, and lead #2 with a .075" (1.88mm) offset in the opposite direction for .150" (3.75mm) lead centers.

500 Series **Molded Grip** - Surface Resistivity - 10^8 ohms/sq

ESD SAFE

500-104-US — 5" (125mm)

Transistor forming plier is used in forming 3 leads on a TO-220 style transistor. The two outside leads will be bent .200" (5mm), while the center lead is bent .300" (7.5mm) from the body of the component. Featuring molded ergonomic grips with dual leaf springs.

500-210-US — 5.5" (137mm)

Multiple lead forming plier is designed to bend the leads on LEDs and other multiple lead components. Leads are formed to 90° and .100" from the component body without damage. Recommended for use on .025" diameter leads and wires. Featuring molded ergonomic handles with dual leaf springs.

500-95B-US — 5.5" (137mm)

Dog leg lead forming plier is designed to form a "Dog Leg" bend in the lead wire. This tool can be used to increase or decrease the center dimensions of the radial lead components. Recommended for .030" (.75mm) or smaller leads and wires. Featuring molded ergonomic grips with dual leaf springs.

500-210A-US — 4.75" (119mm)

Adjustable multiple lead forming plier is designed to form transistor leads with .100" (2.5mm) center spacing. Leads are formed at 90° for through-hole mounting. The distance from the component body to the end is adjustable from .100" (2.5mm) to .300" (7.5mm). Featuring molded ergonomic grips with dual leaf springs.

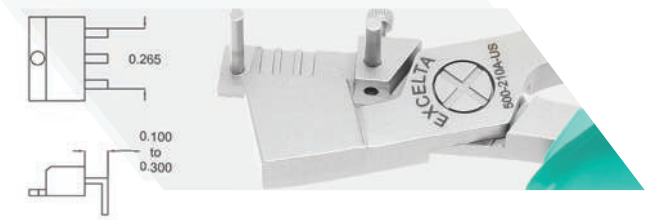

500-104B-US — 5" (125mm)

Transistor forming plier is an elaborate design for forming 5 leads on a TO-220 component in one easy operation. The tool will ensure uniformity of difficult lead alignment. Featuring molded ergonomic grips with dual leaf springs.

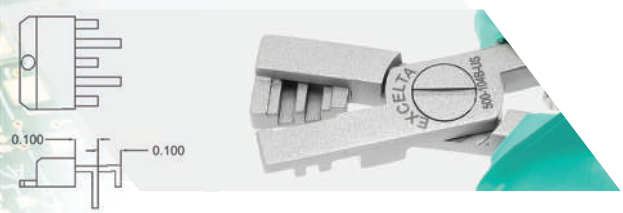

500 Series Molded Grip - Surface Resistivity - 10^8 ohms/sq

ESD SAFE

505-US 5.5" (137mm)

Our 505 Series pliers have been designed to handle DIP/IC packages. The chart will help you quickly find the size you are looking for.

Part#	A	B	C	Pins
505-US	.18" (4.5mm)	.4" (10mm)	1.062" (26.55mm)	18-22
505A-US	.18" (4.5mm)	.6" (15mm)	1.260" (31.5mm)	24
505B-US	.18" (4.5mm)	.6" (15mm)	2.080" (52mm)	40
505BG-US	.18" (4.5mm)	.6" (15mm)	1.398" (35mm)	28
505C-US	.18" (4.5mm)	.3" (7.5mm)	.7880" (19.7mm)	14-16
505D-US	.18" (4.5mm)	.3" (7.5mm)	.3580" (.95mm)	6-8
505E-US	.18" (4.5mm)	.3" (7.5mm)	1.260" (31.5mm)	24
505F-US	.18" (4.5mm)	.3" (7.5mm)	.2570" (6.43mm)	4
505G-US	.18" (4.5mm)	.3" (7.5mm)	1.660" (41.5mm)	32
505J-US	.18" (4.5mm)	.3" (7.5mm)	.9660" (24.15mm)	20
505K-US	.18" (4.5mm)	.3" (7.5mm)	1.398" (35mm)	28
505H-US	.18" (4.5mm)	.6" (15mm)	3.30" (82.5mm)	48
505-20-US-ST	.18" (4.5mm)	.4" (10mm)	1.06" (26.5mm)	18-22

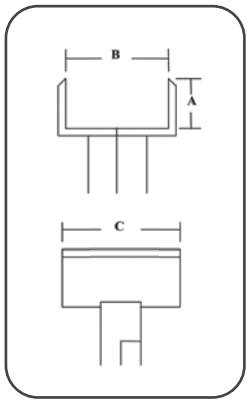

Custom size pliers available upon request.

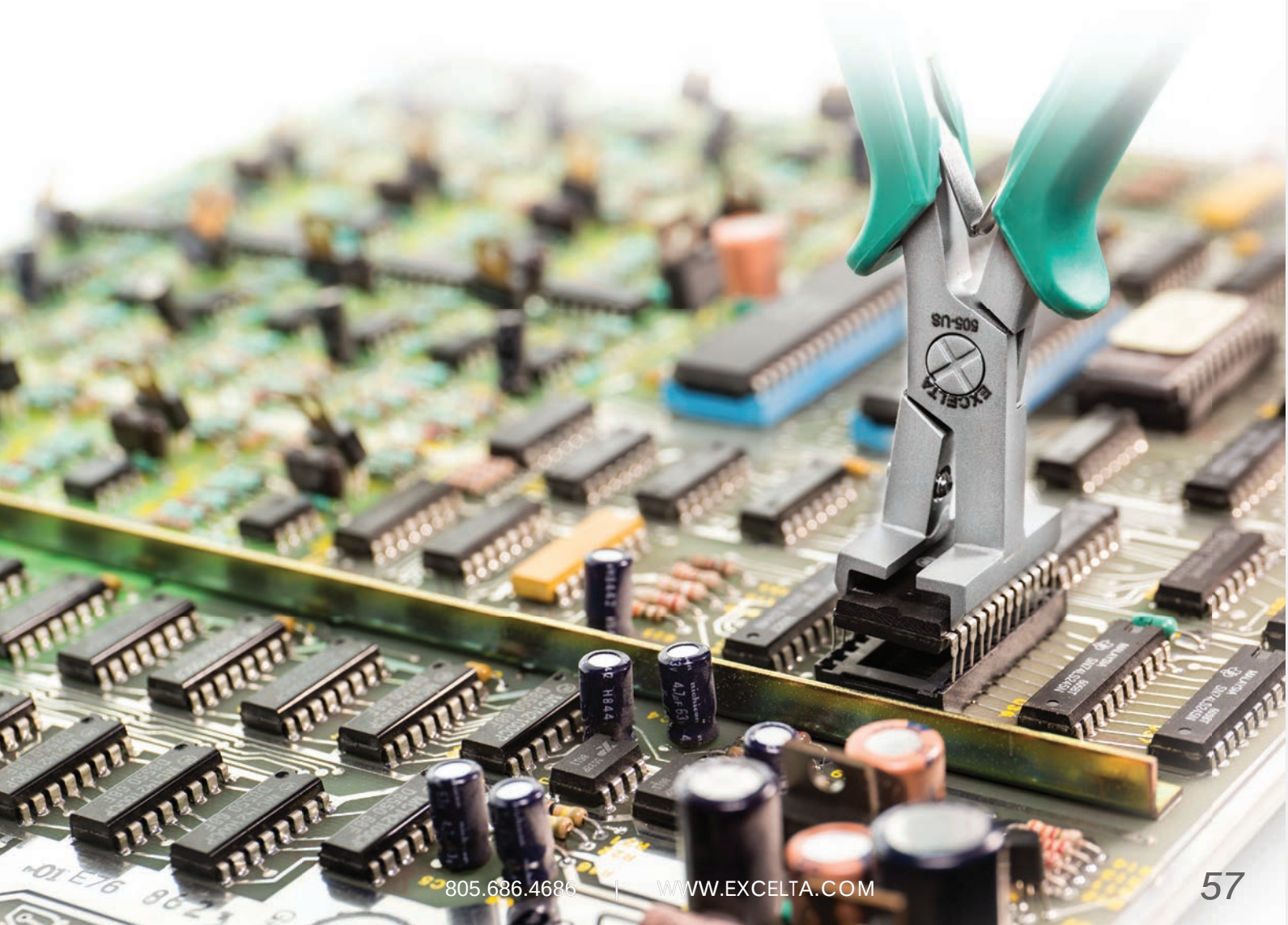

5 Levels of Precision

★★★★★

ULTRA PRECISION

Made in Switzerland from 40% cobalt alloy steel, harder than stainless steel, anti-magnetic, excellent resistance to corrosion and resistant to temperature up to 500°C (932°F). Used with very high magnification.

★★★★

EXTREME PRECISION

Made of Titanium Alloy, Super Neverust (AISI 904L), Diamond Coated tips (AISI 316L) and Ceramic Coated tips (AISI 440). These three materials are stronger than the standard AISI 303/304 stainless steel, extending the life of the tips. In addition, solder will not stick to the titanium alloy and it is very light weight and temperature resistant.

★★★

HIGH PRECISION

Precision grade tweezers made from neverust® anti-magnetic stainless steel, stainless steel, or carbon steel and are manufactured in Switzerland with high precision points. The perfect choice when working under 5X to 10X magnification.

★★

FINE PRECISION

Standard grade "PI" tweezers have fine precision points at a lower cost. Used with low Magnification.

★

GENERAL PRECISION

General Precision Grade "SE" tweezers are manufactured for general purpose work when magnification is not required.

TWEEZER TECHNICAL INFORMATION

The most critical parts of any tweezer or forcep are the points. Finishing the points is an art form perfected over years of practice. Whether working on microchips or working on human cells, microscopy is playing a significant part in the work being done today. This work requires extremely precise tweezer points that meet perfectly. Excelta tweezers cover the spectrum!

Micro Fine Tips

When working under high magnification with tweezers/forceps it is critical that the points are exactly the same size and meet precisely. Many of these tweezers have relieved tips allowing for excellent visibility under a scope.

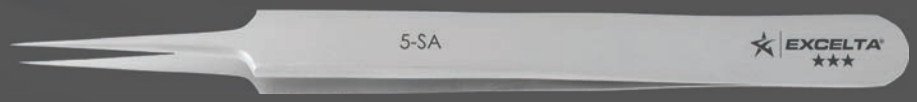

Fine Tips

These very fine tipped tweezers can be used for low magnification applications, or for work being done without the use of a scope.

Medium Tips

General purpose tweezers with semi-fine tips are used for any work done without a microscope.

Blunt Strong Tips

Blunt strong tipped tweezers are the work horse of tweezers. Most of these tweezers can be dropped without much damage to the tips. They last much longer than fine or micro fine tipped tweezers, but lack the accuracy of finer tipped tweezers.

Flat Tips

Flat tip tweezers are used for everything from placing and removing labels, to picking up flat items like lenses. These tips are generally rounded.

Application Specific Tips

We create application specific tweezers for ANY application. Over the years certain applications have repeated, prompting us to categorize these application specific tweezers. Those categories include cutting tweezers, paddle tip tweezers, wafer tweezers, miniature tweezers, cross-action tweezers, ergonomic tweezers and component handling tweezers.

Tweezer Add-ons

We offer a wide variety of customizations that can be added on to most items found in this tweezer section. The add-on code simply needs to be added to the part number (example 3C-SA-MP). If you have questions or would like more information about add-ons do not hesitate to call.

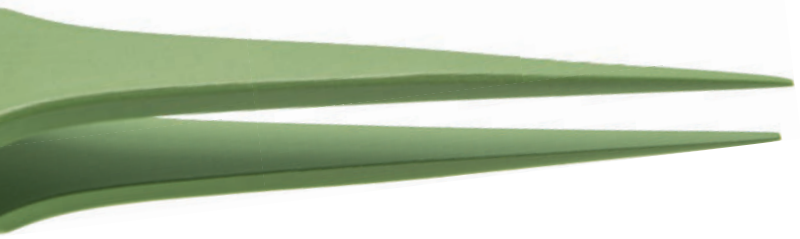

TC

PTFE Coating is applied 1 ½ " up the tip and helps prevent marring and scratching (metal to metal) contact. Can be applied in 1.5 mil, 3.0 mil, and 5.0 mil thickness.

Example - **3C-SA-TC15**

FLTC

Full length PTFE Coating is applied to the entire tweezer and helps prevent marring and scratching (metal to metal) contact. Can be applied in 1.5 mil, 3.0 mil, and 5.0 mil thickness.

Example - **3C-SA-FLTC50**

ET

Ergonomic Foam Cushion Padding for tweezers. The soft cushion grip helps to relieve the "PINCH GRIP" when using tweezers for long periods of time. The surface resistivity is 10^{10} ohms/sq.

Example - **3C-SA-ET**

MP

Mirror Polished tweezers have radiused edges and polished inside points to prevent nicking and scratching when handling delicate parts.

Example - **3C-SA-MP**

Tweezer Add-ons

D

Single Cut Serrations can be added to the inside points of most tweezers. Serrations help hold parts when handling and manipulating.

Example - **3C-SA-D**

DX

Double Cut Serrations can be added to the inside points of most tweezers. These serrations are finer and should be used when handling small parts and wires.

Example **3C-SA-DX**

MZ

MZ tweezers feature radiused inside edges and blunted tips.

Example **3C-SA-MZ**

WO

Wide Opening tweezers are designed to have the tips parallel .5”(12.5mm) apart at rest.

Example **3C-SA-WO**

WHY COBALTIMA®?

COBALTIMA® - The perfect combination of strength and durability. Superior to the best stainless steel, these tweezers and forceps have points insensitive to fatigue and they maintain elasticity. The hardness of the points is progressive, reaching its peak in the deployment zone where we have measured a Rockwell C hardness of 63/64 for model 5-CO.

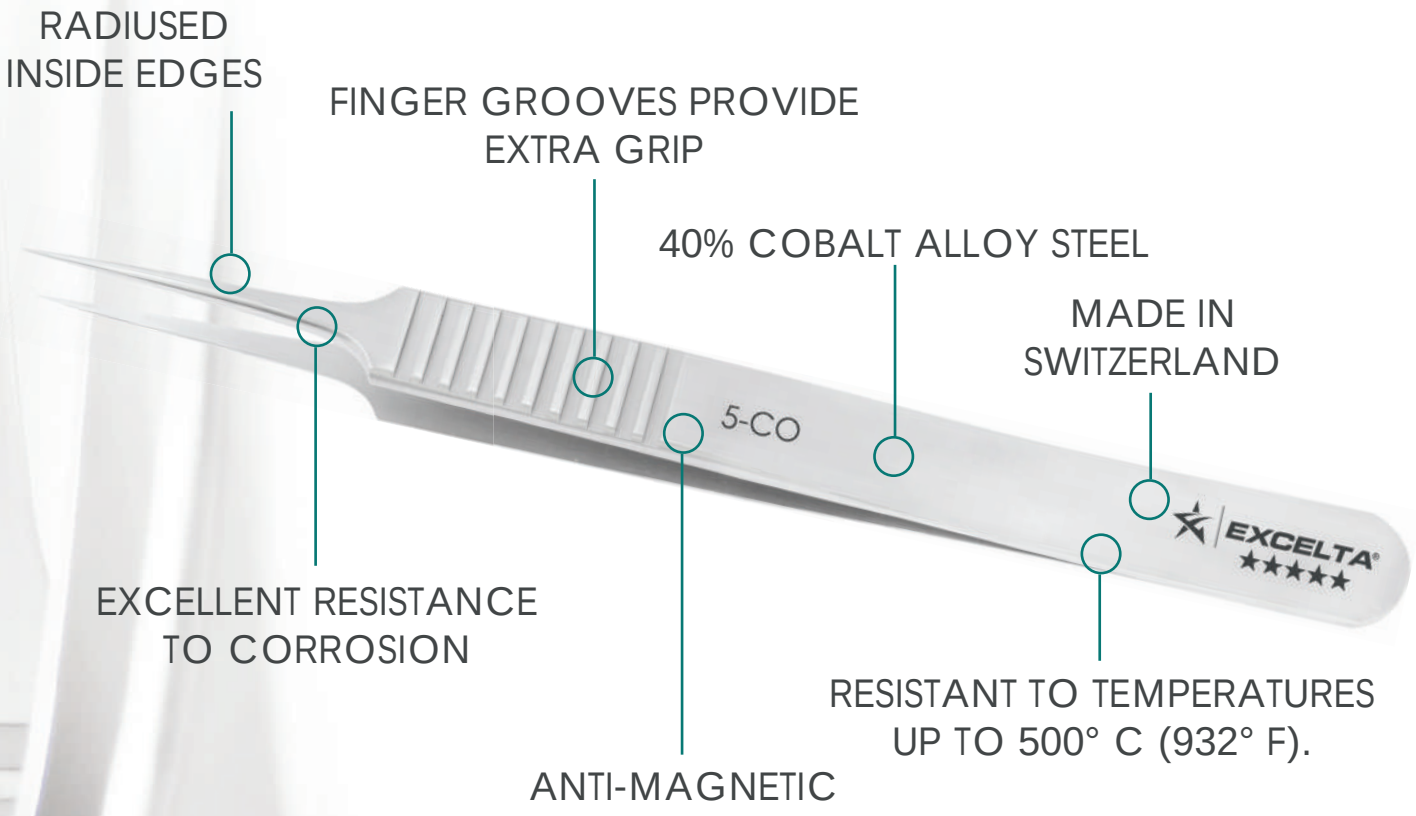

Temperature of Fusion	(°C)		450–1460
Volunteer Mass	(g.cm³)		8.3
Electrical Resistivity at 20°	(Ω Cm)		90-95
Thermo Co-efficient Between 0 and 3000°C	softened	(°C)	4.10^{4}
	crushed	(°C)	$20,8.10^{-3}$
Magnetic Properties	anti-magnetic		

Our special Cobalt steel is harder than stainless steel and has excellent resistance to corrosion and temperatures of up to 500°C (932°F).

TAPERED TIPS WITH MICRO FINE POINTS — Length 4.25" (106mm)

This design has our finest points and is the ultimate tool for microscopy.

Part#	Material	Critical Tip Measurement (CTM)
5-CO	Cobalt	.002"X .0004" .05mm X .01mm

TAPERED TIPS WITH MICRO FINE POINTS — Length 4.25" (106mm)

This design has micro fine points and is the ideal tool for microscopy.

Part#	Material	Critical Tip Measurement (CTM)
4-CO	Cobalt	.0024"X .0008" .06mm X .02mm

TAPERED TIPS WITH STRONG FINE POINTS — Length 4.75" (119mm)

Used for microscopy, this tool has stronger points than the 5-CO or 4-CO.

Part#	Material	Critical Tip Measurement (CTM)
2-CO	Cobalt	.009"X .0039" .24mm X .1mm

STRAIGHT TIPS WITH VERY FINE POINTS — Length 4.75" (119mm)

Very popular design for handling and placing of small parts.

Part#	Material	Critical Tip Measurement (CTM)
3-CO	Cobalt	.0031"X .0016" .08mm X .04mm

COBALTIMA | MADE IN SWITZERLAND

TWEEZERS / FORCEPS | ★★★★★ ULTRA PRECISION

The radiused inside edges protect parts from scratching, while the outside finger grooves provide extra grip and feel when handling very small parts.

STRAIGHT TIPS WITH VERY FINE POINTS — Length 4.25" (106mm)

Our most popular design for all types of micro assembly.

Part#	Material	Critical Tip Measurement (CTM)
3C-CO	Cobalt	.0031"X .0016" .08mm X .04mm

10° OFFSET TIPS WITH MICRO FINE POINTS — Length 4.5" (112mm)

The offset design offers better visibility in dense areas.

Part#	Material	Critical Tip Measurement (CTM)
5A-CO	Cobalt	.0024"X .0008" .06mm X .02mm

45° BENT TIPS WITH MICRO FINE POINTS — Length 4.5" (112mm)

The bent tips are helpful when reaching into confined areas.

Part#	Material	Critical Tip Measurement (CTM)
51-CO	Cobalt	.0020"X .0004" .05mm X .01mm

45° CURVED TIPS WITH VERY FINE POINTS — Length 4.5" (112mm)

Very popular design for handling and placing of small parts.

Part#	Material		Critical Tip Measurement (CTM)
7-CO	Cobalt		.0027"X .0012" .07mm X .03mm
7B-CO	Cobalt	Serrated Tips	.0027"X .0012" .07mm X .03mm

COBALTIMA MINIATURE
TWEEZERS / FORCEPS

These miniature tweezers are designed for work under a microscope and engineered to fit small hands. The radiused inside edges protect parts from scratching.

TAPERED TIPS WITH MICRO FINE POINTS — Length 3.13" (78mm)

Part#	Material		Critical Tip Measurement (CTM)
M-5-CO	Cobalt		.0020"X .0004" .05mm X .01mm
M-5-CO-ET	Cobalt	Ergo-Tweeze®	.0020"X .0004" .05mm X .01mm

STRAIGHT TIPS WITH FINE POINTS — Length 3.13" (78mm)

Part#	Material		Critical Tip Measurement (CTM)
M-3-CO	Cobalt		.0037"X .0016" .08mm X .04mm
M-3-CO-ET	Cobalt	Ergo-Tweeze®	.0037"X .0016" .08mm X .04mm

75° ANGLED TIPS WITH SHARP POINTS — Length 3.13" (78mm)

Part#	Material	Critical Tip Measurement (CTM)
M-6-CO	Cobalt	.0027"X .0012" .07mm X .03mm

EXOTIC METALS/COATINGS
TWEEZERS

Several of our most popular style tweezers are now offered in alternative materials that add value compared to the standard tweezer metals.

SUPER NEVERUST® — Stronger than our 'SA' material

Hard

pg. 67

Non-Magnetic
Will not Oxidize
Resists most acids

DIAMOND TIPPED — Neverust® material

Harder

pg. 68

Stronger than Super Neverust®
Anti-Magnetic
Will not Oxidize
Resists most acids

CERAMIC COATED — Stainless Steel

Harder

pg. 69

Stronger than Diamond Tipped (Cerakote™ C0105)
Stainless Steel – Magnetic (AISI 440)
Temperature resistant to 1600°F
Resists most acids

TITANIUM — Light Weight

Hardest

pg. 70

Soldering Applications - Solder will not adhere to tweezers
Temperature Resistant to 430°C (806°F)
Stronger than Super Neverust® or Diamond Tipped
Non-Magnetic
Will not Oxidize
Resists most acids

PTFE Coated — Non-Stick Material

Soft

pg. 71

Sensitive Applications - Non-Stick material helpful when handling delicate materials
PTFE Coating applied on the first 1.5"(37.5mm) of the tips.
Prevents marring and scratching (metal to metal) contact.

SUPER NEVERUST®

EXOTIC METALS/COATINGS

Super Neverust® (AISI 904L) is non-magnetic and stronger than the standard 'SA' material. It will not oxidize and it resists most acids.

TAPERED TIPS WITH EXTRA FINE POINTS — Length 4.38" (109mm)

Part#	Material	Critical Tip Measurement (CTM)	
5-SN	Super Neverust®	.003"X .003"	.08mm X .08mm

STRAIGHT TIPS WITH FINE POINTS

Part#	Material	Length	Critical Tip Measurement (CTM)	
3-SN	Super Neverust®	4.75" (118mm)	.003"X .005"	.08mm X .12mm
3C-SN	Super Neverust®	4.38" (109mm)	.003"X .005"	.08mm X .12mm

45° CURVED TIPS WITH VERY FINE POINTS — Length 4.5" (113mm)

Part#	Material	Critical Tip Measurement (CTM)	
7-SN	Super Neverust®	.008" X .005"	.2mm X .12mm

TAPERED TIPS WITH FLAT ROUND POINTS — Length 4.75" (118mm)

Part#	Material	Critical Tip Measurement (CTM)	
2A-SN	Super Neverust®	.06" X .010"	1.5mm X .25mm

DIAMOND COATED
EXOTIC METALS/COATINGS

EXTREME PRECISION ★★★★

Diamond Coating the tips strengthens the tips for added life over the conventional SA' material. These tweezers are anti-magnetic, anti-acid and stainless (AISI 316L).

TAPERED TIPS WITH MICRO FINE POINTS — Length 4.38" (109mm)

Part#	Material	Critical Tip Measurement (CTM)	
5-SA-DC	Neverust®	.004 X .002"	.1mm X .05mm

STRAIGHT TIPS WITH FINE POINTS — Length 4.38" (109mm)

Part#	Material	Critical Tip Measurement (CTM)	
3C-SA-DC	Neverust®	.008"X .003"	.2mm X .08mm

LONG STRAIGHT WITH FINE POINTS — Length 5.5" (137mm)

Part#	Material	Critical Tip Measurement (CTM)	
SS-SA-DC	Neverust®	.006"X .003"	.15mm X .08mm

45° CURVED TIPS WITH VERY FINE POINTS — Length 4.5" (113mm)

Part#	Material	Critical Tip Measurement (CTM)	
7-SA-DC	Neverust®	.005"X .004"	.13mm X .1mm

TAPERED TIPS WITH FLAT ROUND POINTS — Length 4.75" (118mm)

Part#	Material	Critical Tip Measurement (CTM)	
2A-SA-DC	Neverust®	.07" X .005"	1.75mm X .12mm

STRAIGHT STRONG POINTS — Length 4.75" (118mm)

Part#	Material	Critical Tip Measurement (CTM)	
00-SA-DC	Neverust®	.030" X .005"	.75mm X .12mm

CERAMIC COATED

EXOTIC METALS/COATINGS

Ceramic Coating the tips strengthens the tips for added life over the diamond coated or conventional 'SA' material. These tweezers are magnetic (AISI 440), temperature resistant to 1600°F and resistant to most acids.

TAPERED TIPS WITH MICRO FINE POINTS — Length 4.38" (109mm)

Part#	Material	Quality	Critical Tip Measurement (CTM)	
5-S-CC	Stainless Steel	★★★★	.004"X.002"	.1mm X .05mm

NEW ITEM

STRAIGHT TIPS WITH FINE POINTS — Length 4.38" (109mm)

Part#	Material	Quality	Critical Tip Measurement (CTM)	
3C-S-CC	Stainless Steel	★★★★	.008"X.003"	.2mm X .08mm

NEW ITEM

45° CURVED TIPS WITH VERY FINE POINTS — Length 4.5" (113mm)

Part#	Material	Quality	Critical Tip Measurement (CTM)	
7-S-CC	Stainless Steel	★★★	.005"X.004"	.13mm X .1mm

NEW ITEM

TAPERED TIPS WITH FLAT ROUND POINTS — Length 4.75" (118mm)

Part#	Material	Quality	Critical Tip Measurement (CTM)	
2A-S-CC	Stainless Steel	★★★★	.07"X.005"	1.75mm X .12mm

NEW ITEM

STRAIGHT STRONG POINTS — Length 4.75" (118mm)

Part#	Material	Quality	Critical Tip Measurement (CTM)	
00-S-CC	Stainless Steel	★★★★	.030"X.005"	.75mm X .12mm

NEW ITEM

TITANIUM TWEEZERS

EXTREME PRECISION ★★★★

The Titanium alloy is very light, stronger than most metal tweezers, will not oxidize, resists most acids and is non-magnetic. Additionally, solder will not adhere to it, making it ideal for soldering applications. It is temperature resistant to 430°C (806°F).

TAPERED TIPS WITH EXTRA FINE POINTS — Length 4.38" (109mm)

Part#	Material	Critical Tip Measurement (CTM)
5-TA	Titanium	.003"X .0075" .150mm X .0625mm

STRAIGHT TIPS WITH FINE POINTS — Length 4.38" (109mm)

Part#	Material	Critical Tip Measurement (CTM)
3C-TA	Titanium	.005" X .0031" .13mm X .08mm

45° CURVED TIPS WITH VERY FINE POINTS — Length 4.5" (113mm)

Part#	Material	Critical Tip Measurement (CTM)
7-TA	Titanium	.095" X .003" 2.375mm X .075mm

TAPERED TIPS WITH FLAT ROUND POINTS — Length 4.75" (118mm)

Part#	Material	Critical Tip Measurement (CTM)
2A-TA	Titanium	.059" X .008" 1.5mm X .2mm

PTFE - NON MARRING

EXOTIC METALS/COATINGS

PTFE Coating applied on the first 1.5"(37.5mm) of the tips helps prevent marring and scratching (metal to metal) contact. This coating can be applied on any tweezer in 1.5 mil, 3.0 mil and 5.0 mil thickness. See pg. 60 for more details.

TAPERED TIPS WITH EXTRA FINE POINTS — Length 4.38" (109mm)

Part#	Material	Quality	Critical Tip Measurement (CTM)
5-SA-SE-TC15	Stainless Steel	★	

NEW ITEM

45° CURVED TIPS WITH VERY FINE POINTS — Length 4.5" (113mm)

Part#	Material	Quality	Critical Tip Measurement (CTM)
7-SA-SE-TC15	Stainless Steel	★	

NEW ITEM

STRAIGHT STRONG POINTS — Length 4.75" (118mm)

Part#	Material	Quality	Critical Tip Measurement (CTM)
00-SA-SE-TC15	Stainless Steel	★	

NEW ITEM

TAPERED TIPS WITH FLAT ROUND POINTS — Length 4.75" (118mm)

Part#	Material	Quality	Critical Tip Measurement (CTM)	
2A-SA-TC15	Stainless Steel	★★★	.11" X .066"	3mm X 1.7mm
2A-SA-TC30	Stainless Steel	★★★	.11" X .066"	3mm X 1.7mm
2A-SA-PI-TC15	Stainless Steel	★★		
2A-SA-SE-TC15	Stainless Steel	★		

NEW ITEM

STANDARD
STYLE TWEEZERS

STANDARD TWEEZERS

The following pages feature standard style tweezers. Most styles are available in three quality levels and materials. The stars are used to designate the quality level.

★★★ Three Star High Precision Grade

Three Star High Precision Grade tweezers are manufactured in Switzerland with high precision points. They are the perfect choice when working under 5X to 10x magnification.

★★ Two Star "PI" Fine Precision Grade

Two Star Fine Precision Grade "PI" tweezers are manufactured with fine precision points at a lower cost.

★ One Star "SE" General Precision Grade

One Star General Precision Grade "SE" tweezers are manufactured for general purpose use when magnification is not required

Materials

Stainless Steel, Anti-Magnetic - Code "**SA**" have superior anti-magnetic, anti-acid and anti-corrosion properties. Three Star tweezers feature NEVERUST® stainless steel.

Stainless Steel - Code "**S**" have a higher carbon content and harder tips than the "SA" material. This material will rust under extreme exposure and is highly magnetic.

Carbon Steel - **No Code** - The tips are flame hardened for long life and are highly magnetic with low rust resistance.

STRAIGHT TAPERED TWEEZERS

The tapered tips on these tweezers afford the operator enhanced visibility when working under a microscope. The '5' style has the smallest points making it ideal for working under high magnification. The '2' style offers much stronger points than the '5' or '4' style.

TAPERED TIPS - VERY FINE POINTS

Length 4.25" (106mm)

Part#	Material	Quality	Critical Tip Measurement (CTM)	
5	Carbon Steel	★★★	.004" X .002"	.1mm X .05mm
5-S	Stainless Steel	★★★	.004" X .002"	.1mm X .05mm
5-SA	Anti-Mag. Neverust®	★★★	.004" X .002"	.1mm X .05mm
5-SA-EC*	Anti-Mag. Neverust®	★★★	.004" X .002"	.1mm X .05mm
5-S-PI	Stainless Steel	★★		
5-SA-PI	Anti-Mag. SS	★★		
5-S-SE	Stainless Steel	★		
5-SA-SE	Anti-Mag. SS	★		

5-SA-EC* - Epoxy Coated

TAPERED TIPS - VERY FINE POINTS

Length 4.25" (106mm)

Part#	Material	Quality	Critical Tip Measurement (CTM)	
4-SA	Anti-Mag. Neverust®	★★★	.005" X .003"	.13mm X .08mm
4-SA-PI	Anti-Mag. SS	★★		
4-SA-SE	Anti-Mag. SS	★		

TAPERED TIPS - STRONG FINE POINTS

Length 4.75" (119mm)

Part#	Material	Quality	Critical Tip Measurement (CTM)	
2-S	Stainless Steel	★★★	.013" X .006"	.33mm x .14mm
2-SA	Anti-Mag. Neverust®	★★★	.013" X .006"	.33mm x .14mm
2-SA-PI	Anti-Mag. SS	★★		
2-S-SE	Stainless Steel	★		
2-SA-SE	Anti-Mag. SS	★		

STRAIGHT VERY FINE POINT TWEEZERS

HIGH PRECISION ★★★
FINE ★★
GENERAL ★

These tweezers are ideal for use under magnification. The fine points and slender body are perfect for handling very small items. Style numbers 3 and 3C are our most common, fine pointed tweezers.

VERY FINE POINTS — Length 4.5" (113mm)

Part#	Material	Quality	Critical Tip Measurement (CTM)	
1-S	Stainless Steel	★★★	.008" X .005"	.20mm X .12mm
1-SA	Anti-Mag. Neverust®	★★★	.008" X .005"	.20mm X .12mm
P-S	Stainless Steel	★★★	.009" X .006"	.24mm X .14mm
1-PI	Carbon Steel	★★		
1-SA-PI	Anti-Mag. SS	★★		
1-S-SE	Stainless Steel	★		
1-SA-SE	Anti-Mag. SS	★		

VERY FINE POINTS — Length 4.75" (119mm)

Part#	Material	Quality	Critical Tip Measurement (CTM)	
3-S	Stainless Steel	★★★	.007" X .004"	.17mm X .1mm
3-SA	Anti-Mag. Neverust®	★★★	.007" X .004"	.17mm X .1mm
3-S-PI	Stainless Steel	★★		
3-SA-PI	Anti-Mag. SS	★★		
3-S-SE	Stainless Steel	★		
3-SA-SE	Anti-Mag. SS	★		

VERY FINE POINTS — Length 4.25" (106mm)

Part#	Material	Quality	Critical Tip Measurement (CTM)	
3C	Carbon Steel	★★★	.007" X .004"	.17mm X .1mm
3C-S	Stainless Steel	★★★	.007" X .004"	.17mm X .1mm
3C-SA	Anti-Mag. Neverust®	★★★	.007" X .004"	.17mm X .1mm
3C-SA-EC*	Anti-Mag. Neverust®	★★★	.007" X .004"	.17mm X .1mm
3C-PI	Carbon Steel	★★		
3C-S-PI	Stainless Steel	★★		
3C-SA-PI	Anti-Mag. SS	★★		
3C-SE	Carbon Steel	★		
3C-S-SE	Stainless Steel	★		
3C-SA-SE	Anti-Mag. SS	★		

3C-SA-EC* - Epoxy Coated

VERY FINE POINTS - ANTI-CRUSH FEATURE — Length 4.25" (106mm)

Part#	Material	Quality	Critical Tip Measurement (CTM)	
53C-SA	Anti-Mag. Neverust®	★★★	.007" X .004"	.17mm X .1mm

STRAIGHT VERY FINE POINT TWEEZERS

These tweezers are ideal for use under magnification. The fine points and slender body are perfect for handling very small items. Style numbers SS and 60 are very long and slender making them ideal for handling items beyond the reach of a standard tweezer.

LONG VERY FINE POINTS

Length 5.5" (138mm)

Part#	Material	Quality	Critical Tip Measurement (CTM)
SS-S	Stainless Steel	★★★	.008" X .005" .2mm X .12mm
SS-SA	Anti-Mag. Neverust®	★★★	.008" X .005" .2mm X .12mm
SS-SA-PI	Anti-Mag. SS	★★	
SS-S-SE	Stainless Steel	★	
SS-SA-SE	Anti-Mag. SS	★	

LONG VERY FINE POINTS

Length 5.5" (138mm)

Part#	Material	Quality	Critical Tip Measurement (CTM)
60-SA	Anti-Mag. Neverust®	★★★	.008" X .008" .2mm X .2mm

VERY FINE POINTS - SERRATED HANDLES

Length 4.75" (119mm)

Part#	Material	Quality	Critical Tip Measurement (CTM)
64-SA	Anti-Mag. Neverust®	★★★	.006" X .004" .15mm X .1mm

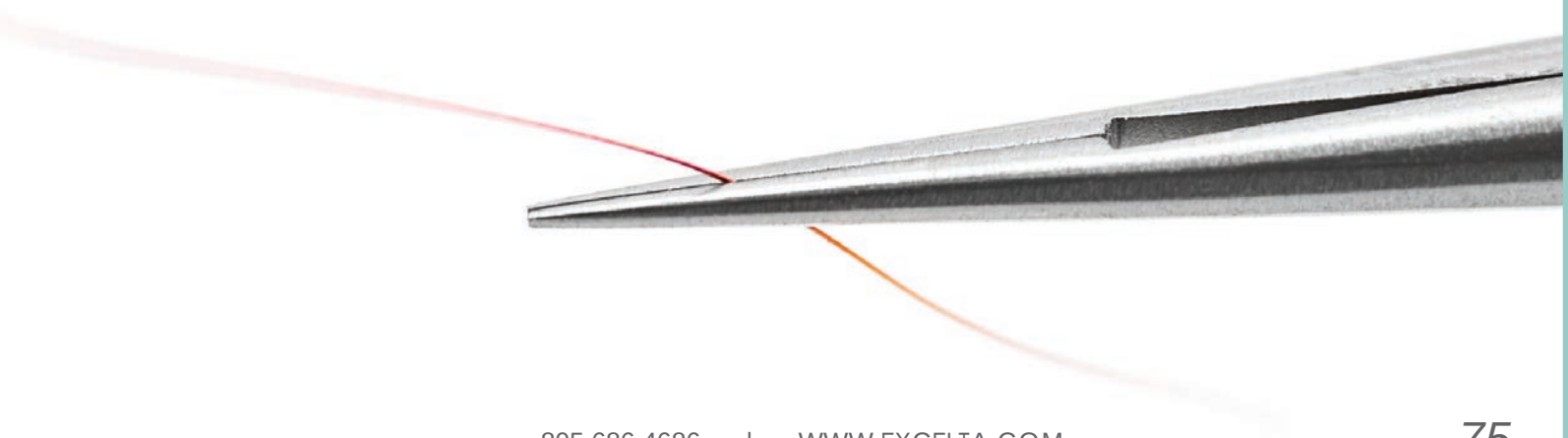

ANGLED VERY FINE POINT TWEEZERS

HIGH PRECISION ★★★
FINE ★★
GENERAL ★

These very fine pointed tweezers are offset or bent, to provide ideal visibility when working under high magnification. The '5A' and '5B' styles are also relieved at the tip for additional visibility. All of these tools offer very fine small points to handle the smallest of items.

TAPERED 10° OFFSET VERY FINE POINTS

Length 4.5" (113mm)

Part#	Material	Quality	Critical Tip Measurement (CTM)	
5A-S	Stainless Steel	★★★	.005" X .003"	.13mm X .08mm
5A-SA	Anti-Mag. Neverust®	★★★	.005" X .003"	.13mm X .08mm
5A-SA-PI	Anti-Mag. SS	★★		
5A-S-SE	Stainless Steel	★		
5A-SA-SE	Anti-Mag. SS	★		

TAPERED 45° BENT TIPS - MICRO FINE POINTS

Length 4.25" (106mm)

Part#	Material	Quality	Critical Tip Measurement (CTM)	
5B-SA	Anti-Mag. Neverust®	★★★	.004" X .002"	.1mm X .05mm
5B-SA-PI	Anti-Mag. SS	★★		

TAPERED 45° BENT TIPS - VERY FINE POINTS

Length 4.25" (106mm)

Part#	Material	Quality	Critical Tip Measurement (CTM)	
3CB-S	Stainless Steel	★★★	.007" X .004"	.17mm X .1mm

ANGLED VERY FINE POINT TWEEZERS

These very fine pointed tweezers are offset or bent to provide ideal visibility when working under high magnification. The '5C', '51' and '50' styles are also relieved at the tip for additional visibility. These tools offer very fine, small points to handle the smallest of items. The '65A' style is long for extended reach.

TAPERED 45° CIRCUMVENTED OBLIQUE MICRO FINE POINTS

Length 4.5" (113mm)

Part#	Material	Quality	Critical Tip Measurement (CTM)	
5C-SA	Anti-Mag. Neverust®	★★★	.004" X .002"	.1mm X .05mm

TAPERED 45° OBLIQUE VERY FINE POINTS

Length 4.5" (113mm)

Part#	Material	Quality	Critical Tip Measurement (CTM)	
51-S	Stainless Steel	★★★	.004" X .002"	.1mm X .05mm
51-SA	Anti-Mag. Neverust®	★★★	.004" X .002"	.1mm X .05mm
51-SA-PI	Stainless Steel	★★		
50-SA-PI*	Anti-Mag. SS	★★		

50-SA-PI* (30° Oblique)

LONG 45° BENT VERY FINE POINTS

Length 5.5" (138mm)

Part#	Material	Quality	Critical Tip Measurement (CTM)	
65A-SA	Anti-Mag. Neverust®	★★★	.008" X .005"	.2mm X .12mm

CURVED VERY FINE POINT TWEEZERS

HIGH ★★★
FINE ★★
GENERAL ★
PRECISION

The '7' style is the most common curved tweezer and offers high visibility and very fine points. The '7B' style offers serrated points for better gripping power. The '6' style has 70° points for reaching into tight places while not restricting visibility.

45° CURVED VERY FINE POINTS

Length 4.5" (113mm)

Part#	Material	Quality	Critical Tip Measurement (CTM)	
7-S	Stainless Steel	★★★	.007" X .004"	.17mm X .1mm
7-SA	Anti-Mag. Neverust®	★★★	.007" X .004"	.17mm X .1mm
7-SA-EC*	Anti-Mag. Neverust®	★★★	.007" X .004"	.17mm X .1mm
7-PI	Carbon Steel	★★		
7-S-PI	Stainless Steel	★★		
7-SA-PI	Anti-Mag. SS	★★		
7-S-SE	Stainless Steel	★		
7-SA-SE	Anti-Mag. SS	★		

7-SA-EC* - Epoxy Coated

45° CURVED VERY FINE POINTS - SERRATED

Length 4.5" (113mm)

Part#	Material	Quality	Critical Tip Measurement (CTM)	
7B-S	Stainless Steel	★★★	.007" X .004"	.17mm X .1mm
7B-SA	Anti-Mag. Neverust®	★★★	.007" X .004"	.17mm X .1mm
7B-SA-PI	Anti-Mag. SS	★★		
7B-SA-SE	Anti-Mag. SS	★		

70° ANGLED FLAT SHARP POINTS

Length 4.5" (113mm)

Part#	Material	Quality	Critical Tip Measurement (CTM)	
6-S	Stainless Steel	★★★	.007" X .004"	.17mm X .1mm
6-SA	Anti-Mag. Neverust®	★★★	.007" X .004"	.17mm X .1mm
6-PI	Carbon Steel	★★		
6-SA-PI	Anti-Mag. SS	★★		
6-S-SE	Stainless Steel	★		
6-SA-SE	Anti-Mag. SS	★		

STRAIGHT MEDIUM POINT TWEEZERS

These 'Boley' style tweezers are general purpose tweezers which feature medium points, and are most commonly used for bench top work not requiring magnification. The 'GG' style is tapered and very strong.

MEDIUM POINT

Length 5" (125mm)

Part#	Material	Quality	Critical Tip Measurement (CTM)	
AA	Carbon/Nickel Plated	★★★	.008" X .008"	.2mm X .2mm
AA-S	Stainless Steel	★★★	.008" X .008"	.2mm X .2mm
AA-SA	Anti-Mag. Neverust®	★★★	.008" X .008"	.2mm X .2mm
AA-SA-PI	Anti-Mag. SS	★★		
AA-SE	Carbon Steel	★		
AA-S-SE	Stainless Steel	★		
AA-SA-SE	Anti-Mag. SS	★		

MEDIUM POINTS - VINYL COATED HANDLE

Length 5" (125mm)

Part#	Material	Quality
AA-SA-SE-PH	Anti-Mag. SS	★

MEDIUM POINTS

Length 4.75" (119mm)

Part#	Material	Quality	Critical Tip Measurement (CTM)	
MM	Carbon/Nickel Plated	★★★	.012" X .012"	.3mm X .3MM
MM-SA-PI	Anti-Mag. SS	★★		
MM-SE	Carbon Steel	★		
MM-SA-SE	Anti-Mag. SS	★		

TAPERED MEDIUM POINTS

Length 5" (125mm)

Part#	Material	Quality	Critical Tip Measurement (CTM)	
GG-SA	Anti-Mag. Neverust®	★★★	.02" X .012"	.04mm X .012mm

STRAIGHT STRONG POINT TWEEZERS

HIGH ★★★
FINE ★★
GENERAL ★
PRECISION

The '00' series of tweezers are among the most common used today. Featuring a robust frame and strong points. The '000' style offers radius inside edges on the tips to prevent the marring of delicate wires. The '00B' style features serrated grips for better control. The '00D' style features serrated points & handle for better gripping.

STRONG POINTS

Length 4.5" (113mm)

Part#	Material	Quality	Critical Tip Measurement (CTM)	
00	Carbon Steel	★★★	.018" X .010"	.45mm X .25mm
00-S	Stainless Steel	★★★	.018" X .010"	.45mm X .25mm
00-SA	Anti-Mag. Neverust®	★★★	.018" X .010"	.45mm X .25mm
00-SA-EC*	Anti-Mag. Neverust®	★★★	.018" X .010"	.45mm X .25mm
00-PI	Carbon Steel	★★		
00-SA-PI	Anti-Mag. SS	★★		
00-SE	Carbon Steel	★		
00-SA-SE	Anti-Mag. SS	★		

00-SA-EC* - Epoxy Coated

STRONG POINTS - RADIUS INSIDE EDGES

Length 4.75" (119mm)

Part#	Material	Quality	Critical Tip Measurement (CTM)	
000-SA	Anti-Mag. Neverust®	★★★	.018" X .010"	.45mm X .25mm
000-SA-PI	Anti-Mag. SS	★★		

STRONG POINTS - SERRATED HANDLES

Length 4.75" (119mm)

Part#	Material	Quality	Critical Tip Measurement (CTM)	
00B-SA	Anti-Mag. Neverust®	★★★	.018" X .010"	.45mm X .25mm
00B-SA-PI	Anti-Mag. SS	★★		
00B-SA-SE	Anti-Mag. SS	★		

STRONG SERRATED POINTS - SERRATED HANDLES

Length 4.75" (119mm)

Part#	Material	Quality	Critical Tip Measurement (CTM)	
00D	Carbon Steel	★★★	.018" X .010"	.45mm X .25mm
00D-SA	Anti-Mag. Neverust®	★★★	.018" X .010"	.45mm X .25mm
00D-SA-PI	Anti-Mag. SS	★★		
00D-SA-SE	Anti-Mag. SS	★		

STRAIGHT MEDIUM POINT TWEEZERS

The following styles offer medium points. The 'AC' style is very strong and features serrated grips and robust points for better control. The other styles all feature serrated points for better gripping power.

STRONG MEDIUM POINTS - SERRATED HANDLES

Length 4.25" (106mm)

Part#	Material	Quality	Critical Tip Measurement (CTM)	
AC	Carbon Steel	★★★	.024" X .014"	.6mm X .35mm
AC-SA	Anti-Mag. Neverust®	★★★	.024" X .014"	.6mm X .35mm
AC-PI	Carbon Steel	★★		
AC-SA-PI	Anti-Mag. SS	★★		
AC-SA-SE	Anti-Mag. SS	★		

MEDIUM SERRATED POINTS - SERRATED HANDLES

Length 6.5" (163mm)

Part#	Material	Quality	Critical Tip Measurement (CTM)	
19-S	Stainless Steel	★★★	.027" X .024"	.7mm X .6mm

MEDIUM SERRATED POINTS - SERRATED HANDLES

Length 4.5" (113mm)

Part#	Material	Quality
20-SA-PI	Anti-Mag. SS	★★

MEDIUM SERRATED POINTS - SERRATED HANDLES - GUIDE PIN

Length 4.5" (113mm)

Part#	Material	Quality
20A-S-SE	Stainless Steel	★

STRAIGHT ROUND FINE POINT TWEEZERS

HIGH GENERAL PRECISION ★★★ ★

The '0A' style has the only round tips available. It is ideal for forming leads without marring the lead. The styles '0' and '00C' both are general purpose tweezers not normally associated with work under a scope.

ROUND MICRO FINE POINTS

Length 4.75" (119mm)

Part#	Material	Quality	Critical Tip Measurement (CTM)	
0A	Carbon Steel	★★★	.004" X .002"	.1mm X .05mm

FINE POINTS

Length 4.75" (119mm)

Part#	Material	Quality	Critical Tip Measurement (CTM)	
0	Carbon Steel	★★★	.007" X .004"	.17mm X .1mm
0-SA	Anti-Mag. Neverust®	★★★	.007" X .004"	.17mm X .1mm
0-SA-SE	Anti-Mag. SS	★		

FINE POINTS

Length 4.25" (106mm)

Part#	Material	Quality	Critical Tip Measurement (CTM)	
00C	Carbon Steel	★★★	.018" X .010"	.45mm X .25mm
00C-SA	Anti-Mag. Neverust®	★★★	.018" X .010"	.45mm X .25mm
00C-SA-SE	Anti-Mag. SS	★		

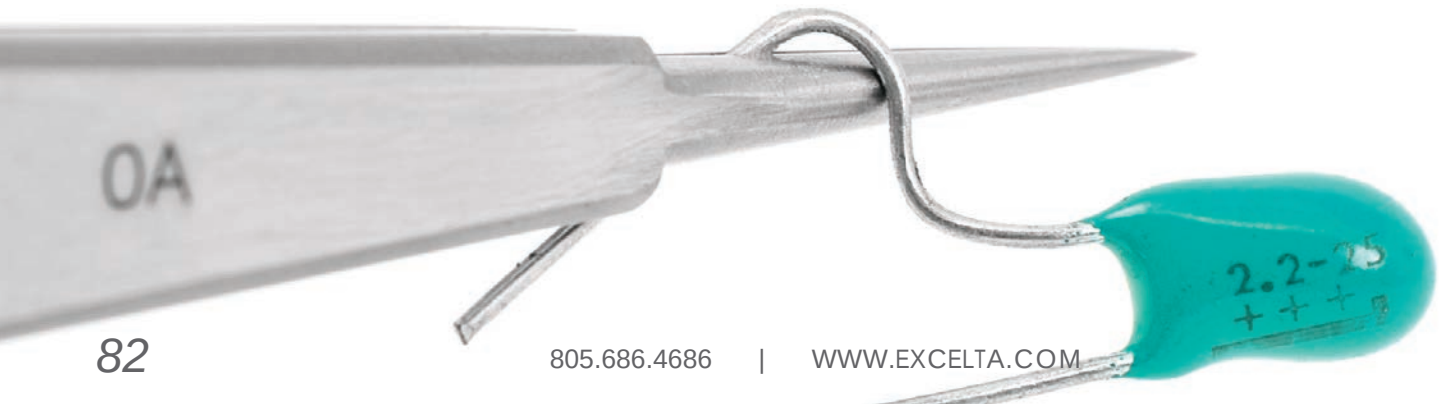

STRAIGHT BROAD/MEDIUM POINT TWEEZERS

The '21' series are primarily used for handling large items. They are strong with serrated points and are offered from 6"-24" long with serrated bodies for better control of the tweezer. The '231' series is a general purpose tweezer offered with or without serrated points.

BROAD SERRATED POINTS - SERRATED HANDLES

Part#	Material	Quality	Critical Tip Measurement (CTM)		Length
21-6-SA	Anti-Mag. Neverust®	★★★	.078" X .039"	2.00mm X 1.0mm	6" (150mm)
21-8-SA	Anti-Mag. Neverust®	★★★	.098" X .059"	2.45mm X 1.5mm	8" (200mm)
21-SA-PI	Anti-Mag. SS	★★			6" (150mm)
21-SA-SE	Anti-Mag. SS	★			6" (150mm)
21-SA-SE-8	Anti-Mag. SS	★			8" (200mm)
21-SA-SE-12	Anti-Mag. SS	★			12" (300mm)
21-SA-SE-18	Anti-Mag. SS	★			18" (450mm)
21-SA-SE-24	Anti-Mag. SS	★			24" (600mm)

MEDIUM POINTS - *SERRATED POINTS

Length 4.75" (119mm)

Part#	Material	Quality
231-SA-SE*	Anti-Mag. SS	★
231A-SA-SE	Anti-Mag. SS	★

ANGLED MEDIUM POINT TWEEZERS

HIGH PRECISION ★★★
FINE ★★
GENERAL ★

These tweezers are primarily used for handling large items. They are strong with serrated points and are offered from 6”-8” long. The body is serrated for better control of the tweezer. All of these tools are angled for better visibility.

45° ANGLED MEDIUM SERRATED POINTS - SERRATED HANDLES - GUIDE PIN — Length 5.5” (138mm)

Part#	Material	Quality	Critical Tip Measurement (CTM)	
22	Carbon Steel	★★★	.032" X .025"	.8mm X .63mm
22-SA	Anti-Mag. Neverust®	★★★	.032" X .025"	.8mm X .63mm

45° ANGLED MEDIUM SERRATED POINTS - SERRATED HANDLES - GUIDE PIN

Part#	Material	Quality	Critical Tip Measurement (CTM)		Length
24-6-SA	Anti-Mag. Neverust®	★★★	.019" X .012"	.5mm X .3mm	6" (150mm)
24-SA-PI	Anti-Mag. SS	★★			6" (150mm)
24-SA-SE	Anti-Mag. SS	★			6" (150mm)
24-8-SA-SE	Anti-Mag. SS	★			8" (200mm)

45° ANGLED MEDIUM SERRATED POINTS - VINYL HANDLES - GUIDE PIN — Length 6.0” (150mm)

Part#	Material	Quality	Critical Tip Measurement (CTM)	
24-SA-SE-PH	Anti-Mag. SS	★	.018" X .010"	.45mm X .25mm

45° CURVED MEDIUM SERRATED POINTS - SERRATED HANDLES - GUIDE PIN — Length 4.5” (113mm)

Part#	Material	Quality
24A-S-SE	Stainless Steel	★

TAPERED FLAT ROUND POINT TWEEZERS

Both the '2A' and the 'F' styles feature flat thin wide tips for handling items like labels or SMD components. The '52A' style is a modified 2A-SA with an 'anti-crush' feature which allows the tips to collapse when too much pressure is applied. The '2AB' style features curved tips.

STRAIGHT TAPERED FLAT ROUND POINTS

Length 4.75" (119mm)

Part#	Material	Quality	Critical Tip Measurement (CTM)	
2A	Carbon Steel	★★★	.059" X .008"	1.5mm X .2mm
2A-S	Stainless Steel	★★★	.059" X .008"	1.5mm X .2mm
2A-SA	Anti-Mag. Neverust®	★★★	.059" X .008"	1.5mm X .2mm
2A-SA-EC*	Anti-Mag. Neverust®	★★★	.059" X .008"	1.5mm X .2mm
2A-SA-PI	Anti-Mag. SS	★★		
2A-S-SE	Stainless Steel	★		
2A-SA-SE	Anti-Mag. SS	★		

2A-SA-EC* - Epoxy Coated

STRAIGHT TAPERED FLAT ROUND POINTS - ANTI-CRUSH FEATURE

Length 4.75" (119mm)

Part#	Material	Quality	Critical Tip Measurement (CTM)	
52A-SA	Anti-Mag. Neverust®	★★★	.059" X .008"	1.5mm X .2mm

STRAIGHT TAPERED FLAT SQUARE POINTS

Length 4.75" (119mm)

Part#	Material	Quality	Critical Tip Measurement (CTM)	
F-SA	Anti-Mag. Neverust®	★★★	.072" X .008"	1.8mm X .2mm
F-SA-PI	Anti-Mag. SS	★★		

43° CURVED FLAT ROUND POINTS

Length 4.5" (113mm)

Part#	Material	Quality	Critical Tip Measurement (CTM)	
2AB-N	Nickel/Silver	★★★	.059" X .008"	1.5mm X .2mm
2AB-SA-PI	Anti-Mag. SS	★★		
2AB-SA-SE	Anti-Mag. SS	★		

LARGE FLAT POINT TWEEZERS

HIGH ★★★
FINE ★★
GENERAL ★
PRECISION

The following tweezers have thin flat wide tips for handling wafers, labels or other flat items. The '8' style is a robust tweezer for straightening component leads.

STRAIGHT LARGE FLAT ROUND POINTS - SERRATED HANDLES — Length 4.75" (119mm)

Part#	Material	Quality	Critical Tip Measurement (CTM)	
25-SA	Anti-Mag. Neverust®	★★★	.137" X .016"	3.5mm X .4mm

STRAIGHT BROAD FLAT POINTS - SERRATED HANDLES — Length 4.25" (106mm)

Part#	Material	Quality	Critical Tip Measurement (CTM)	
27-SA	Anti-Mag. Neverust®	★★★	.247" X .016"	.62mm X .04mm

STRAIGHT BROAD FLAT POINTS - SERRATED HANDLES — Length 4.75" (119mm)

Part#	Material	Quality	Critical Tip Measurement (CTM)	
35A-SA	Anti-Mag. Neverust®	★★★	.288" X .016"	.73mm X .04mm
35A-SA-SE	Anti-Mag. SS	★		

45° OFFSET BROAD FLAT POINTS - SERRATED HANDLES — Length 4.75" (119mm)

Part#	Material	Quality	Critical Tip Measurement (CTM)	
36A-SA	Anti-Mag. Neverust®	★★★	.247" X .016"	6.18mm X .4mm
36A-SA-SE	Anti-Mag. SS	★		

WIDE BODY - FLAT SHARP POINTS — Length 4.25" (106mm)

Part#	Material	Quality
8-SA-PI	Anti-Mag. SS	★★

CROSS ACTION TWEEZERS

These tweezers, unlike standard tweezers, are closed at rest and are ideal for holding small parts over an extended period of time. Additionally, the TWEEZER defines the pressure exerted on the item being held, not the USER!

STRAIGHT VERY FINE POINT

Length 4.25" (106mm)

Part#	Material	Quality
DN-3C-SA-SE	Anti-Mag. SS	★

STRAIGHT VERY FINE POINTS

Length 5" (125mm)

Part#	Material	Quality	Critical Tip Measurement (CTM)
31-SA	Anti-Mag. Neverust®	★★★	.012" X .008" .3mm X .2mm

45° CURVED VERY FINE POINTS

Length 4.5" (113mm)

Part#	Material	Quality
DN-7-SA-SE	Anti-Mag. SS	★

CROSS ACTION TWEEZERS

HIGH PRECISION GENERAL ★★★ ★

These tweezers, unlike standard tweezers, are closed at rest. They are ideal for holding small parts over an extended period of time. Additionally, the TWEEZER defines the pressure exerted on the item being held, not the USER!

STRAIGHT TAPERED FLAT ROUND POINTS — Length 4.75" (119mm)

Part#	Material	Quality
DN-2A-SA-SE	Anti-Mag. SS	★

45° ANGLED FINE POINTS — Length 4.5" (113mm)

Part#	Material	Quality	Critical Tip Measurement (CTM)	
31-SA-C	Anti-Mag. Neverust®	★★★	.012" X .008"	.3mm X .2mm

45° ANGLED STRONG BLUNT POINTS - FIBER HANDLES — Length 6" (150mm)

Part#	Material	Quality	Critical Tip Measurement (CTM)	
30-SA	Anti-Mag. Neverust®	★★★	.08" X .08"	2mm X 2mm
30-S-SE*	Stainless Steel	★		

*Serrated Tips

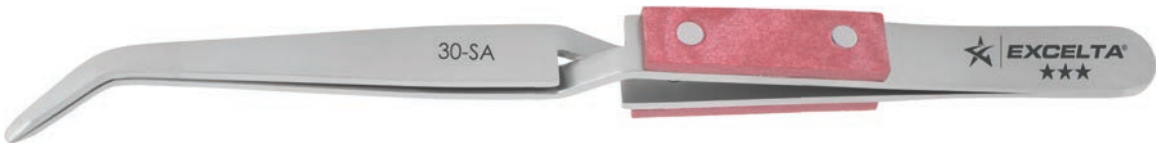

STRAIGHT STRONG BLUNT POINTS - FIBER HANDLES — Length 6" (150mm)

Part#	Material	Quality	Critical Tip Measurement (CTM)	
29-SA	Anti-Mag. Neverust®	★★★	.09" X .07"	2.25mm X 1.75mm
29-S-SE*	Stainless Steel	★		

*Serrated Tips

MINIATURE TWEEZERS

MINIATURE TWEEZERS

Our miniature tweezers and forceps were specifically designed for work under a microscope and engineered to fit small hands. The tip sizes range from .004" X .002" for extremely precise handling of very small items, to .0058" X .008" for working with wider and larger items.

MINIATURE TWEEZERS

HIGH PRECISION ★★★
FINE ★★
GENERAL ★

The style 'M-5" has our smallest points and has relieved tips for greater visibility under high magnification. All of the styles shown below are made specifically for working under a microscope.

STRAIGHT TAPERED MICRO FINE POINTS

Part#	Material	Quality	Critical Tip Measurement (CTM)		Length
M-5-S	Stainless Steel	★★★	.004" X .002"	.1mm X .05mm	2.75" (69mm)
M-5-SA	Anti-Mag. Neverust®	★★★	.004" X .002"	.1mm X .05mm	3.13" (78mm)
M-5-SA-ET	Anti-Mag. Neverust®	★★★	.004" X .002"	.1mm X .05mm	3.75" (94mm)

STRAIGHT TAPERED VERY FINE POINTS — Length 2.75" (69mm)

Part#	Material	Quality	Critical Tip Measurement (CTM)	
M-4-S	Stainless Steel	★★★	.005" X .003"	.13mm X .08mm

STRAIGHT TAPERED FINE POINTS — Length 3.5" (90mm)

Part#	Material	Quality	Critical Tip Measurement (CTM)	
M-4A-S	Stainless Steel	★★★	.009" X .006"	.24mm X .14mm

STRAIGHT FINE POINTS — Length 2.75" (69mm)

Part#	Material	Quality	Critical Tip Measurement (CTM)	
M-3-S	Stainless Steel	★★★	.007" X .004"	.17mm X .1mm

STRAIGHT FINE POINTS — Length 3.5" (90mm)

Part#	Material	Quality	Critical Tip Measurement (CTM)	
0C	Carbon Steel	★★★	.007" X .004"	.17mm X .1mm
0C-SA	Anti-Mag. Neverust®	★★★	.007" X .004"	.17mm X .1mm
0C-SA-PI	Anti-Mag. SS	★★		
0C-SA-SE	Anti-Mag. SS	★		

MINIATURE TWEEZERS

Most of the styles shown below have strong tips and are short for use under the scope. The M-179A-RT is a very fine soft tip tweezer with replaceable tips. It's main feature is, it will not mark or mar delicate items.

STRAIGHT TAPERED VERY FINE POINTS — Length 3.38" (85mm)

Part#	Material	Quality	Critical Tip Measurement (CTM)	
M-2-SA	Anti-Mag. Neverust®	★★★	.008" X .005"	.2mm X .12mm

STRAIGHT TAPERED FLAT ROUND POINTS — Length 2.75" (69mm)

Part#	Material	Quality	Critical Tip Measurement (CTM)	
M-2A-SA	Anti-Mag. Neverust®	★★★	.059" X .008"	1.5mm X .2mm

STRAIGHT MEDIUM SERRATED POINTS - SERRATED HANDLES — Length 3.38" (85mm)

Part#	Material	Quality	Critical Tip Measurement (CTM)	
M-00D	Carbon Steel	★★★	.013" X .004"	.33mm X .1mm
M-00D-SA	Anti-Mag. Neverust®	★★★	.013" X .004"	.33mm X .1mm

STRAIGHT MEDIUM POINTS - SERRATED HANDLES — Length 3.38" (85mm)

Part#	Material	Quality	Critical Tip Measurement (CTM)	
M-AC	Carbon Steel	★★★	.015" X .008"	.38mm X .2mm

STRAIGHT STRONG POINTS — Length 3.5" (90mm)

Part#	Material	Quality	Critical Tip Measurement (CTM)	
M-H-S	Stainless Steel	★★★	.012" X .004"	.3mm X .1mm
M-H-SA	Anti-Mag. Neverust®	★★★	.012" X .004"	.3mm X .1mm

STRAIGHT TAPERED VERY FINE REPLACEABLE POINTS — Length 3.13" (78mm)

Part#	Material	Quality	Critical Tip Measurement (CTM)	
M-179A-RT	Copolymer	★★★★	.025" X .025"	.63mm X .63mm

***Replacement tip 179A-RTX**

CLEANROOM
Ergo-Tweeze

Our **CLEANROOM SAFE** ERGONOMIC tweezer grips are a cut above the rest. They are made of thermoplastic Vulcanizate (TPV) and will not particulate.

*Recommended for controlled environments
*ESD Safe (10^8-10^9 ohms/sq)
*Protects from heat traveling up the tweezer
*Adds comfort when using for prolonged periods

ERGO-TWEEZE®

CLEANROOM SAFE

These CLEANROOM SAFE ergonomic tweezers are made of thermoplastic Vulcanizate (TPV). They are ideal for controlled environments (cleanrooms) and are ESD Safe (10^8-10^9 ohms/sq).

TAPERED TIPS WITH EXTRA FINE POINTS — LENGTH 4.45" (111mm)

Part#	Material	Quality	Critical Tip Measurement (CTM)	
5-SA-R	Anti-Mag. Neverust®	★★★★	.005" X .002"	.125mm X .05mm

NEW ITEM

STRAIGHT TIPS WITH FINE POINTS — LENGTH 4.5" (112mm)

Part#	Material	Quality	Critical Tip Measurement (CTM)	
3C-SA-R	Anti-Mag. Neverust®	★★★★	.007" X .002"	.17mm X .05mm

NEW ITEM

45° CURVED TIPS WITH VERY FINE POINTS — LENGTH 4.75" (118mm)

Part#	Material	Quality	Critical Tip Measurement (CTM)	
7-SA-R	Anti-Mag. Neverust®	★★★★	.007" X .002"	.17mm X .05mm

NEW ITEM

TAPERED TIPS WITH FLAT ROUND POINTS — LENGTH 4.75" (118mm)

Part#	Material	Quality	Critical Tip Measurement (CTM)	
2A-SA-R	Anti-Mag. Neverust®	★★★★	.06" X .01"	1.5mm X .25mm

NEW ITEM

STRAIGHT STRONG POINTS — LENGTH 4.75" (118mm)

Part#	Material	Quality	Critical Tip Measurement (CTM)	
00-SA-R	Anti-Mag. Neverust®	★★★★	.02" X .005"	.5mm X .29mm

NEW ITEM

ERGO-TWEEZE®
TWEEZERS

ERGO-TWEEZE®
TWEEZERS

Our ERGONOMIC tweezer grips are a cut above the rest. These grips can be put on most metal tweezers.

*ESD Safe (10^{10} ohms/sq)
*Protects from heat traveling up the tweezer
*Adds comfort when using for prolonged periods

ERGO-TWEEZE®

ERGONOMIC TWEEZERS

Ergonomic handles protect the operator from heat, offer comfort and are ESD safe (10^{10} ohms/sq)

STRAIGHT TAPERED HIGH PRECISION POINTS — Length 4.75" (119mm)

Part#	Material	Quality	Critical Tip Measurement (CTM)	
5-CO-ET	Cobalt Alloy	★★★★★	.002" X .0004"	.05mm X .01mm
5-S-ET	Stainless Steel	★★★	.004" X .002"	.1mm X .05mm
5-SA-ET	Anti-Mag. Neverust®	★★★	.004" X .002"	.1mm X .05mm
5-SA-PI-ET	Anti-Mag. SS	★★		

STRAIGHT TAPERED HIGH PRECISION POINTS — Length 4.75" (119mm)

Part#	Material	Quality	Critical Tip Measurement (CTM)	
4-SA-ET	Anti-Mag. Neverust®	★★★	.005" X .003"	.13mm X .08mm

STRAIGHT TAPERED VERY FINE POINTS — Length 5.25" (131mm)

Part#	Material	Quality	Critical Tip Measurement (CTM)	
2-SA-ET	Anti-Mag. Neverust®	★★★	.013" X .006"	.33mm X .14mm

STRAIGHT VERY FINE POINTS — Length 5" (125mm)

Part#	Material	Quality	Critical Tip Measurement (CTM)	
1-SA-ET	Anti-Mag. Neverust®	★★★	.008" X .005"	.2mm X .12mm

ERGO-TWEEZE®

ERGONOMIC TWEEZERS

ULTRA HIGH FINE GENERAL

PRECISION ★★★★★ ★★★ ★★ ★

Ergonomic handles protect the operator from heat, offer comfort and are ESD safe (10^{10} ohms/sq).

STRAIGHT VERY FINE POINTS — Length 4.75" (119mm)

Part#	Material	Quality	Critical Tip Measurement (CTM)
3C-CO-ET	Cobalt Alloy	★★★★★	.0031" X .0016" .08mm X .04mm
3C-SA-ET	Anti-Mag. Neverust®	★★★	.0070" X .0040" .17mm X .10mm
3C-SA-PI-ET	Anti-Mag. SS	★★	
3C-SA-SE-ET	Anti-Mag. SS	★	

STRAIGHT VERY FINE POINTS — Length 5.25" (131mm)

Part#	Material	Quality	Critical Tip Measurement (CTM)
3-CO-ET	Cobalt Alloy	★★★★★	.0031" X .0016" .08mm X .04mm
3-SA-ET	Anti-Mag. Neverust®	★★★	.0070" X .0040" .17mm X .10mm
3-SA-PI-ET	Anti-Mag. SS	★★	

LONG STRAIGHT VERY FINE POINTS — Length 6" (152mm)

Part#	Material	Quality	Critical Tip Measurement (CTM)
SS-SA-ET	Anti-Mag. Neverust®	★★★	.008" X .005" .2mm X .12mm

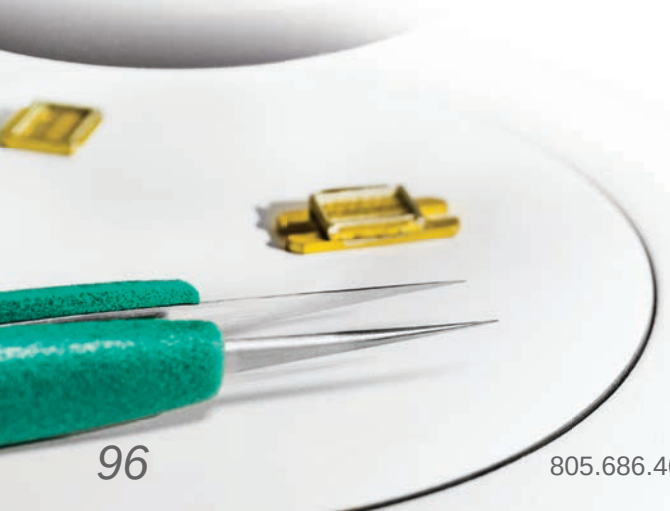

ERGO-TWEEZE®

ERGONOMIC TWEEZERS

Ergonomic handles protect the operator from heat, offer comfort and are ESD safe (10^{10} ohms/sq).

STRAIGHT STRONG FINE POINTS — Length 5.5" (138mm)

Part#	Material	Quality	Critical Tip Measurement (CTM)	
AA-SA-ET	Anti-Mag. Neverust®	★★★	.008" X .008"	.2mm X .2mm
AA-SA-PI-ET	Anti-Mag. SS	★★		

STRAIGHT STRONG MEDIUM POINTS — Length 5" (125mm)

Part#	Material	Quality	Critical Tip Measurement (CTM)	
00-SA-ET	Anti-Mag. Neverust®	★★★	.018" X .010"	.45mm X .25mm
00-SA-PI-ET	Anti-Mag. SS	★★		

STRAIGHT STRONG MEDIUM SERRATED POINTS — Length 5" (125mm)

Part#	Material	Quality	Critical Tip Measurement (CTM)	
00D-SA-ET	Anti-Mag. Neverust®	★★★	.018" X .010"	.45mm X .25mm
00D-SA-PI-ET	Anti-Mag. SS	★★		

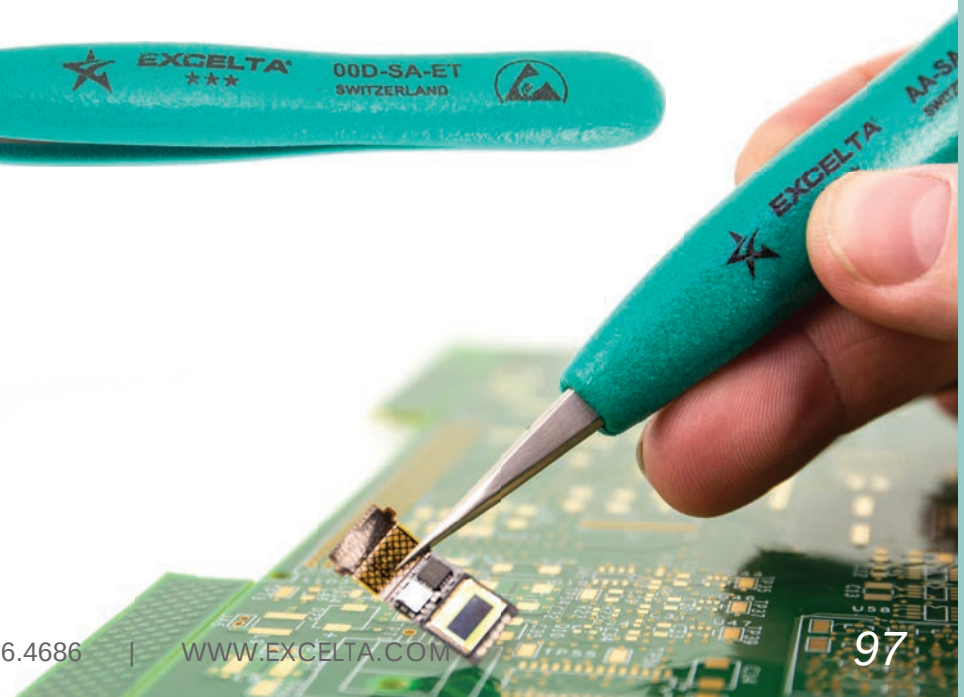

ERGO-TWEEZE®

ERGONOMIC TWEEZERS

ULTRA HIGH FINE PRECISION ★★★★★ ★★★ ★★

Ergonomic handles protect the operator from heat, offer comfort and are ESD safe (10^{10} ohms/sq).

45° CURVED VERY FINE POINTS — Length 5" (125mm)

Part#	Material	Quality	Critical Tip Measurement (CTM)
7-CO-ET	Cobalt Alloy	★★★★★	.0027" X .0012" .07mm X .03mm
7-SA-ET	Anti-Mag. Neverust®	★★★	.0070" X .0040" .17mm X .10mm
7-SA-PI-ET	Anti-Mag. SS	★★	

10° OFFSET VERY FINE POINTS — Length 5" (125mm)

Part#	Material	Quality	Critical Tip Measurement (CTM)
5A-SA-ET	Anti-Mag. Neverust®	★★★	.005" X .003" .13mm X .08mm
5A-SA-PI-ET	Anti-Mag. SS	★★	

45° BENT VERY FINE POINTS — Length 4.75" (119mm)

Part#	Material	Quality	Critical Tip Measurement (CTM)
5B-SA-ET	Anti-Mag. Neverust®	★★★	.004" X .002" .1mm X .05mm
5B-SA-PI-ET	Anti-Mag. SS	★★	

ERGO-TWEEZE®

ERGONOMIC TWEEZERS

Ergonomic handles protect the operator from heat, offer comfort and are ESD safe (10^{10} ohms/sq).

45° OBLIQUE WITH VERY FINE POINTS — Length 5” (125mm)

Part#	Material	Quality	Critical Tip Measurement (CTM)
51-CO-ET	Cobalt Alloy	★★★★★	.0020" X .0004" .05mm X .01mm
51-SA-PI-ET	Anti-Mag. SS	★★	

70° ANGLED WITH FLAT SHARP POINTS — Length 5” (125mm)

Part#	Material	Quality	Critical Tip Measurement (CTM)
6-SA-ET	Anti-Mag. Neverust®	★★★	.007" X .004" .17mm X .1mm
6-SA-PI-ET	Anti-Mag. SS	★★	

STRAIGHT TAPERED WITH FLAT ROUND POINTS — Length 5.25” (131mm)

Part#	Material	Quality	Critical Tip Measurement (CTM)
2A-SA-ET	Anti-Mag. Neverust®	★★★	.059" X .008" 1.5mm X .2mm
2A-SA-PI-ET	Anti-Mag. SS	★★	

SMALL PARTS HANDLING

These tweezers were developed to handle very small wires and parts. Each has its own unique characteristics.

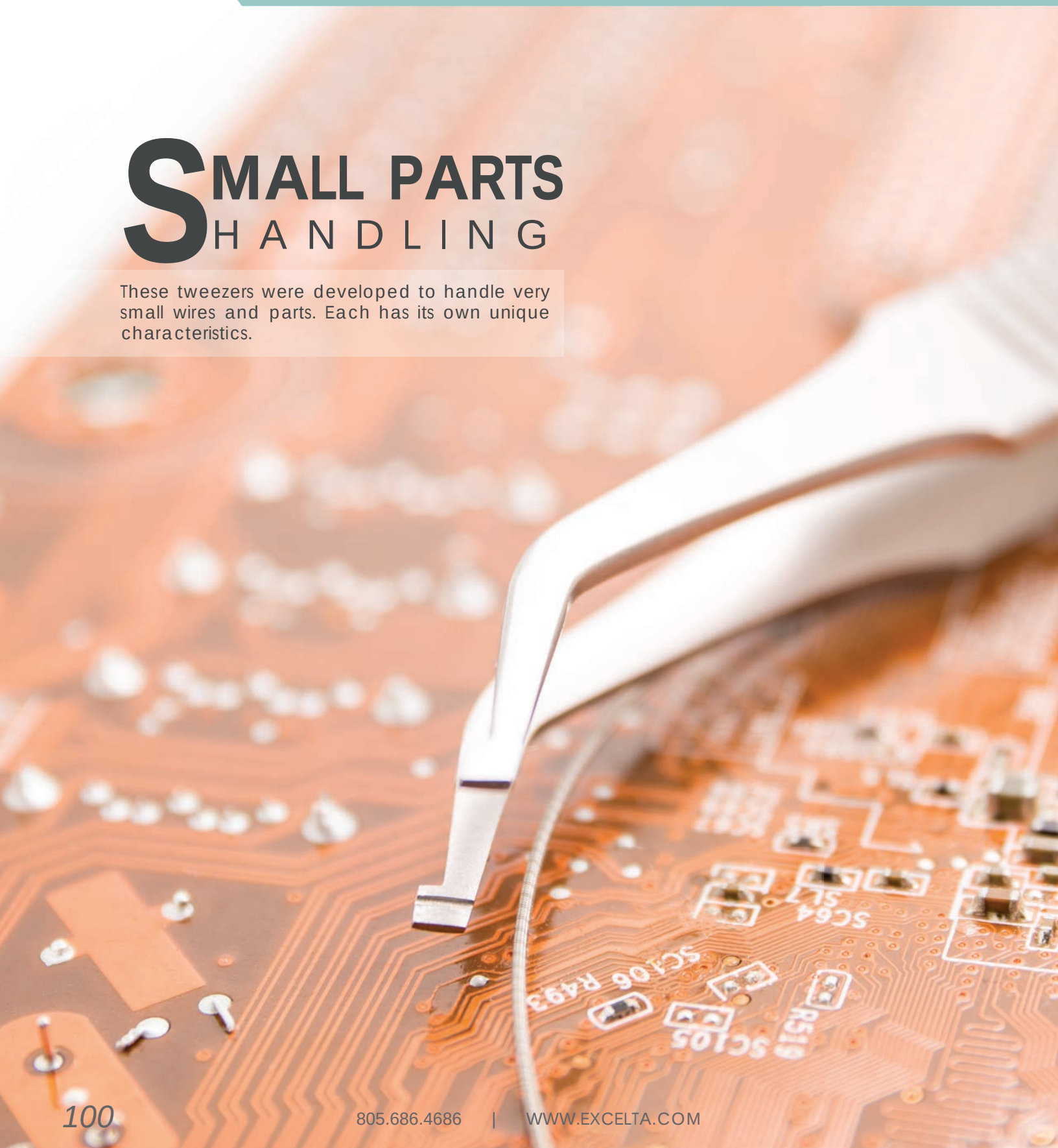

PADDLE TIPPED TWEEZERS

These tweezers are specifically designed to handle surface mount components. They are also ideal for handling very small rectangular items. The paddles add more 'surface contact' for greater control. By design, the tips are much more robust than a pointed tweezer, hence a longer life.

ANGULATED - ANTI-CRUSH DEVICE — Length 4.5"(115mm)

102A-SA

The wider point is designed for easy manipulation of most chips and miniature components. Anti-crush device has been added to reduce chip breakage. They are made of Anti-Magnetic Neverust® Stainless Steel.

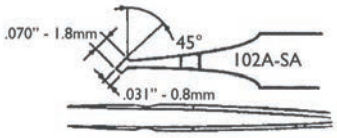

CURVED — Length 4.25" (110mm)

103-SA (.060" x .024" Paddle)
123-SA (.028" x .020" Paddle)

The angled tips are very helpful for placing many types of S.M.D. resistors and capacitors. They are made of Anti-Magnetic neverust Stainless Steel (AISI 316L).

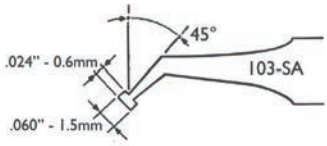

OFF-SET — Length 4.5" (115mm)

104-SA

The wider paddle points provide perfect control when manipulating and placing SOT-89 transistors and monolithic chip capacitors. It is made of Anti-Magnetic Neverust® Stainless Steel.

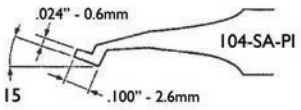

ANGLED — Length 4.5" (115mm)

109-SA

The small points are set at a 45° angle for working in dense areas. They are made of Anti-Magnetic Stainless Steel (AISI 316L).

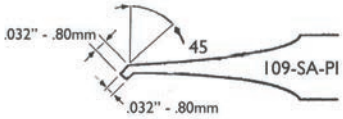

S.M.D. HANDLING TWEEZERS

HIGH PRECISION ★★★

The following tweezers have small grooves or holes in the tips for handling small wires.

TRANSVERSE — **Length 4.25" (110mm)**

110-SA ★★★

The small groove on the inside of the points provides better control when placing small parts and wires. It is made of Anti-Magnetic Neverust® Stainless Steel.

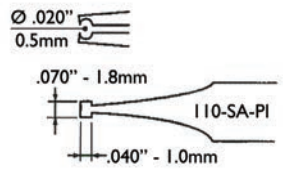

STRAIGHT — **Length 5.5" (140mm)**

121-SA ★★★

The thin flat tips are cut at an angle making this tweezer ideal for picking parts from a Gel Pak. It is made of Anti-Magnetic Neverust® Stainless Steel.

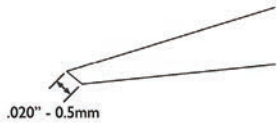

CURVED — **Length 4.25" (110mm)**

111-SA ★★★

The angle of the tips and the small .02" (.5mm) hole will firmly hold many types of SMD components. It is made of Anti-Magnetic Neverust® Stainless Steel.

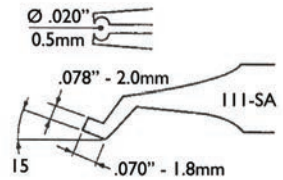

CURVED — **Length 4.25" (110mm)**

115-SA ★★★

The .02" (.5mm) groove on the inside of the tip is designed on an angle for holding and placing cylindrical devices. It is made of Anti-Magnetic Neverust® Stainless Steel.

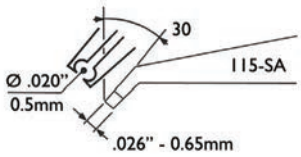

S.M.D. HANDLING TWEEZERS

The following tweezers have grooved tips or holes in the tips for handling small wires or cylindrical devices or, tips that meet in a parallel fashion. While they were designed for surface mount applications, they may be uniquely qualified to handle a variety of tasks where small items are being handled.

STRAIGHT — Length 4.25" (110mm)

116-SA ★★★

The tips have a .04" (1mm) groove for handling small cylindrical devices. It is made of Anti-Magnetic Neverust® Stainless Steel.

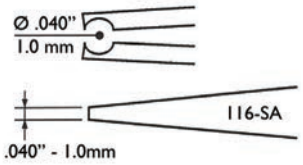

BENT TIP — Length 4.25" (110mm)

125-SA ★★★

The tips have a .02" (.5mm) slot in the end which is great for picking and placing of 402 resistors. It is made of Anti-Magnetic Neverust® Stainless Steel.

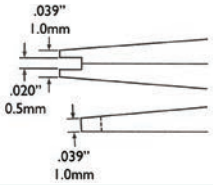

STRAIGHT TIP — Length 4.5" (115mm)

122-SA ★★★

The strong flat tips will firmly hold components when desoldering. It is made of Anti-Magnetic Neverust® Stainless Steel.

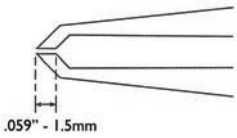

CURVED TIP — Length 4.25" (110mm)

124-SA ★★★

The unique shape tips are helpful in placing SOT-23 and TO-236 packages. It is made of Anti-Magnetic Neverust® Stainless Steel.

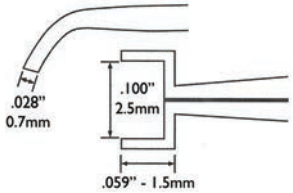

STRAIGHT TIP — Length 4.25" (110mm)

126-SA ★★★

The fine tip and parallel closing jaws are very useful for routing jumper wires on PC boards. It is made of Anti-Magnetic Neverust® Stainless Steel.

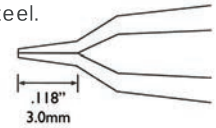

SMALL PARTS HANDLING
TWEEZERS

ULTRA HIGH GENERAL PRECISION ★★★★★ ★★★ ★

These tweezers have been developed to handle very specific tasks. It is important to note we encourage the tip dimensions to fit your exact application.

FOR HOLDING CYLINDRICAL PARTS — **Length 4.5" (115mm)**

815-SA-SE ★

This tweezer can handle many types of round components and electronic devices. The inside hole diameter is .060" (1.5mm). It is made of Anti-Magnetic Stainless Steel.

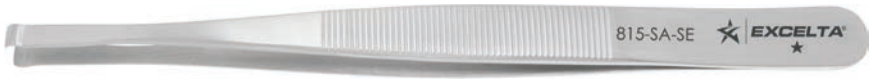

FOR HOLDING CYLINDRICAL PARTS — **Length 4.5" (115mm)**

815B-SA-SE ★

This tweezer can handle many types of round components and electronic devices. The inside hole diameter is .060"(1.5mm). The 45° offset tip is great for confined areas. It is made of Anti-Magnetic Stainless Steel.

FOR HOLDING SMALL WIRES — **Length 4.25" (110mm)**

40-S ★★★

This tweezer was specifically made to hold very small wires via the .015"(.38mm) diameter hole near the tips. It is made of Stainless Steel.

FOR HOLDING SMALL WIRES — **Length 5" (127mm)**

116-CF ★★★★★

This straight Carbon Fiber tipped tweezer features a .039" (1mm) hole in the tips. This tool is ideal for handling delicate wires and small screws. The body is made of stainless steel. The tips are conductive (10^2 ohms/sq). **Replacement tips - 116-CF-RTX**

FOR HOLDING SMALL SCREWS — **Length 6.5" (165mm)**

31B-SA-SE ★

The special grooves in the tips hold small screws. It is ideal for 'starting' the screws. Also useful when working in dense and hard to reach areas. It is made of Anti-Magnetic Stainless Steel.

WAFER HANDLING
TWEEZERS

WAFER HANDLING

These tweezers are ideal for handling very thin wafers up to and exceeding 8" in diameter. The large, thin, flat tips easily slip under and securely hold the wafers. They also feature a special engaging slot, which facilitates handling. Each wafer tweezer is available in a variety of head styles and made of anti-magnetic Stainless Steel.

WAFER HANDLING
TWEEZERS

FINE PRECISION ★★

Our Wafer Handling Tweezers include a special engaging slot for easy handling of wafers.

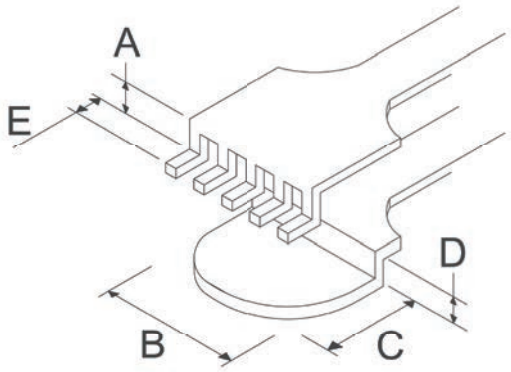

3" WAFER HANDLING TWEEZERS — Length 4.75" (119mm)

390-SA-PI ★★
A. .157" (4mm)
B. .257" (6.5mm)
C. .197" (5mm)
D. .138" (3.5mm)

390L-SA-PI ★★
A. .157" (4.0mm)
B. .257" (6.5mm)
C. .197" (5.0mm)
D. .138" (3.5mm)
E. .060" (1.5mm)

390T-SA-PI ★★
A. .285" (7.2mm)
B. .257" (6.5mm)
C. .197" (5.0mm)
D. .138" (3.5mm)

391-SA-PI ★★
A. .157" (4.0mm)
B. .257" (6.5mm)
C. .197" (5.0mm)
D. .138" (3.5mm)
E. .060" (1.5mm)

391P-SA-PI ★★
A. .157" (4.0mm)
B. .257" (6.5mm)
C. .197" (5.0mm)
D. .138" (3.5mm)
E. .060" (1.5mm)

4" WAFER HANDLING TWEEZERS — Length 5" (125mm)

490-SA-PI ★★
A. .157" (4.0mm)
B. .472" (12mm)
C. .275" (7.0mm)
D. .125" (3.1mm)

490L-SA-PI ★★
A. .157" (4.0mm)
B. .472" (12mm)
C. .275" (7.0mm)
D. .138" (3.5mm)
E. .125" (3.1mm)

490T-SA-PI ★★
A. .157" (4.0mm)
B. .472" (12mm)
C. .275" (7.0mm)
D. .138" (3.5mm)

491-SA-PI ★★
A. .157" (4.0mm)
B. .472" (12mm)
C. .275" (70mm)
D. .138" (3.5mm)
E. .125" (3.1mm)

491D-SA-PI ★★
A. .157" (4mm)
B. .472" (12mm)
C. .275" (7mm)
D. .138" (3.5mm)
E. .125" (3.1mm)

491P-SA-PI ★★
A. .157" (4.0mm)
B. .472" (12mm)
C. .275" (7.0mm)
D. .138" (3.5mm)
E. .125" (3.1mm)

***Add a 'B' to any model for a 20° bend in the body to improve handling**

WAFER HANDLING TWEEZERS

Made from Anti-magnetic Stainless Steel.

5” WAFER HANDLING TWEEZERS

Length 5” (125mm)

590-SA-PI ★★
A. .157" (4.0mm)
B. .638" (16.2mm)
C. .355" (9.0mm)
D. .106" (2.7mm)

590L-SA-PI ★★
A. .180" (4.5mm)
B. .638" (16.2mm)
C. .355" (9.0mm)
D. .106" (2.7mm)
E. .125" (3.1mm)

590T-SA-PI ★★
A. .257" (6.5mm)
B. .638" (16.2mm)
C. .355" (9.0mm)
D. .106" (2.7mm)

591-SA-PI ★★
A. .157" (4.0mm)
B. .638" (16.2mm)
C. .355" (9.0mm)
D. .106" (2.7mm)
E. .125" (3.1mm)

591D-SA-PI ★★
A. .157" (4.0mm)
B. .638" (16.2mm)
C. .355" (9.0mm)
D. .106" (2.7mm)
E. .125" (3.1mm)

591P-SA-PI ★★
A. .157" (4.0mm)
B. .638" (16.2mm)
C. .355" (90mm)
D. .106" (2.7mm)
E. .125" (3.1mm)

6” WAFER HANDLING TWEEZERS

Length 5”(125mm)

690-SA-PI ★★
A. .150" (3.8mm)
B. .780" (19.8mm)
C. .355" (9.0mm)
D. .106" (2.7mm)

690L-SA-PI ★★
A. .140" (3.5mm)
B. .780" (19.8mm)
C. .355" (9.0mm)
D. .106" (2.7mm)
E. .125" (3.1mm)

690T-SA-PI ★★
A. .257" (6.5mm)
B. .780" (19.8mm)
C. .355" (9.0mm)
D. .106" (2.7mm)

691-SA-PI ★★
A. .118" (3.0mm)
B. .780" (19.8mm)
C. .355" (9.0mm)
D. .106" (2.7mm)
E. .125" (3.1mm)

691D-SA-PI ★★
A. .118" (3.0mm)
B. .780" (19.8mm)
C. .355" (9.0mm)
D. .106" (2.7mm)
E. .125" (3.1mm)

691P-SA-PI ★★
A. .118" (3.0mm)
B. .780" (19.8mm)
C. .355" (9.0mm)
D. .106" (2.7mm)
E. .125" (3.1mm)

8” WAFER HANDLING TWEEZERS

Length 5”(125mm)

891-SA ★★★
A. .150" (3.8mm)
B. 1.12" (28.5mm)
C. .450" (11.5mm)
D. .100" (2.15mm)

890L-SA ★★★
A. .150" (3.8mm)
B. 1.12" (28.5mm)
C. .450" (11.5mm)
D. .100" (2.15mm)

***Add a ‘B’ to any model for a 20° bend in the body to improve handling**

REPLACEABLE TIP
TWEEZERS

REPLACEABLE TIP TWEEZERS

Replaceable Tip Tweezers are offered in a variety of different tip materials. The frames are made of stainless steel and are anti-magnetic.

Page 109 Peek - for high temperature - non-scratching or marring
Page 110 Copolymer - cleanroom safe - non-scratching or marring
Page 111 Carbofib® - conducive - non-scratching or marring
Page 113/114 Acetal - very soft - non-scratching or marring

PEEK REPLACEABLE TIP TWEEZERS

These tweezers are constructed from a Neverust® stainless steel anti-magnetic frame and feature PEEK tips. PEEK is a high temperature thermoplastic with excellent chemical resistance. Inert to all common solvents, it resists a wide range of inorganic liquids. These tools have a working temperature of 249°C (480°F). Peek is static dissipative (10^7 ohms/sq). Peek tweezers are designed for safe handling of delicate parts and feature finger serrations for more control.

STRAIGHT POINTS — Length 5" (125mm)

Part#	Replacement Tip	Critical Tip Measurement (CTM)	
162A-RT	162A-RTX	.02" X .02"	.5mm X .5mm

STRAIGHT POINTS — Length 5" (125mm)

Part#	Replacement Tip	Critical Tip Measurement (CTM)	
162B-RT	162B-RTX	.03" X .03"	.7mm X .7mm

STRAIGHT POINTS — Length 5" (125mm)

Part#	Replacement Tip	Critical Tip Measurement (CTM)	
162C-RT	162C-RTX	.04" X .04"	1mm X 1mm

STRAIGHT POINTS — Length 5" (125mm)

Part#	Replacement Tip	Critical Tip Measurement (CTM)	
162D-RT	162D-RTX	.08" X .016"	2mm X .4mm

50° CURVED POINTS — Length 5" (125mm)

Part#	Replacement Tip	Critical Tip Measurement (CTM)	
762A-RT	762A-RTX	.02"x.012"	.5mm X .3mm

COPOLYMER REPLACEABLE TIP TWEEZERS

EXTREME PRECISION ★★★★

Copolymer tips are designed for handling delicate items. They are static dissipative (10^7-10^9 ohms/sq), temperature resistant to 90°C (195°F) and are silicon & chloride free. The frames are made of Neverust® stainless steel and are anti-magnetic. The tips are easily replaced and designed for safe handling of delicate parts in a cleanroom environment.

STRAIGHT POINTS

Length 5.125" (128mm)

Part#	Replacement Tip	Critical Tip Measurement (CTM)	
179A-RT	179A-RTX	.02" X .01"	.5mm X .25mm

STRAIGHT POINTS

Length 5.125" (128mm)

Part#	Replacement Tip	Critical Tip Measurement (CTM)	
179D-RT	179D-RTX	.08" X .25"	2mm X 6.25mm

REVERSE ACTION STRAIGHT POINTS

Length 5.5" (138mm)

Part#	Replacement Tip	Critical Tip Measurement (CTM)	
179DN-RT	179D-RTX	.08" X .25"	2mm X 6.25mm

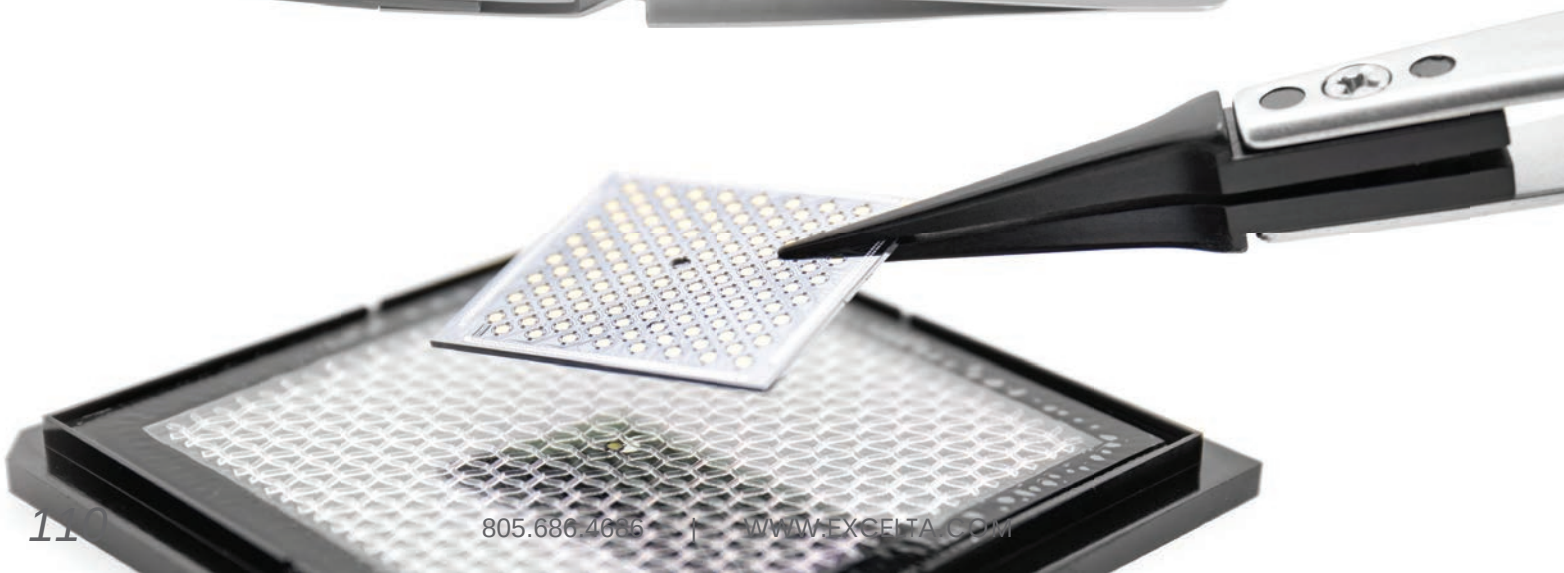

CARBOFIB® REPLACEABLE TIP TWEEZERS

Carbofib® is a PTFE base material with 30% carbon fibers added. Carbofib is conductive with a surface resistivity of 10^2 ohms/sq., and temperature resistant up to 121°C (249°F).

STRAIGHT TAPERED POINTS — Length 5" (125mm)

Part#	Replacement Tip	Critical Tip Measurement (CTM)	
159-RT	159-RTX	.012" X .008"	.3mm X .2mm
159G-RT	159G-RTX	.005" X .025"	.125mm X .625mm

*Cross-Action version - 159-RTN
Ergo Version - 159-RT-ET

STRAIGHT POINTS — Length 5" (125mm)

Part#	Replacement Tip	Critical Tip Measurement (CTM)	
159A-RT	159A-RTX	.02" X .015"	.5mm X .38mm

STRAIGHT POINTS — Length 5" (125mm)

Part#	Replacement Tip	Critical Tip Measurement (CTM)	
159B-RT	159B-RTX	.04" X .038"	1mm X .95mm

51° CURVED POINTS — Length 5" (125mm)

Part#	Replacement Tip	Critical Tip Measurement (CTM)	
759-RT	759-RTX	.012" X .025"	.3mm X .63mm

*Cross-Action version - 759-RTN

CARBOFIB® REPLACEABLE TIP TWEEZERS

HIGH PRECISION ★★★

These frames are made of Neverust® stainless steel and are anti-magnetic. The tips are easily replaced and are designed for safe handling of delicate parts.

STRAIGHT POINTS — Length 5" (125mm)

Part#	Replacement Tip	Critical Tip Measurement (CTM)	
159D-RT	159D-RTX	.06" X .015"	1.5mm X .38mm

*Cross-Action version - 159D-RTN

STRAIGHT POINTS — Length 5" (125mm)

Part#	Replacement Tip	Critical Tip Measurement (CTM)	
159C-RT	159C-RTX	.08" X .055"	.2mm X 1.38mm
159F-RT	159F-RTX	.08" X .05"	.2mm X 1.25mm

STRAIGHT POINTS — Length 5" (125mm)

Part#	Replacement Tip	Critical Tip Measurement (CTM)	
159E-RT	159E-RTX	.12" X .038"	3mm X .95mm

40° CURVED POINTS — Length 5" (125mm)

Part#	Replacement Tip	Critical Tip Measurement (CTM)	
759D-RT	759D-RTX	.06" X .018"	1.5mm X .45mm

REPLACEABLE TIP
MINIATURE TWEEZERS

These frames are made of Neverust stainless steel and are anti-magnetic. The tips are easily replaced and designed for safe handling of delicate parts. The miniature size makes them ideal for use under magnification.

CARBOFIB™ TIPS - Conductive (10² Ohms/Sq)
ACETAL TIPS - Cleanroom Safe (Insulative)

CARBOFIB™ TIPS (10² Ohms/Sq)

Length 4.45" (111.25mm)

Part #	Style	Critical Tip Measurement (CTM)		Replacement Tip
M-159G-RT	Straight	.005" x .025"	.125mm x .625mm	159G-RTX
M-159-RT	Straight	.012" x .008"	.3mm x .2mm	159-RTX
M-159A-RT	Straight	.02" x .015"	.5mm x .38mm	159A-RTX
M-159B-RT	Straight	.04" x .038"	1mm x .95mm	159B-RTX
M-159D-RT	Straight	.06" x .015"	1.5mm x .38mm	159D-RTX
M-159F-RT	Straight	.08" x .05"	2mm x 1.25mm	159F-RTX
M-159C-RT	Straight	.08" x .055"	2mm x 1.38mm	159C-RTX
M-159E-RT	Straight	.12" x .038"	3mm x .95mm	159E-RTX
M-759D-RT	40° Curved	.06" x .015"	1.5mm x .38mm	759D-RTX

NEW ITEM

ACETAL TIPS (Insulative)

Length 4.45" (111.25mm)

Part #	Style	Critical Tip Measurement (CTM)		Replacement Tip
M-159B-RTW	Straight	.04" x .038"	1mm x .95mm	159B-RTWX
M-159D-RTW	Straight	.06" x .015"	1.5mm x .38mm	159D-RTWX
M-159C-RTW	Straight	.08" x .055"	2mm x 1.38mm	159C-RTWX
M-759-RTW	40° Curved	.005" x .025"	.125mm x .625mm	759-RTWX
M-759D-RTW	40° Curved	.06" x .015"	1.5mm x .38mm	759D-RTWX

NEW ITEM

ACETAL REPLACEABLE TIP TWEEZERS

HIGH PRECISION ★★★

Acetal replaceable tip tweezers are electrically insulative and resistant to temperatures up to 85°C (185°F). The frame is anti-magnetic stainless steel and excellent for cleanroom applications.

STRAIGHT POINTS — **Length 5" (125mm)**

Part#	Replacement Tip	Critical Tip Measurement (CTM)	
159B-RTW	159B-RTWX	.04" X .038"	1mm X .95mm

STRAIGHT POINTS — **Length 5" (125mm)**

Part#	Replacement Tip	Critical Tip Measurement (CTM)	
159D-RTW	159D-RTWX	.06" X .015"	1.5mm X .38mm

STRAIGHT POINTS — **Length 5" (125mm)**

Part#	Replacement Tip	Critical Tip Measurement (CTM)	
159C-RTW	159C-RTWX	.08" X .055"	.2mm X 1.38mm

CERAMIC TIP
TWEEZERS

These Zirconia ceramic tipped tweezers are ideal for high temperature applications as they withstand up to 2000°F. Solder will not adhere to them. They are cleanroom safe.
These items do not have replaceable tips.

STRAIGHT TIPS WITH FINE POINTS — LENGTH 5" (125mm)

Part#	Material	Quality	Critical Tip Measurement (CTM)	
277-CE	Anti-Mag. SS	★★★★★	.04"	1.0mm

TAPERED TIPS WITH FLAT ROUND POINTS — LENGTH 5.5" (137.5mm)

Part#	Material	Quality	Critical Tip Measurement (CTM)	
277-CE-ET	Anti-Mag. SS	★★★★★	.04"	1.0mm

STRAIGHT TIPS WITH FINE POINTS — LENGTH 5" (125mm)

Part#	Material	Quality	Critical Tip Measurement (CTM)	
149B-CE	Anti-Mag. SS	★★	.030"	0.75mm

45°ANGLED TIPS WITH FINE POINTS — LENGTH 5" (125mm)

Part#	Material	Quality	Critical Tip Measurement (CTM)	
749A-CE	Anti-Mag. SS	★★	.020"	0.50mm

PLASTIC HANDLING TWEEZERS

Plastic tweezers are an inexpensive alternative to other types of tweezers. In addition, they will not scratch or mar delicate items.

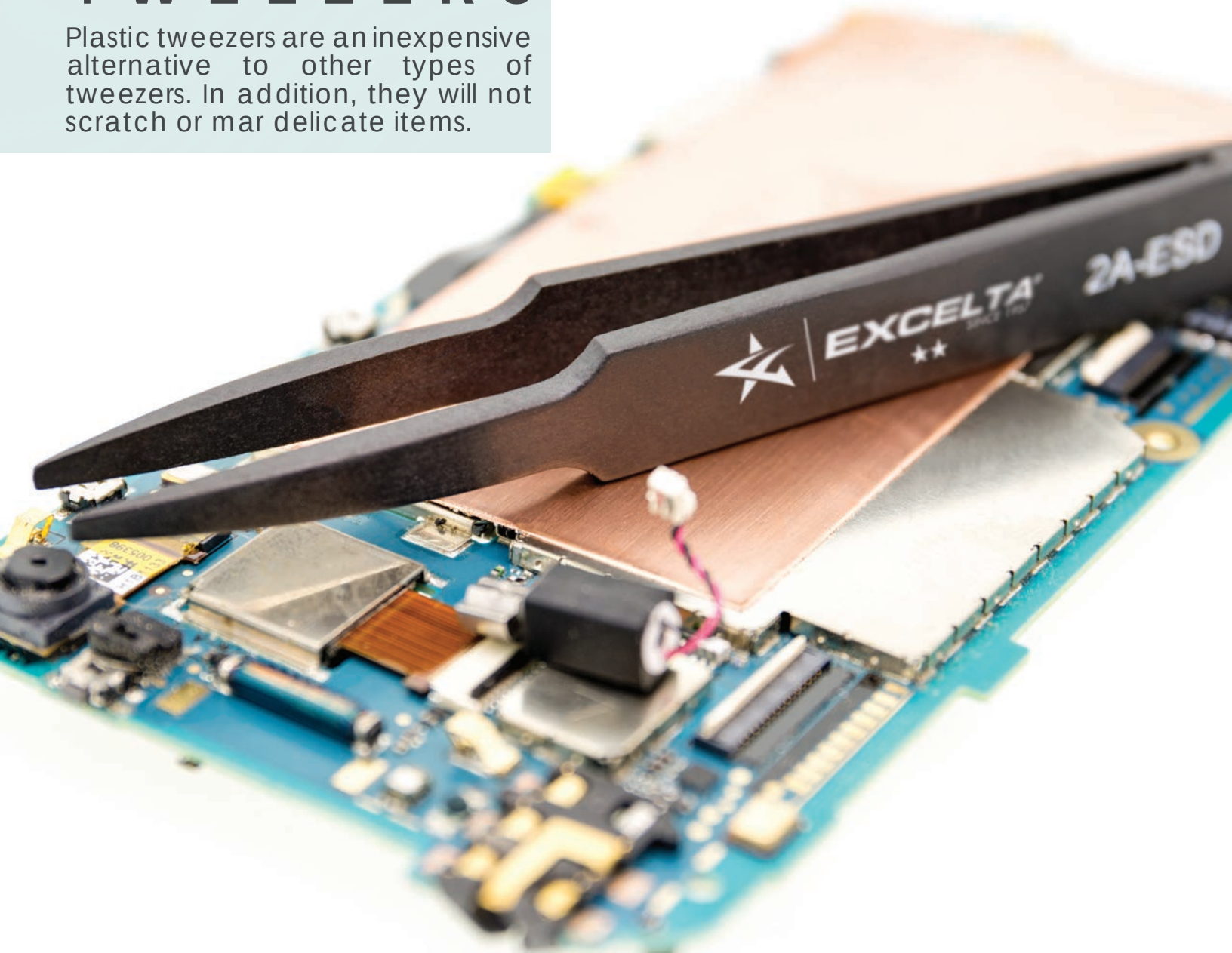

PLASTIC
HANDLING TWEEZERS

These plastic tweezers have a temperature resistance of 100°C (212°F). Surface resistivity is 10^5 ohms/sq. which puts them in the conductive range. They are ideally used to prevent marring or scratching of delicate parts.

STRAIGHT TAPERED FLAT ROUND POINTS — Length 4.625" (115mm)

Part#	Critical Tip Measurement (CTM)	
2A-ESD	.075" X .02"	1.88mm X .5mm

STRAIGHT FLAT POINTS — Length 4.63" (116mm)

Part#	Critical Tip Measurement (CTM)	
609-ESD	.005" X .12"	.13mm X 3mm

STRAIGHT FLAT WIDE POINTS — Length 4.5" (113mm)

Part#	Critical Tip Measurement (CTM)	
35A-ESD	.24" X .005"	6mm X .13mm

STRAIGHT FINE POINTS — Length 4.5" (113mm)

Part#	Critical Tip Measurement (CTM)	
3C-ESD	.025" X .025"	.63mm X .63mm

84° ANGLED BLUNT POINTS — Length 4.75" (119mm)

Part#	Critical Tip Measurement (CTM)	
6-ESD	.05" X .04"	1.25mm X 1mm

CUTTING
TWEEZERS

CUTTING
TWEEZERS

Cutting tweezers are used in a variety of manufacturing applications, including hearing aids, stents, pacemakers and many applications in the miniature electronics field.

PRECISION CUTTING TWEEZERS

The 15A-GW series angled tip cutting tweezer is ideal for general purpose cutting of soft wire up to 0.010". This tool is considered a tip cutter in that the blades meet most predominantly at the tips. All of the force applied to the tweezer gets transferred to the very tip of the tool. The exception is the 'PB' adder, featuring parallel cutting edges. The cut is 'maximum flush' which leaves a very small 'pinch' on the wire.

15A-GW ★★★ Length 4.5" (115mm)

Most common cutting tweezer design in use today. Recommended materials which this tweezer will safely cut are soft copper, gold, silver and magnet wire not larger than .010 in diameter. Flat blades. The epoxy coating is ESD safe (10^5-10^6 ohms/sq) and also prevents oxidation. Made in Switzerland.

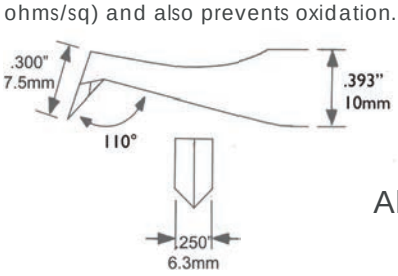

Also Available

15A-GW-OF - Optimum-Flush cutting blades
15A-GW-PB - Parallel cutting blades
15A-GW-M - No epoxy coating
15A-GW-S - Stainless Steel (no epoxy coating)
15A-GW-ET - With ergonomic cushion grip - Shown on pg. 121

15A-GW-PI ★★ Length 4.5" (115mm)

Same as above with a slightly larger head and face. It does not have Epoxy coating. Carbon steel with flame hardened flat blades.

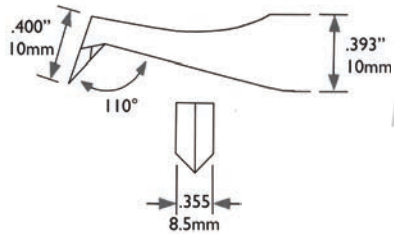

PRECISION CUTTING TWEEZERS

HIGH PRECISION ★★★

The 15A-RW series angled round tip cutting tweezer is ideal for general purpose cutting of soft wire up to 0.010". The cutting blade is much shorter than the 15A-GW and the top of the head has been rounded for better visibility. The cut is 'maximum flush' which leaves a very small 'pinch' on the wire.

15A-RW — Length 4.5"(115mm)

With fine tips and smaller cutting blades, this cutting tweezer can fit into small areas other cutters cannot. Comes with Epoxy coating ESD safe (10^5-10^6 ohms/sq) to prevent rusting. Maximum cutting capacity 32 AWG .008 in. Made in Switzerland.

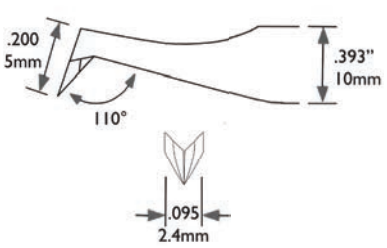

Also Available

15A-RW-OF - Optimum-Flush cutting blades
15A-RW-PB - Parallel cutting blades - Shown Below
15A-RW-M - No epoxy coating
15A-RW-S - Stainless Steel (no epoxy coating)
15A-RW-ET - With ergonomic cushion grip - Shown on pg. 121

15A-RW-PB — PARALLEL BLADES — Length 4.5"(115mm)

Same as above with parallel cutting blades. Carbon steel with corrosion preventing epoxy coating, ESD safe (10^5-10^6 ohms/sq) . Maximum cutting capacity 32 AWG .008 soft copper, gold, silver and magnet wire. Extremely useful in trimming soft silicon or plastic flashing. Made in Switzerland.

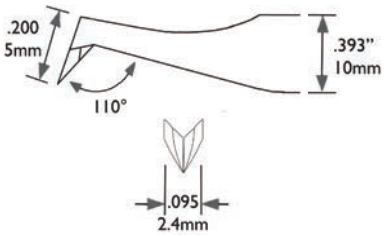

PRECISION CUTTING TWEEZERS

Variations of the standard 15A-GW are shown below. The cutting capacity for these tools are .010" soft wire.

15A-SW — RADIUS FACED — Length 4.5"(115mm)

Similar to the 15A-GW with rounded blades. Designed to cut soft copper wire, gold, silver and magnet wire. Carbon Steel with corrosion preventing epoxy coating ESD safe (10^5-10^6 ohms/sq). Made in Switzerland.

15A-C — SHORT FINE BLADE — Length 4.5"(115mm)

Very fine cutting tweezer. Can be used either vertically or horizontally. Short .275in blade. Excellent for use in difficult cutting areas. Carbon Steel with corrosion preventing epoxy coating ESD safe (10^5-10^6 ohms/sq). Made in Switzerland.

15A-RW-ET — ERGONOMIC — Length 4.5"(115mm)

Same as the 15A-RW with an added Ergonomic cushion grip designed to combat operator fatigue. Also acts as a heat shield. Made in Switzerland.

15A-GW-ET — ERGONOMIC — Length 4.5" (115mm)

Same as the 15A-GW with an added Ergonomic cushion grip designed to combat operator fatigue. Used in Electronic, Military and Biomedical assembly applications where prolonged use is required. Made in Switzerland.

PRECISION CUTTING TWEEZERS

HIGH PRECISION ★★★

The following tweezers are application specific and primarily used for work in a restricted area.

14A-GW — SLIM HIGH PRECISION — Length 4.38"(113mm)

Small head and 100° angle enables work to be done in confined areas and allows greater surface clearance. High Carbon steel designed to cut plastic and silicon flashing as well as soft copper wire no greater than .010. Made in Switzerland.

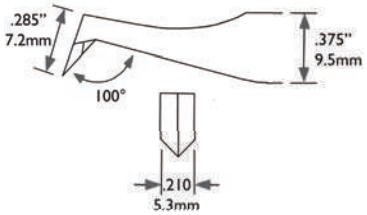

14A-N — LONG PRECISION — Length 4.5"(115mm)

Thin, fine cutting blades enables the tool to be used either vertically or horizontally. Durable carbon steel cutting edges. Maximum cutting capacity .005 Thinner blade design for lightweight and easy handling. Made in Switzerland.

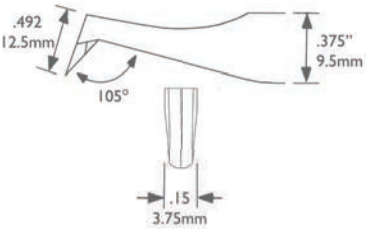

15 — TRANSVERSE END — Length 4.5"(115mm)

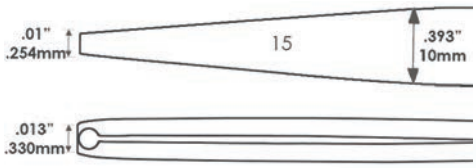

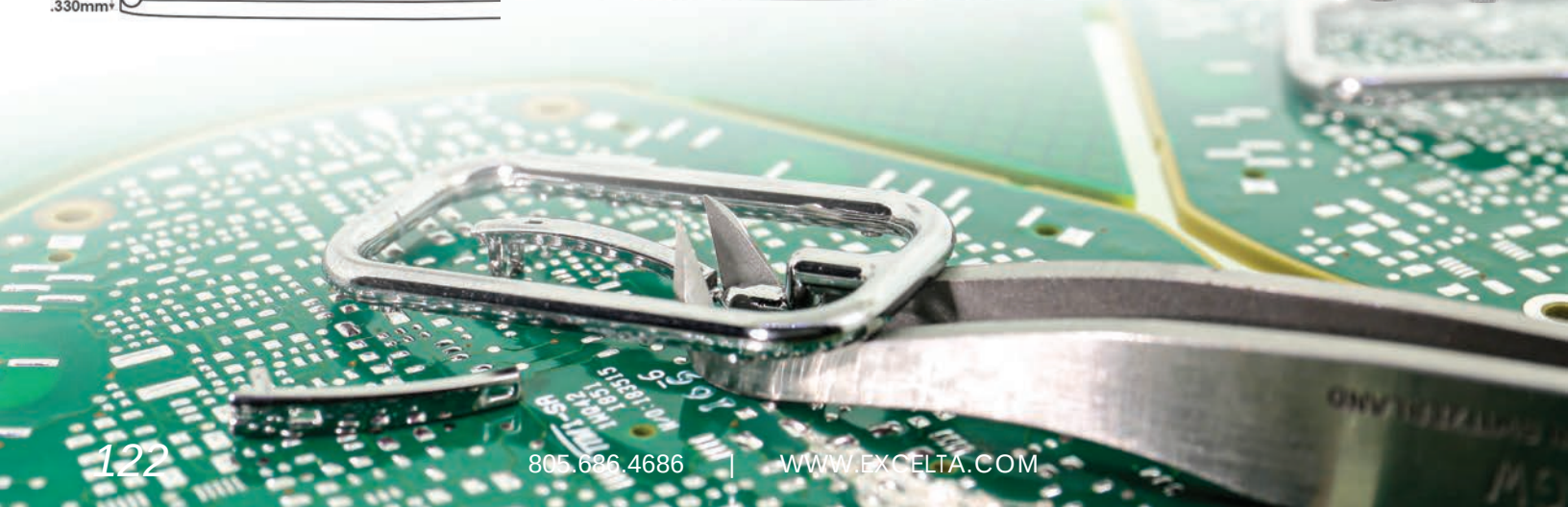

PRECISION CUTTING TWEEZERS

For those applications which require work in a restricted area or under magnification, the following cutting
tweezers allow the accessibility needed. The 52-MW, 53-MW and 54-MW are our smallest cutters.

52-MW — HIGH PRECISION MICRO POINTS — Length 4.5"(115mm)

Excellent for working in dense access areas. Durable carbon steel with black conductive ESD safe (10^5-10^6 ohms/sq) corrosion inhibitor. Cutting capacity .005 soft wire and flashings. Made in Switzerland.

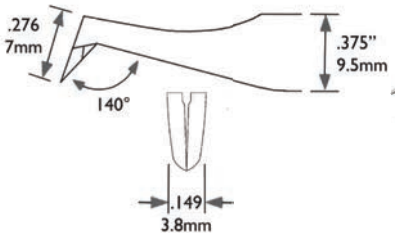

CUTTING CAPACITY .005"(.13mm)

54-MW — HIGH PRECISION MICRO ANGLED POINTS — Length 4.25"(110mm)

Designed for maximum visibility when working under magnification. Black conductive ESD safe (10^5-10^6 ohms/sq) corrosion inhibitor and sharp carbon steel cutting blades. Excellent for work in confined applications. Made in Switzerland.

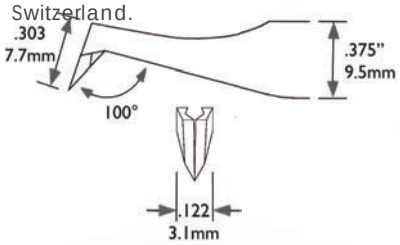

CUTTING CAPACITY .008"(.20mm)

55-MW — ULTRA FINE CUTTING BLADES — Length 4.5"(115mm)

The very finest and smallest cutting blades available. Durable carbon steel blades and black conductive ESD safe (10^5-10^6 ohms/sq) epoxy coating to reduce corrosion and rust. Ultra-fine point makes this cutting tweezer easily fit into areas traditional cutting tweezer cannot fit. Maximum cutting capacity .005 soft wire and flashings. Light weight and easy to manipulate. Made in Switzerland.

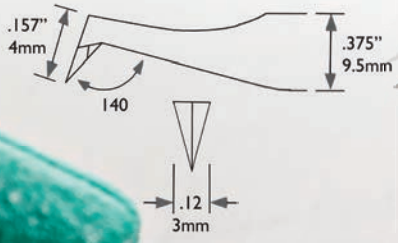

CUTTING CAPACITY .005"(.13mm)

PRECISION WIRE STRIPPING
TWEEZERS

ULTRA PRECISION ★★★★★

Unlike generic wire strippers, the following tools are 'precision' wire strippers. The 15A-ST-PE-XX and the 15A-ST-PE-XX-X tools are individually manufactured for a specific size wire.

15A-ST-PE-XX **INSULATED WIRE** **Length 4.5"(115mm)**

70° angulated stripping tweezer will strip PTFE and other coated wire exactly to AWG gauge without nicking. The unique 'cutting slot' prevents wire alignment issues thus accelerating the process. It is made of carbon steel with flame hardened edges and is epoxy coated to prevent oxidation. It will strip wires from 30AWG to 46AWG. Simply add the wire size to the 15A-ST-PE (i.e. 15A-ST-PE-30 for 30AWG)

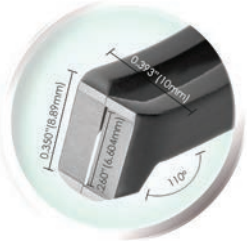

15A-ST-PE-XX-X **MAGNET WIRE** **Length 4.5"(115mm)**

70° angulated stripping tweezer designed to strip Magnet Wire to AWG gauge without nicking. The unique 'cutting slot' prevents wire alignment issues thus accelerating the process. It is made of carbon steel with flame hardened edges and is epoxy coated to prevent oxidation.

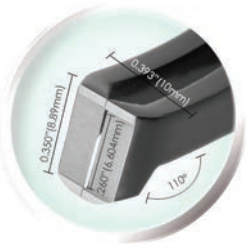

NEW ITEM

PRECISION WIRE STRIPPING

PLIERS

The 510E-US will strip from 18-30AWG wire and, unlike other strippers which can only cut two sides of the insulation, this tool cuts four sides, thus making a very 'clean' strip. The 502E-US-XX is individually manufactured for a specific size wire (insulate).

510E-US

Length 5.5"(137.5mm)

Adjustable V-notch stripper is a precision wire stripper with locking set-screw and can be adjusted for stripping 18-30AWG wire. It features a molded static dissipative (10^8ohms/sq) ergonomic handle with dual leaf springs for smooth action.

502E-US-XX

Length 5.5"(137.5mm)

High precision stripping plier is ideal for stripping PTFE coated wires. It features molded ergonomic static dissipative (10^8ohms/sq) grips with dual leaf springs for smooth action. To order, specify the wire gauge size by indicating the gauge at the end of the reference number (i.e 502E-US-030 for AWG 30). Available in 22, 24, 26, 28, and 30 AWG.

★★★ HIGH PRECISION
★★ FINE PRECISION
★ GENERAL PRECISION

KITSETS

We can design a kit for your exact application, whether it be for dissection or electronic re-work.

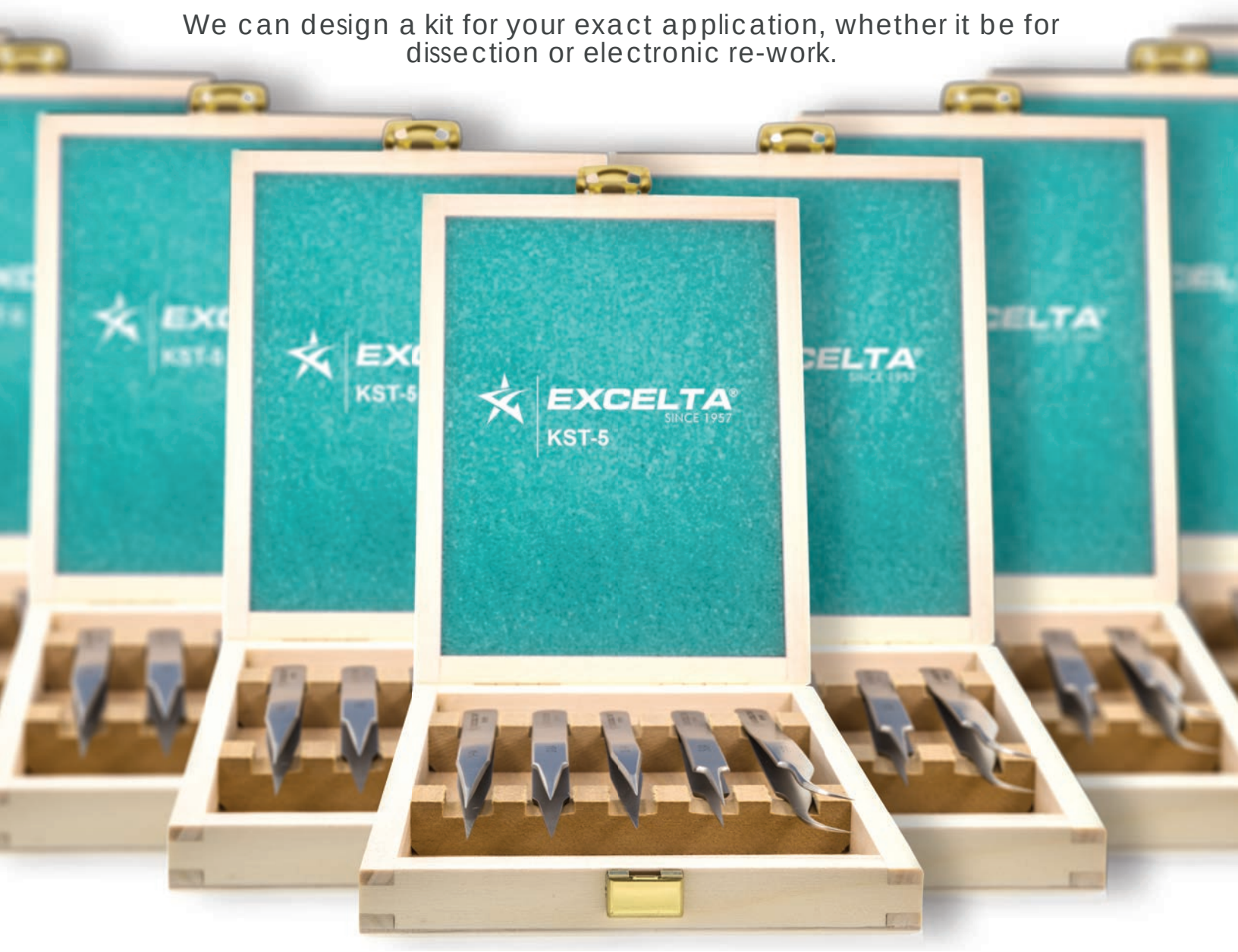

KITSETS

TWEEZERS

KST-5 ★★★

The high precision 5 piece tweezer kitset comes complete with a wooden case. All are made in Switzerland from Neverust® Anti-magnetic Stainless Steel.

Part #	Description	Length
1-SA	Slender Fine Points	4.50" (115mm)
2-SA	Tapered Medium Points	4.75" (120mm)
3C-SA	Very Fine Precision Points	4.25" (110mm)
5-SA	Tapered High Precision Points	4.25" (110mm)
7-SA	Curved High Precision Points	4.25" (110mm)

KST-5-SE ★

The general precision 5 piece tweezer kitset comes complete with a wooden case. All are made of Anti-magnetic Stainless Steel.

Part #	Description	Length
1-SA-SE	Slender Fine Points	4.50" (115mm)
2-SA-SE	Tapered Medium Points	4.75" (120mm)
3C-SA-SE	Very Fine Precision Points	4.25" (110mm)
5-SA-SE	Tapered High Precision Points	4.25" (110mm)
7-SA-SE	Curved High Precision Points	4.25" (110mm)

KST-10 ★★★

The high precision 10 piece tweezer kitset comes complete with a wooden case. All are made in Switzerland from Neverust® Anti-magnetic Stainless Steel.

Part #	Description	Length
AA-SA	Straight Medium Points	5.00" (127mm)
00-SA	Strong Precision Points	4.25" (110mm)
00D-SA	Serrated Precision Points	4.75" (120mm)
1-SA	Slender Fine Points	4.50" (115mm)
2-SA	Tapered Medium Points	4.75" (120mm)
2A-SA	Tapered Flat Round Points	4.75" (120mm)
3C-SA	Very Fine Precision Points	4.25" (110mm)
5-SA	Tapered High Precision Points	4.25" (110mm)
5A-SA	Offset High Precision Points	4.50" (115mm)
7-SA	Curved High Precision Points	4.25" (110mm)

KST-10-SE ★

The general precision 10 piece tweezer kitset comes complete with a wooden case. All are made of Anti-magnetic Stainless Steel.

Part #	Description	Length
AA-SA-SE	Straight Medium Points	5.00" (127mm)
00-SA-SE	Strong Precision Points	4.25" (110mm)
00D-SA-SE	Serrated Precision Points	4.75" (120mm)
1-SA-SE	Slender Fine Points	4.50" (115mm)
2-SA-SE	Tapered Medium Points	4.75" (120mm)
2A-SA-SE	Tapered Flat Round Points	4.75" (120mm)
3C-SA-SE	Very Fine Precision Points	4.25" (110mm)
5-SA-SE	Tapered High Precision Points	4.25" (110mm)
5A-SA-SE	Offset High Precision Points	4.50" (115mm)
7-SA-SE	Curved High Precision Points	4.25" (110mm)

TW-700

This kitset comes complete in a nylon pouch. All are made of Anti-magnetic Stainless Steel.

Part #	Description	Length
0C-SA-PI	Straight Fine Points	4.50" (115mm)
1-SA-PI	Very Fine Points	4.75" (120mm)
AA-SA-PI	Medium Points	4.25" (110mm)
20-SA-PI	Medium Serrated Points	4.25" (110mm)
24-SA-PI	Angled Medium Serrated Points	4.25" (110mm)
SS-SA-PI	Long Fine Points	5.50" (137mm)

TW-900

This kitset comes complete in a nylon pouch. All are made of Anti-magnetic Stainless Steel.

Part #	Description	Length
00-SA-PI	Medium Points	4.50" (115mm)
2A-SA-PI	Strong Flat Round Points	4.75" (120mm)
3-SA-PI	Very Fine Points	4.75" (120mm)
7-SA-PI	Curved Very Fine Points	4.50" (115mm)
5-SA-PI	Very Fine Points	4.25" (110mm)
AA-SA-PI	Medium Points	5.00" (127mm)

KST-DIS-1

This kit comes complete with a zippered black vinyl case.

Part #	Description	Length
RU-1	Plastic ruler	6.00" (150.00mm)
DR-1	Glass dropper with rubber bulb	4.75" (120.00mm)
292	Scissors - Stainless Steel - Blade 1.5"(37.5mm)	4.50" (112.50mm)
20A-1-SE	Forceps with guide pin and serrated handles	4.50" (112.50mm)
333	Teasing needle with plastic handle	5.75" (143.75mm)
333F	45° Angulated teasing needle with plastic handle	6.00" (150.00mm)

KST-DIS-2

The KST-DIS-2 comes complete with a zippered black vinyl case.

Part #	Description	Length
RU-1	Plastic ruler	6.00" (150.00mm)
181-SE	#3 scalpel handle	5.00" (125.00mm)
181-10	10 pieces #10 scalpel blades	
181A-SE	#4 scalpel handle	5.50" (137.50mm)
181-22	10 pieces #22 scalpel blades	
179A	One piece straight scalpel with blade	6.50" (162.50mm)
333B	Straight Probe - Stainless Steel	5.00" (125.00mm)
333C	55° Angled Probe - Stainless Steel	4.87" (121.88mm)
333D	45° Angled Probe - Stainless Steel	6.00" (150.00mm)
333E	Straight Paddle Tip w/Eye Hole - Stainless Steel	6.00" (150.00mm)
F-7-SE	Straight Dressing Forceps	4.25" (110.00mm)
F-6-SE	Straight Tissue Forceps - 1 X 2 teeth	4.50" (115.00mm)
36A-SE	25° Curved Clamp - Stainless Steel - Serrated	5.50" (137.50mm)
277A	Dressing Scissors - Stainless Steel - 1.5"(37.5mm) Blade Length	5.50" (137.50mm)
274A	Dissection Scissors - Stainless Steel - 1.5"(37.5mm) Blade Length	4.62" (115.50mm)

LAB SPECIFIC TOOLS

LAB SPECIFIC FORCEPS

The forceps shown in this section are just a few of many used in schools and industry labs around the world. We offer over 200 styles of forceps in up to 17 different materials. Let us know your specific application and our sales department can direct you to the correct tool for your application, or design a pair of forceps to your exact application.

LAB SPECIFIC

DISSECTION FORCEPS

Lab tools are made specifically for laboratory use. All feature serrated tips and grips for more control and all are cleanroom safe. They can be autoclaved.

DISSECTING - ADSON — Length 4.75"(119mm)

Part#	Material	Quality	Critical Tip Measurement (CTM)	
AF-1-SE	Stainless Steel	★	.030" X .050"	.75mm X 1.25mm

DISSECTING - ADSON — Length 4.75"(119mm)

Part#	Material	Quality	Critical Tip Measurement (CTM)	
10H-S-SE	Stainless Steel	★	.02" X .384"	5mm X 9.6mm

DISSECTING - ADSON — Length 4.75"(119mm)

Part#	Material	Quality	Critical Tip Measurement (CTM)	
10G-SA	Anti-Mag. Neverust®	★★★	.023" X .023"	.58mm X .58mm

DISSECTING - ADSON — Length 4.87" (122mm)

Part#	Material	Quality	Critical Tip Measurement (CTM)	
F-5-SE	Stainless Steel	★	.02" X .035"	.5mm X .88mm

These forceps are ideal for handling soft tissue. Both handles as well as the points are serrated for better gripping. They are all made of surgical stainless steel and can be autoclaved.

SOFT TISSUE HANDLING **With Guide Pin** **Length 4.25” (106mm)**

Part#	Material	Quality	Critical Tip Measurement (CTM)	
F-7-SE	Stainless Steel	★★	.02" X .03"	.5mm X .75mm

SOFT TISSUE HANDLING **Length 4.5” (113mm)**

Part#	Material	Quality
20A-1-SE	Stainless Steel	★

SOFT TISSUE HANDLING **Length 4.5” (113mm)**

Part#	Material	Quality	Critical Tip Measurement (CTM)	
23B-S-SE	Stainless Steel	★	.12" X .06"	3mm X 1.5mm

SOFT TISSUE HANDLING **Length 4.75” (144mm)**

Part#	Material	Quality	Critical Tip Measurement (CTM)	
23D-S-SE	Stainless Steel	★	.12" X .06"	3mm X 1.5mm

LAB SPECIFIC

ADSON TISSUE FORCEPS

These forceps are ideal for handling soft tissue. The handles are serrated for better gripping. The 1 X 2 teeth configuration allows for complete gripping of soft tissue. They are all made of surgical stainless steel and can be autoclaved.

SMALL SOFT TISSUE HANDLING — Length 4.75"(119mm)

Part#	Material	Quality	Critical Tip Measurement (CTM)	
AF-2-SE	Stainless Steel	★	.065" X .071"	1.63mm X 1.78mm

MEDIUM SOFT TISSUE HANDLING — Length 4.75"(119mm)

Part#	Material	Quality	Critical Tip Measurement (CTM)	
AF-3-SE	Stainless Steel	★	.083" X .074"	2.08mm X 1.85mm

MEDIUM SOFT TISSUE HANDLING — Length 4.75"(119mm)

Part#	Material	Quality	Critical Tip Measurement (CTM)	
AF-4-SE	Stainless Steel	★	.063" X .084"	1.58mm X 2.10mm

LARGE SOFT TISSUE HANDLING — Length 4.5" (113mm)

Part#	Material	Quality	Critical Tip Measurement (CTM)	
F-6-SE	Stainless Steel	★★	.098" X .128"	2.45mm X 3.2mm

LAB SPECIFIC
DRESSING FORCEPS

These curved/bent forceps are perfect for dressings. The curved/bent points allow for excellent visibility. Serrations assure positive gripping and are made of surgical stainless steel and can be autoclaved.

45° Curved With Serrated Tips & Guide Pin — Length 4" (100mm)

Part#	Material	Quality	Critical Tip Measurement (CTM)	
24-4-SE	Stainless Steel	★	.02" X .030"	.5mm X .75mm

90° Bent With Smooth Tips & Guide Pin — Length 4" (100mm)

Part#	Material	Quality	Critical Tip Measurement (CTM)	
F-2-SE	Stainless Steel	★	.02" X .030"	.5mm X .75mm

90° Bent With Serrated Tips — Length 3.5" (88mm)

Part#	Material	Quality	Critical Tip Measurement (CTM)	
F-3-SE	Stainless Steel	★	.025" X .030"	.63mm X .75mm

45° Curved With Serrated Tips — Length 3.75" (94mm)

Part#	Material	Quality	Critical Tip Measurement (CTM)	
F-4-SE	Stainless Steel	★	.015" X .025"	.38mm X .63mm

RONGEURS

LABORATORY BONE CUTTERS

These 'scoop' end Rongeurs are used to remove small pieces of bone and tissue. They are made of AISI 440 stainless steel and include serrated handles.

Scooped Shaped Tips - .03"

Length 5.75"(144mm)

Part #	Tip Angle
R-275-S	Straight
R-275-C	20°

NEW ITEM

Scooped Shaped Tips - .20"

Length 5.75"(144mm)

Part #	Tip Angle
R-277-S	Straight
R-277-C	20°

NEW ITEM

SCISSORS | TUNGSTEN CARBIDE BLADES

STAINLESS STEEL | ★★★★ EXTREME PRECISION

These extremely precise stainless steel scissors are ideal for delicate applications. They feature Tungsten Carbide blades which have two times the tensile strength of stainless steel and double the density, producing long life. Acid-proof, sterilizable and rust proof.

Miniature Self-Opening Scissors For Confined Areas

Part #	Shape	Length	Blade Length
346-6-HT	Straight	5.50" (137mm)	.63" (15.90mm)
347-6-HT	Curved	6.00" (150mm)	.56" (14.23mm)

Short Thin Blade - Tight Intricate Work

Part #	Shape	Length	Blade Length
279-HT	Straight	3.50" (88mm)	.8" (20mm)

Medium Thin Blade - Intricate Work

Part #	Shape	Length	Blade Length
271-HT	Straight	4.50" (113mm)	1.17" (29.70mm)
270-HT	60°	4.50" (113mm)	1.27" (32.38mm)

Extra Long Blades - Round Blunt Tips For Safety

Part #	Shape	Length	Blade Length
371A	Straight	6.00" (150mm)	2" (50mm)
371B	20°	6.00" (150mm)	2" (50mm)

These extremely precise stainless steel scissors are ideal for delicate applications. They are acid resistant, rust proof and autoclavable.

Extra Fine Blade Relieved Tip

Part #	Shape	Length	Blade Length
361	17°	3.25" (81mm)	1" (25mm)
361S	Straight	3.25" (81mm)	1" (25mm)

Fine Blade Relieved Tip

Part #	Shape	Length	Blade Length
362	17°	3.13" (78mm)	.88" (22mm)
362S	Straight	3.13" (78mm)	.88" (22mm)

Round Blade

Part #	Shape	Length	Blade Length
363	17°	3.75" (94mm)	1.25" (31mm)

Fine Blade

Part #	Shape	Length	Blade Length
364	17°	3.75" (94mm)	1.25" (31mm)

Fine Thin Blade

Part #	Shape	Length	Blade Length
365	10°	4" (100mm)	1.09" (27mm)

SCISSORS | DELICATE APPLICATIONS

STAINLESS STEEL | ★★★ HIGH PRECISION

These extremely precise stainless steel scissors are ideal for delicate applications. The sleek, twisted frame gives them a professional and unique look. They are acid proof and autoclavable.

Extra Fine Blade Relieved Tip

Part#	Blade Length	Style	Length
355	.88" (22mm)	Angled	4" (100mm)

Angled and tapered sharp pointed blades for confined areas.

Fine Blade Relieved Tip

Part#	Blade Length	Style	Length
354	.88" (22mm)	Angled	3.75" (94mm)

Angled sharp pointed blades for those hard to get to cutting applications.

Fine Blade

Part#	Blade Length	Style	Length
357	1.11" (28mm)	Straight	3.85" (96mm)

Extremely precise for delicate applications

Curved Flat Blade

Part#	Blade Length	Style	Length
356	.88" (22mm)	Angled	4" (100mm)

Thick angled sharp pointed blades for more difficult, strong cuts.

Extra Fine Blade Relieved Tip

Part#	Blade Length	Style	Length
358	1.79" (45mm)	Straight	5.35" (134mm)

Sharp tips are designed for a variety of applications.

These extremely precise stainless steel scissors are ideal for delicate applications. The sleek, twisted frame gives them a professional and unique look. They are acid proof and autoclavable.

Round Fine Blade

Part#	Blade Length	Style	Length
351	1.13" (28.25mm)	Straight	3.75" (95mm)

Blunt tips are designed to be compatible with latest safety standards

Fine Blade

Part#	Blade Length	Style	Length
352	1.08" (27mm)	Straight	3.85" (96mm)

Blunt tips are designed to be compatible with latest safety standards

Fine Blade

Part#	Blade Length	Style	Length
353	1.9" (47.5mm)	Straight	6" (150mm)

Blunt tips are designed to be compatible with latest safety standards

Fine Blade Relieved Tip

Part#	Blade Length	Style	Length
359	2.4" (60mm)	Straight	6.5" (163mm)

Sharp tips are designed for a variety of applications.

SCISSORS | STAINLESS STEEL

★★ FINE PRECISION

These precision miniature scissors are ideal for delicate operations in a confined area. They are made of stainless steel and can be autoclaved.

Miniature Cutting

Part #	Shape	Length	Blade Length
346	Straight	4.50" (113mm)	.63" (016mm)
346A	Straight	3.75" (094mm)	.50" (013mm)
346B	Straight	3.50" (088mm)	.38" (010mm)
366	Straight	3.00" (075mm)	.19" (005mm)
349	45°	4.50" (113mm)	.63" (016mm)
349A	45°	3.75" (094mm)	.50" (013mm)
349B	45°	3.50" (088mm)	.38" (010mm)
367	45°	3.00" (075mm)	.19" (005mm)
368	56°	2.00" (050mm)	.25" (006mm)

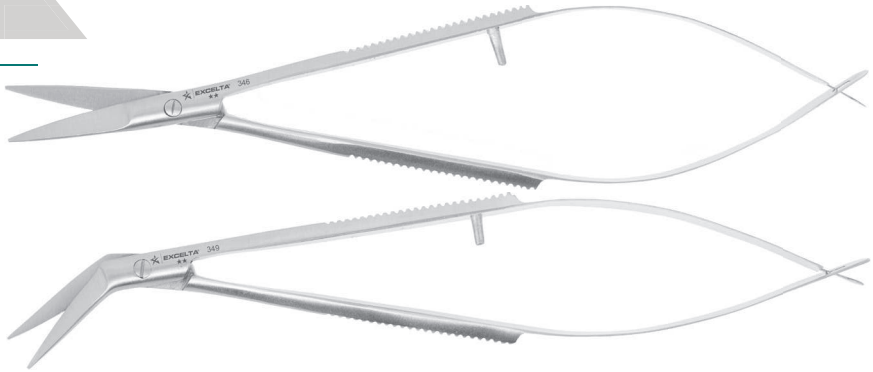

Miniature Cutting - Blunt Safety Tips

Part #	Shape	Length	Blade Length
348	Straight	5.00" (125mm)	.40" (10mm)

NEW ITEM

Extra Fine Blade Relieved Tip

Part #	Shape	Length	Blade Length
289	17°	3.25" (81mm)	.75" (19mm)
288	Straight	3.25" (81mm)	.75" (19mm)

These stainless steel scissors are acid resistant, rust proof and autoclavable.

Very Fine Blade - Angled For Accessibility

Part #	Shape	Length	Blade Length
270	60°	4.25" (110mm)	1.25" (31mm)
270EC*	60°	4.25" (110mm)	1.25" (31mm)

*EC-Epoxy Coated Grips

Serrated Outside Edges

Part #	Shape	Length	Blade Length
299	Straight	5.00" (125mm)	1.75" (44mm)
299EC*	Straight	5.00" (125mm)	1.75" (44mm)

*EC-Epoxy Coated Grips

SCISSORS | STAINLESS STEEL

★★ FINE PRECISION

These stainless steel scissors are acid resistant, rust proof and autoclavable.

Fine Blade

Part #	Shape	Length	Blade Length
298B	Straight	5.00" (125mm)	2.00" (50mm)
298B-EC*	Straight	5.00" (125mm)	2.00" (50mm)
298AB	Curved	4.63" (115mm)	1.87" (47mm)
298A	Straight	4.50" (113mm)	1.75" (44mm)
298	Straight	4.00" (100mm)	1.50" (38mm)
298EC*	Straight	4.00" (100mm)	1.50" (38mm)
297	Straight	3.50" (88mm)	1.25" (31mm)
295	Straight	4.11" (103mm)	1.13" (29mm)

***EC-Epoxy Coated Grips**

Very Fine Blade

Part #	Shape	Length	Blade Length
292	Straight	4.5" (113mm)	1.50" (38mm)
290	Straight	3.75" (94mm)	1.00" (25mm)
290EC*	Straight	3.75" (94mm)	1.00" (25mm)
291	20°	3.75" (94mm)	1.00" (25mm)

***EC-Epoxy Coated Grips**

STAINLESS STEEL SCISSORS

★★ FINE PRECISION

These extremely precise surgical stainless steel scissors are ideal for delicate applications. They are acid resistant, rust proof and autoclavable.

Very Fine Blade

Part #	Shape	Length	Blade Length
275	Straight	4.50" (113mm)	1.10" (28mm)
275A	10°	5.00" (125mm)	1.00" (25mm)
271	Straight	4.75" (120mm)	1.25" (31mm)
274A	Straight	4.62" (116mm)	1.50" (38mm)
274	Straight	4.62" (116mm)	1.20" (30mm)
273	Straight	4.56" (114mm)	1.10" (28mm)

Fine Blade - Round Blunt Tips For Safety

Part #	Shape	Length	Blade Length
376	14°	7.00" (175mm)	1.56" (39mm)
277	Straight	4.12" (103mm)	1.25" (31mm)
278	Straight	4.50" (113mm)	1.25" (31mm)

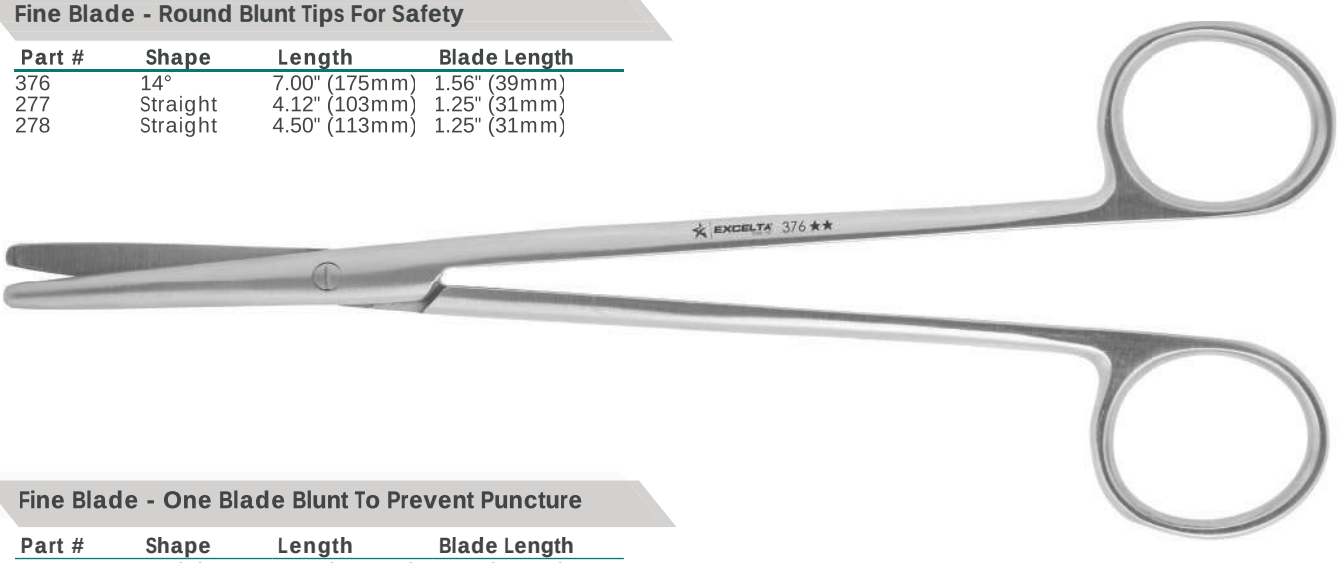

Fine Blade - One Blade Blunt To Prevent Puncture

Part #	Shape	Length	Blade Length
276	Straight	5.56" (139mm)	1.25" (31mm)
277A	Straight	5.50" (138mm)	1.50" (38mm)
272	Straight	4.56" (114mm)	1.50" (38mm)

LARGE SCISSORS

STAINLESS STEEL

★★★ HIGH PRECISION
★★ FINE PRECISION

The following scissors feature robust blades which are ideal for heavy duty cutting. They are made of surgical stainless steel.

Short Round Blades ★★

Part #	Shape	Length	Blade Length
309	Straight	4.00" (100mm)	1.25" (31mm)

Ideal for Pattern Cutting ★★

Part #	Shape	Length	Blade Length
339	Straight	6.00" (150mm)	2.75" (69mm)
340	Straight	7.00" (175mm)	3.25" (81mm)
341	Straight	8.00" (200mm)	4.00" (100mm)

Serrations On One Edge - Great For Cutting Kevlar ★★★

Part #	Shape	Length	Blade Length
299P	Straight	5.50" (138mm)	1.75" (44mm)

Precision hemostats come with or without vinyl-coated handles. Those without vinyl may be autoclaved. They are made of stainless steel and feature a locking mechanism.

35-SE **Length 5” (125mm)**

Locking hemostat with straight serrated jaws, cleanroom safe.
Also available in non-serrated 35-A-SE.

35PH **Length 5” (125mm)**

Locking hemostat with straight serrated jaws and vinyl-coated handles.

36-SE **Length 5” (125mm)**

Locking hemostat with 25° curved serrated jaws, cleanroom safe.

36PH **Length 5” (125mm)**

Locking hemostat with 25° curved serrated jaws and vinyl-coated handles.

37-SE **Length 6” (150mm)**

Locking hemostat with straight serrated jaws, cleanroom safe.

37PH **Length 6” (150mm)**

Locking hemostat with straight serrated jaws and vinyl-coated handles.

HEMOSTATS | STAINLESS STEEL

★★ FINE PRECISION

38-SE **Length 6” (150mm)**

Locking hemostat with 30° curved serrated jaws and cleanroom safe.

38PH **Length 6” (150mm)**

Locking hemostat with 30° curved serrated jaws has vinyl-coated handles.

39-SE **Length 8” (200mm)**

Locking hemostat with straight serrated jaws and cleanroom safe.

39PH **Length 8” (200mm)**

Locking hemostat with straight serrated jaws has vinyl-coated handles.

40-SE **Length 8” (200mm)**

Locking hemostat with 30° curved serrated jaws and cleanroom safe.

40PH **Length 8” (200mm)**

Locking hemostat with 30° curved serrated jaws has vinyl-coated handles.

MOSQUITO CLAMPS
NEEDLE HOLDERS

Mosquito clamps are used to clamp small blood vessels. They are made of autoclavable surgical stainless steel and feature a locking mechanism.

Mosquito Clamp — Length 5” (127mm)

Part#	Jaws	Style
31-SE	Serrated	30° Curved

Mosquito Clamp — Length 5” (127mm)

Part#	Jaws	Style
33-SE	Smooth	Straight
33A-SE	Serrated	Straight

Mosquito Clamp — Length 5” (127mm)

Part#	Jaws	Style
36A-SE	Serrated	30° Curved

Webster needle holders are used to securely hold needles for sewing tissue. They are made of autoclavable surgical stainless steel and feature a locking mechanism.

Webster Needle Holder — Length 5” (127mm)

Part#	Jaws	Style
NH-35-SE	Smooth	Straight

Webster Needle Holder — Length 6” (150mm)

Part#	Jaws	Style
NH-38-SE	Smooth	Straight

Instrument Cleaning Brushes

Designed for general cleaning in tight areas. The handle is .25"(6.25mm) in diameter. Fibers are mechanically clamped into the stainless steel tube and inserted in the Acetal handle. Available with straight or bent tips.

210S-N *210B-H 210S-S *210B-S

Part #	Shape	Length	Blade Length
*210B-H	Bent 50°	Horse Hair	5.50" (138mm)
210B-N	Bent 50°	Nylon	5.50" (138mm)
210B-P	Bent 50°	Hog Hair	5.50" (138mm)
210B-S	Bent 50°	Stainless Steel	5.50" (138mm)
*210S-H	Straight	Horse Hair	5.75" (144mm)
210S-N	Straight	Nylon	5.75" (144mm)
210S-P	Straight	Hog Hair	5.75" (144mm)
210S-S	Straight	Stainless Steel	5.75" (144mm)

Heat Resistant Brushes

The nylon fibers are epoxy set into the Acetal handles with a high temperature adhesive to resist deterioration in an autoclave. The soft non-shedding nylon fibers are perfect for working on delicate parts. Brushes should be cleaned prior to cleanroom use.

211A-N 211B-N 211C-N 211D-N

Part #	Shape	Length	Blade Length
211A-N	Straight	Nylon	4.50" (115mm)
211B-N	Straight	Nylon	4.50" (115mm)
211C-N	Straight	Nylon	4.50" (115mm)
211D-N	Straight	Nylon	4.50" (115mm)

Materials

Hog Hair: Strong and stiff with natural taper and split end. Water resistant and heat tolerant to 500°F.

***Horse Hair:** Soft and slightly stiff. Used for scratch-free dry brushing. Heat resistant to 370°F. ESD Safe (10^8-10^{11} ohms/sq)

Nylon: Resilient and durable. Impervious to solvents and common chemicals. Resistant to bacteria and heat resistance to 250°F.

Stainless Steel: Resistant to heat, rust and corrosion. Used for wet or dry applications.

ESD Safe Brushes (10^8-10^{11} ohms/sq)

Made with stainless steel handles and horse hair bristles to provide ESD protection. The bristles are mechanically clamped into the handle for maximum fiber retention without the use of adhesives which could contaminate the work area. Soft and slightly stiff, heat resistant to 370°F.

212A-H 212B-H 212C-H 212D-H

Part#	Bristles	Length
212A-H	Horse Hair	3.5" (88mm)
212B-H	Horse Hair	4.75" (120mm)
212C-H	Horse Hair	4.75" (120mm)
212D-H	Horse Hair	6" (150mm)

Cleanroom Safe Brushes (10^8 ohms/sq)

Designed for general cleaning in tight areas. Bristles are mechanically clamped into the handle for maximum fiber retention without the use of adhesives which could contaminate the work area. New Stratigo9 fibers are similar to nylon fibers, except they are Static Dissipative.

213A-N 213B-N 213C-N 213D-N

Part#	Bristles	Length
213A-N	Stratigo9	3.5" (88mm)
213B-N	Stratigo9	4.75" (120mm)
213C-N	Stratigo9	4.75" (120mm)
213D-N	Stratigo9	6" (150mm)

Materials

Horse Hair: Soft and slightly stiff. Used for scratch-free dry brushing. Heat resistant to 370°F. ESD Safe (10^8-10^{11} ohms/sq)

Stratigo9: A static dissipative acetal which is as durable as nylon, thick enough to perform mechanical work and does not shed or slough and is cleanroom compatible.

Fiberglass Cleaning Brush

Part#	Length	Diameter
264	5.25" (131mm)	.05" (1.25mm)

Fiberglass refillable cleaning brush has a long thin handle. It is ideal for use in very confined areas, which are not accessible with larger diameter brushes. Refill **264A**

Brush Kit

Part#	Length	Diameter
262	4.25" (106mm)	.13" (3mm)

This kit includes one handle and four replaceable brushes (**265A**, **266A**, **267A**, **268A**).

Fiberclass Scratch Brush

Part#	Length	Diameter
263	4.25" (106mm)	.63"(15.75mm)

Fiberglass retractable and refillable scratch brush with plastic handle. Very useful when cleaning and polishing. Refill - **263A**

Nylon Bench Brush

Part#	Length	Width
186	8.5" (213mm)	.5" (13mm)

Bench brush with wooden handle has four rows of white nylon bristles 3.75"(93.75mm) long. The bristles will not shed.

Scratch Brushes

Part#	Material	Length	Diameter	Refill
265	Brass	4.75" (120mm)	.13" (3mm)	265A
266	Steel	4.75" (120mm)	.13" (3mm)	266A
267	Fiberglass	4.75" (120mm)	.13" (3mm)	267A
268	Nylon	4.75" (120mm)	.13" (3mm)	268A

Retractable and refillable scratch brushes have a plastic handle. They can be used for fine de-burring, polishing, rust removal, or cleaning and erasing the chemical etching processes. They are excellent for pre-solder and contact cleaning.

Bench Brushes - ESD Safe (10^8-10^{11}) ohms/sq

Part#	Length	Width	Firmness
187	10" (250mm)	.5" (13mm)	Soft
189	10" (250mm)	.5" (13mm)	Half Soft
190	10" (250mm)	.5" (13mm)	Half Hard

Soft bench brush is made of high grade bristles with a wooden handle. There are four rows of bristles 4.5"(112.5mm) long. They will not shed.

Applicator Brush - ESD Safe (10^8-10^{11}) ohms/sq

Part#	Length	Diameter
214-H	4.5" (115mm)	.188" (5mm)

Double-ended applicator brush has a short flat end and an extra stiff chiseled end. The bristles are soft horse hair.

Applicator Brush - ESD Safe (10^8-10^{11}) ohms/sq

Part#	Length	Diameter
215-H	4.5" (115mm)	.375" (9mm)

Double-ended applicator brush has a short flat end and an extra stiff chiseled end. The bristles are soft horse hair.

ESD Safe - Surface Resistivity 10^8-10^{10} ohms/sq

Soft Cleaning Brush

Part#	Length	Height	Width
194-ESD	6" (150mm)	.019" (.48mm)	.5" (13mm)

Two rows of soft bristles. Round plastic handle.

Soft Cleaning Brush

Part#	Length	Height	Width
196-ESD	5.75"(144mm)	.13" (3mm)	1.5" (38mm)

One row of soft bristles. Flat platic handle.

Toothbrush Style Brush

Part#	Length	Height	Width
197-ESD	6.76"(170mm)	.38" (9.5mm)	1.25" (31mm)

Three rows of medium stiff bristles. Square plastic handle with finger grooves.

#3 Stainless Steel Scalpel Blades ★★

177-10 - Large Curved
177-11 - 10° Triangular
177-11-R - Relieved 10° Triangular
177-12 - Crescent
177-13 - Small Curved
177-15 - Fine

177-10 177-11 177-12 177-13 177-15

#3 Stainless Steel Scalpel Handles

177 ★★★
177-SE ★★

#3 Stainless Steel Scalpel Blade

181-10 ★★

#3 Stainless Steel Scalpel Handle

181-SE ★★

#4 Stainless Steel Scalpel Blade ★★

181-22 ★★

#4 Stainless Steel Scalpel Handle ★★

181A-SE ★★

SCALPELS
RAZOR BLADES

Scalpel Handles / Disposable Scalpels ★★★

Part#	Description	Length
178-11-S	Disposable Sterile Scalpel	5.75" (144mm)
175-11	Disposable Scalpel	3.25" (81mm)

Scalpel Accessories

174	★	Stainless Steel Blade Holder/Breaker
177A	★★★	Scalpel Blade Remover

Carbon Steel Razor Blades ★★★

176-1	176-2	176-3	176-4
.009" Single Edge	.009" Single Edge	.009" Single Edge	.009" Single Edge
2 facet	2 facet	2 facet	3 facet
Wrapped	Unwrapped	Unwrapped & Washed	Wrapped

MINIATURE OILERS | SMALL HAND TOOLS

★★★ HIGH PRECISION

Ideal for placing very small amounts of epoxies or lubricants into tight places.

Miniature Spatulas ★★★ Plastic Handle — Length 2.5” (62mm)

Part#	Tip Size	Color	
260AA	.005" (.13mm)	Teal	
260A	.010" (.25mm)	Black	
260A-R	.010" (.25mm)	Black	Radius tip
260B	.015" (.38mm)	Blue	
260C	.020" (.50mm)	Green	
260D	.030" (.75mm)	Red	
260D-R	.030" (.75mm)	Red	Radius tip

Miniature Spatulas ★★★ Aluminum Handle — Length 2.5”(62mm)

Part#	Tip Size	Color
260A-ESD	.010" (.25mm)	Black
260B-ESD	.015" (.38mm)	Blue
260C-ESD	.020" (.50mm)	Green
260D-ESD	.030" (.75mm)	Red
260E-ESD	.010" (.25mm)	Gold

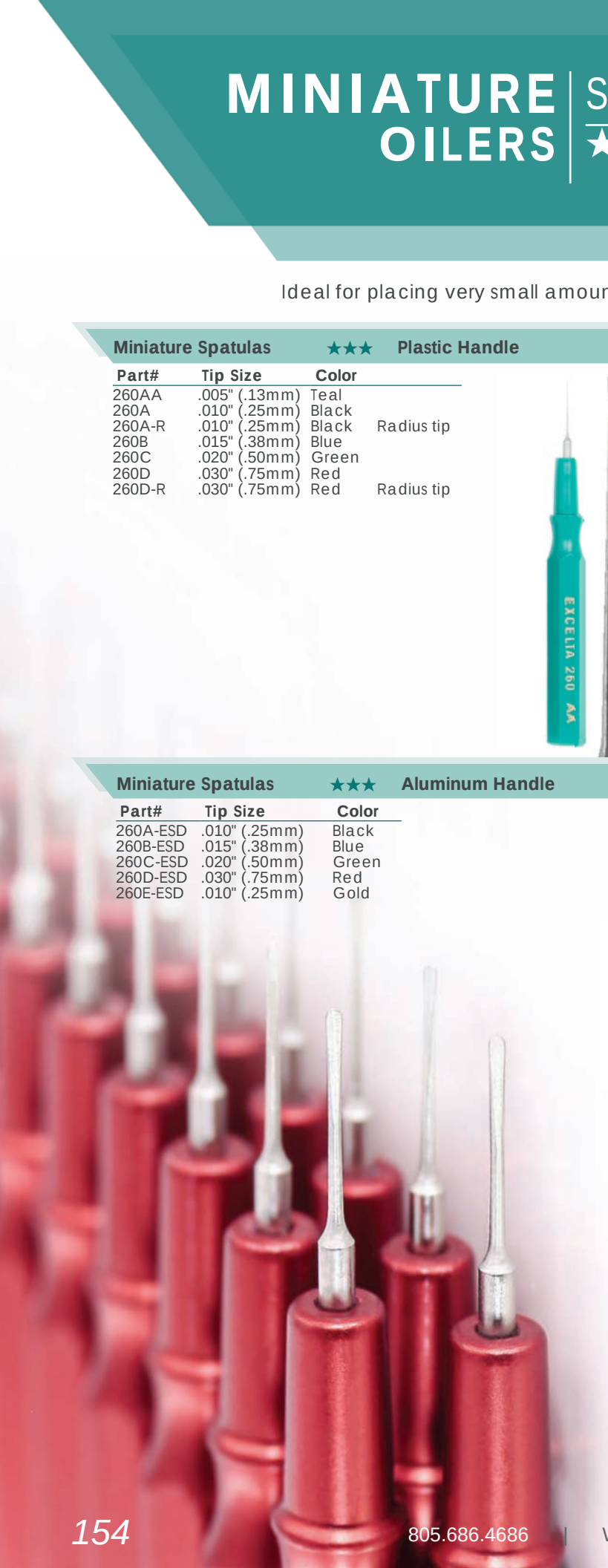

MINIATURE OILERS

Miniature Spatulas ★★★ Ergonomic Foam Grip Length 3” (75mm)

Part#	Tip Size	Color
260A-ET	.010" (.25mm)	Black
260B-ET	.015" (.38mm)	Blue
260C-ET	.020" (.50mm)	Green
260D-ET	.030" (.75mm)	Red

260H ★★ Extension Handle Length 2.75” (69mm)

Extension handle for the 260 series mini-spatulas are made of polished stainless steel. Reduces hand fatigue and provides increased control for delicate application.

320-DP ★★ Dotting Pen Set Length 2.75” (69mm)

The 320-DP deluxe Dotting Pen Set is stainless steel with a double-sided handle and includes 1 tapered tip, 1 spear tip and 8 different diameter ball tips. Ball Dia. .041”, .062”, .070”, .085”, .1”, .110”, .120”.86” (.86” is 30° Angled. Others are straight)

NEW ITEM

SPATULAS
MIRRORS

Spatulas ★★

Part#	Description	Length
342	Double Ended Spatula	7" (175mm)
343	Double Ended Spatula	7" (175mm)
345	Wooden Handle Spatula	8" (200mm)

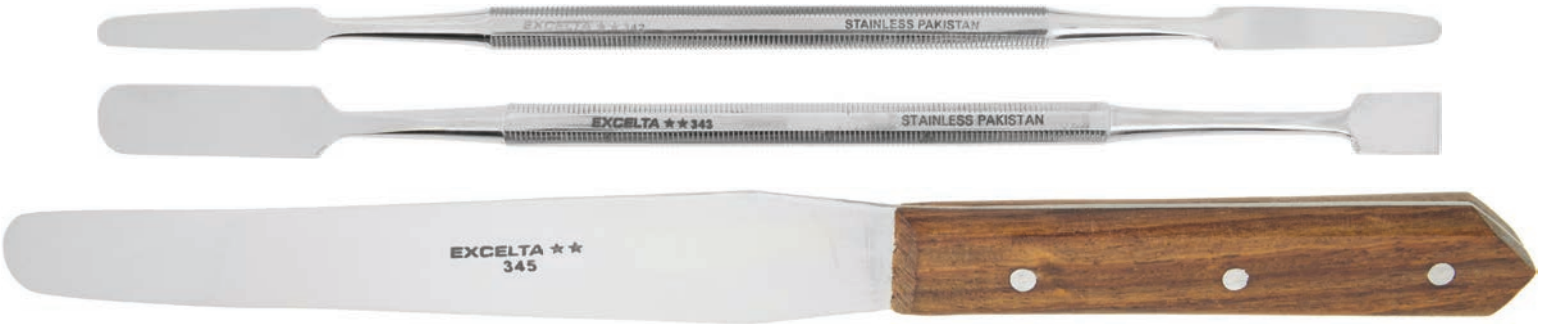

Inspection Mirrors ★★★ ESD Safe

Part#	Shape	Length	Head Size
415	Round	8.0" (200mm)	1.25" (31mm) dia.
416	Oval	8.5" (213mm)	1.00" (25mm) X 2" (50mm)
417	Round	7.5" (188mm)	0.88" (22mm) dia.

SMALL PIN VISES

These small pin vises provide a 'handle' for probes, drill bits or any other small cylindrical items.

Double Ended Pin Vise - Stainless Steel

Part#	Length	Chuck Opening	Surface Resistivity
220	4.5" (115mm)	.035"-.115" (.88mm-2.8mm)	Conductive

Brass Handle Pin Vise

Part#	Length	Chuck Opening	Surface Resistivity
227A	3.5" (90mm)	0 - .015" (.38mm)	Conductive
227B	4" (100mm)	0 - .025" (.63mm)	Conductive

Ergonomic Pin Vise

Part#	Length	Chuck Opening	Surface Resistivity
227A-ET	4" (100mm)	0 - .015" (.38mm)	10^{10} ohms/sq
227B-ET	4.5" (115mm)	0 - .025" (.63mm)	10^{10} ohms/sq

Ergonomic Pin Vise with .010"(.75mm) Probe

Part#	Length	Chuck Opening	Surface Resistivity
227C-ET	4" (100mm)	0 - .015" (.38mm)	10^{10} ohms/sq
227D-ET	4.5" (115mm)	0 - .025" (.63mm)	10^{10} ohms/sq
227C-P	Replacement Probe		

PROBES AND SCRIBES | SMALL HAND TOOLS

★★★ HIGH PRECISION

Stainless steel probes and scribes are cleanroom safe and autoclaveable.

Micro Tip Probes — Length 6.5" (163mm)

Part #	Tip Size	Style
332A	.001" (.025mm)	Straight
332B	.001" (.025mm)	45° Angled
332C	.001" (.025mm)	25° Angled
332D	.001" (.025mm)	90° Angled
332E	.001" (.025mm)	Hooked

Short Fine Tip Probes — Length 3" (75mm)

Part #	Tip Size	Style
331A	.001" (.025mm)	Straight
331B	.001" (.025mm)	90° Angled
331C	.001" (.025mm)	35° Curved
331D	.001" (.025mm)	.5"(12.5mm) Radius Hook

Short Micro Tip Probes — Length 4.75"(119mm)

Part #	Tip Size	Style
335A	.001" (.025mm)	Straight
335B	.001" (.025mm)	90° Angled

Diamond Tip Scribes — Length 4.5" (115mm)

Part #	Tip Size	Style
475A	.02" (.5mm)	Straight
475B	.02" (.5mm)	20° Angled

Fine Tip Probes — Length 6" (150mm)

Part #	Tip Size	Style
330A	.01" (.25mm)	Straight
330B	.01" (.25mm)	90° Angled
330C	.01" (.25mm)	35° Curved
330D	.01" (.25mm)	.5"(12.5mm) Radius Hook
330E	.03" (.75mm)	45° Angled
333A	N/A	Knife
330K	Kit	Includes 330A,330B,330C,330D,330E

Double Ended Scribes/Probes

Part #	Tip Size	Style	Length
477	.015" (.38mm)	Straight/90°	8.5" (213mm)
478	.015" (.38mm)	Straight/Hook	7.5" (188mm)
344C	.01" (.25mm)	Angled/90°	5.5" (137mm)
344D	.01" (.25mm)	Curved/45°	5.5" (137mm)
344	.01" (.25mm)	Kit - 11 pieces	5.5" (137mm)

While the stainless steel probes below are specifically designed for labs, they also fit a variety of applications.

Knurled Handle Probe ★★ Length 5" (150mm)

Part#	Tip Size	Style
333B	.02" (.5mm)	Straight

Knurled Handle Probe ★★ Length 4.875" (122mm)

Part#	Tip Size	Style
333C	.02" (.5mm)	55°

Stainless Steel Handle Probe ★★ Length 6" (150mm)

Part#	Tip Size	Style
333D	.055"(1.38mm)	45°

Plastic Handle Probe ★★ Length 6" (150mm)

Part#	Tip Size	Style
333	.001"(.025mm)	Straight

Plastic Handle Probe ★ Length 5.75" (144mm)

Part#	Tip Size	Style
333F	.025" (.63mm)	45°

Ligature Probe ★ Length 6" (150mm)

Part#	Tip Size	Style
333E	.04"X.4" (1mm X 10mm)	Slot

These are used to explore and gauge the depth of non-visible cavities.
The eye may be used for carrying ligatures.

455A ★★★

The Super Optivisor has a magnifying power of 2.2 and can be used for precise viewing with the added 3.3 power lens. The exclusive clear-view lens has no center post to increase viewing. Shatter-resistant precision and optical lens bring the smallest detail up to a larger and sharper image. Comes with an adjustable headband and can be worn over regular glasses.

401 ★★★

Magna-Lite illuminated Optical Magnifier is a 4X power hand held magnifier. Lens dimension is 1.5"(37.5mm) square. Perfect for quality control and inspection personnel. Comes in a durable impact resistant case. Length 4.75"(120mm)

407 ★★★

Magna-Lite illuminated Optical Magnifier is a 10X power hand held magnifier. Lens dimension is 1.5"(37.5mm) square. Perfect for quality control and inspection personnel. Comes in a durable impact resistant case. Length 4.85"(121.5mm)

405 - 410 - 422 Eye Loupes ★★★★★

Used for magnification in assembly or inspection. Two element optical glass construction. Bright, sharp focus loupes with 360° clear acrylic base to admit light from all directions and a wide range of view.

405
5 Power Eye Loupe

410
10 power Eye Loupe

422
22 power Eye Loupe

PB-1

As a continuity tester, Pocket-Beeper affords the operator quick discernment of point-to-point continuity testing by a clear audible tone. As a transistor and diode tester, the Pocket-Beeper analyzes “in circuit” junctions for go/no go normality.

The Model PB-1 indicates leakage, short or open conditions of transistors. Pocket-Beeper’s portability, combined with its unique self-contained design and rugged enclosure, make it ideal for production and field service applications.

Applications:

- Point-to-point continuity
- Rapid in-circuit scanning of transistors and diodes
- Detects shorts, open and leakage in components
- Positive go/no go testing
- Field servicing and maintenance

Features:

- Automatic power shut-off when not in use
- Audibly indicates conditions
- Low power drain for long battery life
- Will not harm any solid-state device or delicate circuits

Specifications:

- Power (internally supplied) 1.5 VDC “C” dry cell
- Probe signal voltage 1.6 volts peak-to-peak
- Dimensions: 4” high X 1” deep X 2” wide
- Ambient temperature range +10°F to +120°F
- Weight: 12 ounces maximum

Replacement Probes: PB-1L

IntelliTweeze®

TM-500

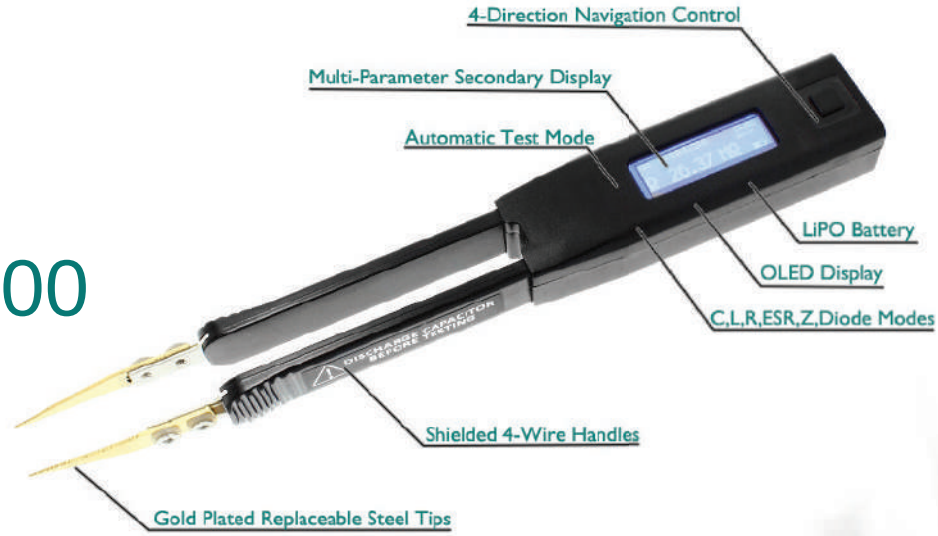

Features

0.2-0.5% base measurement accuracy
Manual C,R,L,Z and ESR modes
Adjustable test signal levels
Diode Polarity/Short Testing
Secondary D,Q and ESR parameters

Physical Specifications

Operating Temperature:	0°C to +50°C
Storage Temperature:	-40°C to +70°C
Relative Humidity:	0% to 90% (0°C to 35°C)
	0% to 70% (35°C to 55°C)
Altitude Operating:	0-2000 meters
Battery Type:	3.7V LIPO rechargeable 150 mA
Typical Charge Time:	2.5 Hours
Electromagnetic Compatibility (EMC):	Susceptibility and Emission: CE8
Size:	14.0 x 2.5 x 3.0 cm (3.94 x 0.9 x 1.
Weight:	53 grams (0.11LB)
Warranty:	1 year

Basic Specifications

Measured Parameters:	L,C,R,ESR,D,Q
Measuring Frequencies:	100 Hz, 120 Hz, 1 kHz, 10 kHz
Measurement Rate:	1 time per second
Resistance:	0.05 Ohms to 9.9 Mohms
Capacitance:	0.5 pF to 4.999 uF
Inductance:	0.5 uH to 999 mH
Dissipation Factor:	0.001 to 1000

Accuracy Specifications

Accuracy is specified at 18°C to 28°C (64°F to 82°F), with relative humidity to 90%

Resistance Accuracy:	0.2% in range 100 R to 10 K, 0.5% in range 1 R to 1 M
Capacitance Accuracy:	0.2% in range 10 nF to 10 uF, 0.5% in range 100 pF to 1mF
Inductance Accuracy:	0.2% in range 10 mH to 100 mH, 0.5% in range 100 uH to 1H

Technical Specifications

AC test mode Test frequency:	1 kHz, 10 kHz, 120 Hz, 100 Hz
Test frequency accuracy:	50 PPM (0.005%)
Test signal level:	0.5/1.0 +/-5% Vrms Sine wave
Source impedance:	100 Ohms +/- 1%

Replacement Tips

Part#	Shape
TM-500-BX	Bent
TM-500-X	Straight
TM-500-PX	Straingt,Fine

Intelligently designed to make locating a faulty component a breeze.

The new IntelliTweeze® features a unique patented mechanical and electronic design which incorporates a built-in direct precision SMD probe designed for component evaluation on the production line, component impedance testing and sorting of SMD components.

VACUUM SYSTEMS

Hi-Performance vacuum systems are ideal for handling wafers, disk media, flat panels, or any item with a flat hard surface.

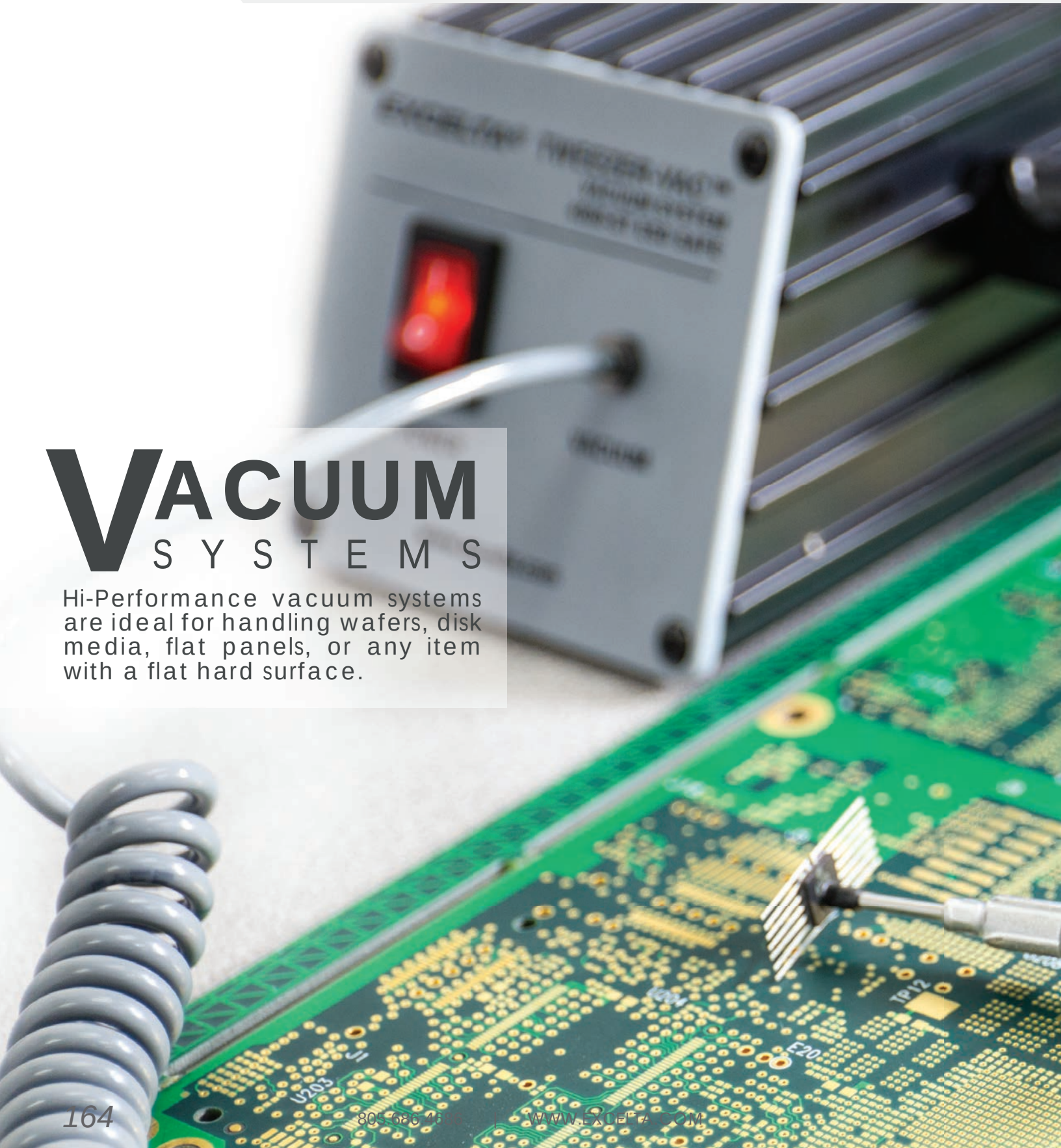

★★★★★ ULTRA PRECISION
★★★★ EXTREME PRECISION
★★★ HIGH PRECISION

Quality Vacuum Systems

Continuous Vacuum Systems

Roto-Pic® - Vacuum system features thumb-wheel control to rotate tip 360° for perfect alignment of items without rotating the wrist.
4000-ST - Complete work bench general purpose vacuum kit.
4000-HP - Complete work bench high performance vacuum kit.

Portable Vacuum Systems

Pen-Vac® - Self-contained 6” vacuum pens with storage compartments in most pens for storage of various tips.
Handi-Vac® - Self-contained vacuum bulb kit for convenient use anytime, anywhere.

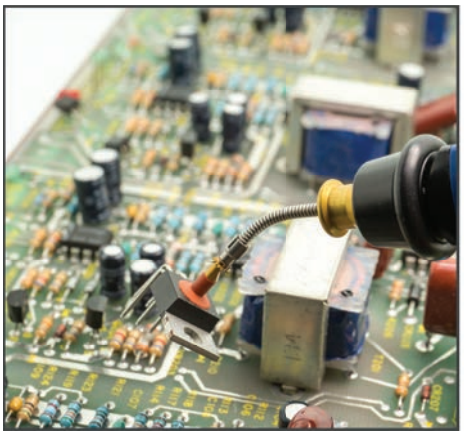

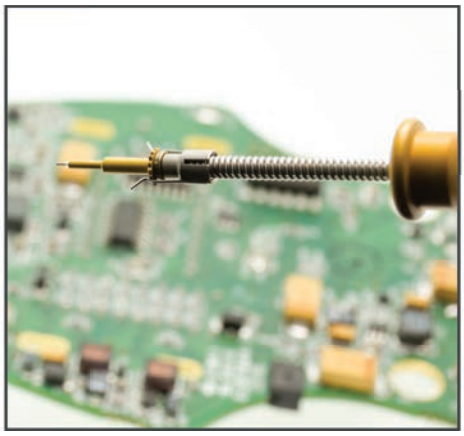

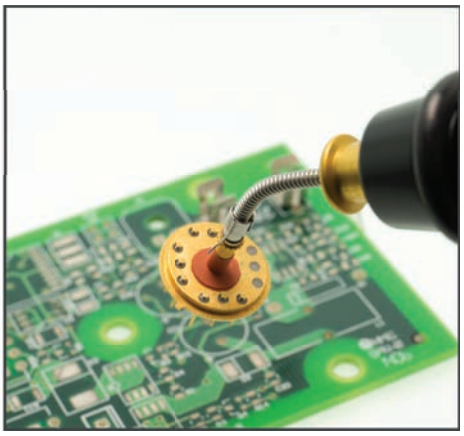

The most revolutionary vacuum pick-up available. Designed to reduce manual handling of both chips and wafers. The Roto-Pic® has a smooth positive hold-and-release slide bar. The round nose wheel rotates 360° so components can be picked up and aligned with ease. Easily replaceable tips come in a variety of sizes and silicon rubber cups which can be inserted on Roto-Pic for pick-up and manipulation.

VACUUM KITS

2000RK Complete Vacuum System Kit
Complete vacuum handling system includes one each of the following kits:
2000R, 2000P, 2000WP, 2000DA

2000R Vacuum System Kit
Contains one each of the following:
2000A, 2000V, 2000C

2000P Probe Kit
Contains one each of the following probes:
2020, 2021, 2022, 2023, 2024

2000WP Vacuum Cup Kit
Contains one each of the following cup assemblies:
2050, 2051, 2052, 2060, 2071

2000DA Vacuum Tip Kit
Contains one each of the following tip assemblies:
2040, 2041, 2043, 2044

2000R Roto-Pic Vacuum System

Ref. No	Description
2000A	Roto-Pic® Handpiece
2000V	Vacuum Pump
2000C	3' Plastic Hose

Vacuum Probes

For use with Roto-Pic® Handpiece (2000A)

Ref. No	Description
2020	45°
2021	60°
2022	45° short
2023	90°
2024	straight

2020

2021

2022

2023

2024

Vacuum Cup Assemblies

High temperature vacuum cups made of silicon rubber with brass fittings.

Ref. No	Description
2050	.38"(09.50mm) Cup
2051	.50"(12.50mm) Cup
2052	.25"(06.25mm) Cup
2060	Circo-Vac Cup
2071	Verto-Vac w/high temp support

2050

2051

2052

2060

2071

Small Tip Assemblies

Vacuum Tips for handling small parts, for use with Roto-Pic® Probes and Handpiece

Ref. No	Description	Tip Material
2040	.006"(.15mm)	Teflon
2041	.005"(.13mm)	Polyethylene
2043	.012"(.30mm)	Polyethylene
2044	.035"(.88mm)	Polyethylene

2040

2041

2043

2044

4000-ST ★★★★

General Purpose Vacuum System

A general purpose vacuum handling tool which plugs directly into 110 VAC. This compact unit will handle most of the surface mount components used in the industry today. The long life diaphragm vacuum pump generates up to 10 inches of mercury with an open air flow of 2.3 lpm. The unit connects to ground automatically with a three-wire power cord.

The 4000-ST comes complete with the following features:

- Whisper-quiet operation.
- 5 feet of coiled vacuum hose.
- Vacuum pick-up handpiece.
- No-skid rubber feet.
- Produces vacuum of over 10 inches of mercury.
- Side mounted handpiece holder.
- Set of nine vacuum tips: **PVS-CB-12, PVS-CB -14 PVS-CB-18, PVS-CB-38, PVB-CB-332, PVB-CB-316, PVB-CB-14, PVB-CB-18, PVB-CB-38.**

Individual System Components ★★★★

4000-H Handle for 4000-HP/ST
4000-RF Replacement Filter for 4000-HP

PV-HV ★★★ Length 3" (75mm)

Handi-Vac® is a vacuum bulb pick-up tool that is simple and easy to use. When the vacuum bulb is squeezed, place the soft suction cup on the part to be handled. A second squeeze releases the part.

Kit Contains:

Hand Piece - **PV-HV-B**
Probe/Cup Assemblies - **PVB-CB-18, PVB-CB-14 PVS-CB-18, PVS-CB-38**

Pen-Vac® and Handi-Vac® tools are ESD Safe with a surface resistivity of 10^{11}-10^{12} ohms/sq. They are excellent tools for picking up and placing standard and odd size flat surface items. These systems are mechanical, making them extremely portable.

PV-1-ESD-CNX **Length 5" (125mm)**

Kit Contains:
Hand Piece - **PV-JR**
Probe/Cup Assemblies - **PVS-CB-12, PVB-CB-12**
Other Cups - **CB-14, CB-38**

PV-2A-ESD **Length 6" (150mm)**

Kit Contains:
Hand Piece **PV-ST** (Rear Storage)
Probe/Cup Assemblies - **PVB-CB-18, PVB-CB-14, PVB-CB-38**
PVS-CB-18, PVS-CB-14, PVS-CB-38

PV-2-ESD **Length 6" (150mm)**

Kit Contains:
Hand Piece **PV-ST** (Rear Storage)
Probe/Cup Assemblies - **PVB-CB-18, PVB-CB-14**

PV-3A-ESD **Length 5" (125mm)**

Kit Contains:
Hand Piece - **PV-JR**
Probe/Cup Assemblies - **PVB-CB-18, PVB-CB-14, PVB-CB-38**
PVS-CB-18, PVS-CB-14, PVS-CB-38

The following hand pieces can be ordered in kit form on page 169, or you can create your own kit by adding cups and probes from page 171.

PV-JR — Length 5" (125mm)

Pen-Vac® Junior comes with a handpiece and pocket clip. Depressing the button compresses the bellows to create the vacuum. Great for handling small flat items.

(Replacement hand piece for PV-1-ESD-CNX kit and PV-3A-ESD kit)

PV-ST — Length 6" (150mm)

Pen-Vac® Standard comes with a handpiece and pocket clip. Unlike the PV-JR, the PV-ST includes a rear storage compartment for cups and probes. Depressing the button compresses the bellows to create the vacuum. Great for handling small flat items

(Replacement hand piece for PV-2-ESD kit and PV-2A-ESD kit)

PV-HV-B — Length 3" (75mm)

Handi-Vac® is a vacuum bulb pick-up tool that is simple and easy to use. When the vacuum bulb is squeezed, place the soft suction cup on the part to be handled. A second squeeze releases the part.

(Replacement hand piece for PV-HV Kit.)

Finest Quality Replacement Cups and Probes

- Cup sizes from .10”(2.5mm) to .75”(18.75mm)
- Made of Buna-N ESD Safe (10^8-10^{12} ohms/sq) non-marking material
- Working temperature -5° to 250°F
- Interchangeable with Pen-Vac® Junior, Pen-Vac® Standard, Pen-Vac® Pro, Handi-Vac®, 4000-ST and 4000HP

Straight Probes

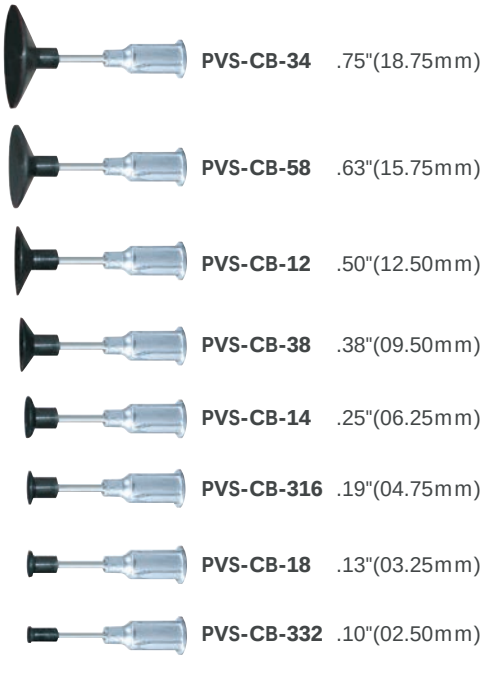

PVS-CB-34	.75"(18.75mm)
PVS-CB-58	.63"(15.75mm)
PVS-CB-12	.50"(12.50mm)
PVS-CB-38	.38"(09.50mm)
PVS-CB-14	.25"(06.25mm)
PVS-CB-316	.19"(04.75mm)
PVS-CB-18	.13"(03.25mm)
PVS-CB-332	.10"(02.50mm)

Angulated Probes

PVB-CB-34	.75"(18.75mm)
PVB-CB-58	.63"(15.75mm)
PVB-CB-12	.50"(12.50mm)
PVB-CB-38	.38"(09.50mm)
PVB-CB-14	.25"(06.25mm)
PVB-CB-316	.19"(04.75mm)
PVB-CB-18	.13"(03.25mm)
PVB-CB-332	.10"(02.50mm)

Cups

CB-34	.75"(18.75mm)
CB-58	.63"(15.75mm)
CB-12	.50"(12.50mm)
CB-38	.38"(09.50mm)
CB-14	.25"(06.25mm)
CB-316	.19"(04.75mm)
CB-18	.13"(03.25mm)
CB-332	.10"(02.50mm)

Small Tips

Designed for handling very small parts. Tips are made in ESD Safe Acetal Plastic so there is no chance of static or mechanical damage. These small tips are used ONLY with the 4000-ST or 4000HP.

Angulated Tips

PVB-04 OD 0.05" ID 0.04"

PVB-02 OD 0.03" ID 0.02"

PVB-005 OD 0.02" ID 0.005"

Straight Tips

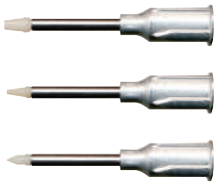

PVS-04 OD 0.05" ID 0.04"

PVS-02 OD 0.03" ID 0.02"

PVS-005 OD 0.02" ID 0.005"

INDEX BY TYPE

BRUSHES
Cleanroom Safe
212A-H 149
212B-H 149
212C-H 149
212D-H 149
213A-N 149
213B-N 149
213C-N 149
213D-N 149
ESD Safe
194-ESD 151
196-ESD 151
197-ESD 151
Instrument Cleaning
210B-H 148
210B-N 148
210B-P 148
210B-S 148
210S-H 148
210S-N 148
210S-P 148
210S-S 148
211A-N 148
211B-N 148
211C-N 148
211D-N 148
Scratch/Cleaning
186 150
187 150
189 150
190 150
214-H 150
215-H 150
262 150
263 150
263A 150
264 150
264A 150
265 150
265A 150
266 150
266A 150
267 150
267A 150
268 150
268A 150

CUTTERS
Angled
67EI 25
90EI 25
7104E 24
7172E 24
7175E 23
7182E 23
7204E 24
7272E 24
7275E 23
7282E 23
7375E 22
7376E 22
Cable
51I-6 33
51I-6DP 33
Hard Wire
2876EHT 27
2896EHT 27
2897EHT 27
2899EHT 27
2899EHT-CR 27

CUTTERS (Cont)
Oval
7140E 18
7141E 18
7142E 18
7240E 18
7241E 18
7242E 18
7210E 19
7250E 19
7251E 19
7260E 19
7261E 19
9231SL 14
9232SL 14
9231E 15
9232E 15
9240E 17
9240SL 16
9241E 17
9241E-GM 17
9241SL 16
9242E 17
9242SL 16
Standoff-Shear
509-42A-US-XX 32
530E-US-XX 29
530E-4-US-XX 30
530E-5-USL-XX 29
530E-15-US 29
530E-15-US-RSS 29
530EA-US-XX 29
549E-US-XX 32
903-XX 31
903A-XX 31
907-1-XX 30
907-4-XX 30
907-5-XX 31
907-42A-XX 32
907-59-XX 32
Tapered
9235SL 14
7143E 18
7144E 18
7145E 18
7243E 18
7244E 18
7245E 18
9243SL 16
9244SL 16
9245SL 16
9243E 17
9244E 17
9244E-GM 17
9245E 17
Tapered and Relieved
7146E 18
7147E 18
7148E 18
7246E 18
7247E 18
7248E 18
9238SL 14
9238E 15
9246E 17
9246SL 16
9247E 17
9247SL 16
9248E 17
9248SL 16

CUTTERS (Cont)
Tip Cutters
7149E 21
7170E 20
7170EA 21
7171E 20
7249E 21
7270E 20
7271E 20
7270EA 21
7371E 20
Transverse
73E-I 26
7173E 26
7174E 26
7273E 26
7274E 26

HEMOSTATS
Standard
35PH 145
35-SE 145
36PH 145
36-SE 145
37PH 145
37-SE 145
38PH 146
38-SE 146
39PH 146
39-SE 146
40PH 146
40-SE 146
Mosquito/Needle Clamps
NH-35-SE 147
NH-38-SE 147
31-SE 147
33A-SE 147
33-SE 147
36A-SE 147

KITS
KST-DIS-1 129
KST-DIS-2 129
KST-10 127
KST-10-SE 127
KST-5 127
KST-5-SE 127
TW-700 128
TW-900 128

LAB FORCEPS
Adson Tissue
AF-2-SE 133
AF-3-SE 133
AF-4-SE 133
F-6-SE 133
Dissection
AF-1-SE 131
F-5-SE 131
10G-SA 131
10H-S-SE 131
Dressing
F-2-SE 134
F-3-SE 134
F-4-SE 134
24-4-SE 134
Rogeur
R-275-C 135
R-275-S 135
R-277-C 135
R-277-S 135

LAB FORCEPS
Soft Tissue Handling
F-7-SE 132
20A-1-SE 132
23B-S-SE 132
23D-S-SE 132

MAGNIFIERS/LOUPES
401 160
405 160
407 160
410 160
422 160
455A 160

MINIATURE OILERS
260A 154
260A-ESD 154
260A-ET 155
260A-R 154
260AA 154
260B 154
260B-ESD 154
260B-ET 155
260C 154
260C-ESD 154
260C-ET 155
260D 154
260D-ESD 154
260D-ET 155
260D-R 154
260E-ESD 154
260H 155
320-DP 155

PIN VISES
220 157
227A 157
227A-ET 157
227B 157
227B-ET 157
227C-ET 157
227C-P 157
227D-ET 157

PLIERS
Bent Nose
381 36
384 36
2629 37
2829-CR 44
2829D-CR 44
2629S 38
2629SD 38
2829 41
2829L 41
2829L 41
2829LD 41
2829SLD 41
2904 43
2914 43
Chain Nose
11I 40
11DI 40
44I 39
382 36
744 40
2644 37
2644D 37
2644S 38
2644SD 38

PLIERS (Cont)

Chain Nose (Cont)

2844 41
2844-CR 44
2844D 41
2844D-CR 44
2844L 41
2844LD 41
2844SL 41
2844SLD 41
2949 43

Concave/Convex

500-101-US 46
500-101A-US 46

Flat Nose

42I 39
385 36
2642 37
2642S 38
2642SD 38
2818 42
2842 42
2842-CR 44
2842D 42
2842D-CR 44
2842L 42

Needle Nose

47I 39
383 36
2647 37
2647D 37
2647S 38
2647SD 38
2847 41
2847-CR 44
2847D 41
2847D-CR 44
2847L 41
2847LD 41
2847SL 41
2847SLD 41
2905 43
2910 43

Round Blunt Nose

531-US 45
531A-US 45
531B-US 45
532-US 45
532B-US 45

Round/Flat Nose

533-US 45

Round Nose

43I 39
386 36
743 40
2643 37
2643S 38
2843 42
2843-CR 44
2843L 42
2843SL 42

Tubing

51-T 47
379A 47
379B 47
379C 47
2922-14 47
2922-14-X 47
2922-18 47
2922-38 47

PLIERS (Cont)

Wide Nose

508-US 46
508B-US 46
508C-US 46
508D-US 46

PROBES/SCRIBES

Lab Specific

333 159
333B 159
333C 159
333D 159
333E 159
333F 159

Standard

330A 158
330B 158
330C 158
330D 158
330E 158
330K 158
331A 158
331B 158
331C 158
331D 158
332A 158
332B 158
332C 158
332D 158
332E 158
333A 158
335A 158
335B 158
334 158
334C 158
334D 158
475A 158
475B 158
477 158
478 158

SCALPEL/RAZOR BLADES

177 152
177-10 152
177-11 152
177-11-R 152
177-12 152
174 153
175-11 153
176-1 153
176-2 153
176-3 153
176-4 153
177A 153
177-13 152
177-15 152
177-SE 152
178-11-S 153
181-10 152
181-22 152
181-SE 152
181A-SE 152

SCISSORS

Delicate Applications

351 139
352 139
353 139
354 138
355 138

SCISSORS (Cont)

Delicate Applications (Cont)

356 138
357 138
358 138
359 139
361 137
361S 137
362 137
362S 137
363 137
364 137
365 137

Standard Fine Precision

270 141
270EC 141
271 143
272 143
273 143
274 143
274A 143
275 143
275A 143
276 143
277 143
277A 143
278 143
288 140
289 140
290 142
290EC 142
291 142
292 142
295 142
297 142
298 142
298A 142
298AB 142
298B 142
298B-EC 142
298EC 142
299 141
299EC 141
346 140
346A 140
346B 140
348 140
349 140
349A 140
349B 140
366 140
367 140
368 140
376 143

Large

299P 144
309 144
339 144
340 144
341 144

Tungsten Carbide Blades

270-HT 136
271-HT 136
279-HT 136
346-6-HT 136
347-6-HT 136
371A 136
371B 136

SPATULAS/MIRRORS

342 156

SPATULAS/MIRRORS (Cont)

343 156
345 156
415 156
416 156
417 156

SPECIAL TOOLS

Cutters/Lead Formers

500-13A-US 52
500-13B-US 52
500-88-US 50
500-89-US 50
500-89B-US 51
500-103-US 52
500-108-US 50
530E-1-US 50
554-TXC-US 52
900-10 52
900-88B 51
907 50
907-88 51
907-88C 51
907-89 51
907-89B 52
930E-1 50

Insertion/Extraction Tools

505-US 57
505-20-US-ST 57
505A-US 57
505B-US 57
505BG-US 57
505C-US 57
505D-US 57
505E-US 57
505F-US 57
505G-US 57
505H-US 57
505J-US 57
505K-US 57

Lead Forms

500-11-US 53
500-15-US 55
500-92-US 53
500-95B-US 56
500-104-US 56
500-104B-US 56
500-210-US 56
500-210A-US 56
500-210C-US 55
554A-US 53
554B-US 53
554F-US 53
554-3RB-US 54
554-TX-US 54
554-TXB-US 54
907-104A 55
907-210A 55
909-4 54
909-4B 54
954A 53
954B 54

TEST/MEASUREMENT

Continuity Tester

PB-1 161
PB-1L 161

R-C-L Meter

TM-500 162
TM-500-BX 162
TM-500-PX 162

INDEX BY TYPE

TWEEZERS

5 Star Cobalt Alloy
2-CO 63
3-CO 63
4-CO 63
5-CO 63
3C-CO 64
5A-CO 64
7-CO 64
7B-CO 64
51-CO 64
M-3-CO 65
M-3-CO-ET 65
M-5-CO 65
M-5-CO-ET 65
M-6-CO 65

Acetal Replaceable Tip
M-159B-RTW 113
M-159C-RTW 113
M-159D-RTW 113
M-759-RTW 113
M-759D-RTW 113
159B-RTW 114
159B-RTWX 114
159C-RTW 114
159C-RTWX 114
159D-RTW 114
159D-RTWX 114

Angled Medium Point
22 84
22-SA 84
24-6-SA 84
24-8-SA-SE 84
24A-S-SE 84
24-SA-PI 84
24-SA-SE 84
24-SA-SE-PH 84

Angled Very Fine Point
3CB-S 76
5A-S 76
5A-S-SE 76
5A-SA 76
5A-SA-PI 76
5A-SA-SE 76
5B-SA 76
5B-SA-PI 76
5C-SA 77
6-PI 78
6-S 78
6-S-SE 78
6-SA 78
6-SA-PI 78
6-SA-SE 78
50-SA-PI 77
51-S 77
51-SA 77
51-SA-PI 77
65A-SA 77

Carbon Fiber Replaceable Tip
M-159-RT 113
M-159A-RT 113
M-159B-RT 113
M-159C-RT 113
M-159D-RT 113
M-159E-RT 113
M-159F-RT 113
M-159G-RT 113
M-759D-RT 113
159-RT 111
159-RTX 111
159A-RT 111

TWEEZERS (Cont)

Carbon Fiber Replaceable Tip
159A-RTX 111
159B-RT 111
159B-RTX 111
159C-RT 112
159C-RTX 112
159D-RT 112
159D-RTX 112
159E-RT 112
159E-RTX 112
159F-RT 112
159F-RTX 112
159G-RT 111
159G-RTX 111
759-RT 111
759-RTX 111
759D-RT 112
759D-RTX 112

Ceramic
149B-CE 115
277-CE 115
277-CE-ET 115
749A-CE 115

Copolymer Replaceable Tip
179A-RT 110
179A-RTX 110
179D-RT 110
179D-RTX 110
179DN-RT 110

Cross Action
DN-2A-SA-SE 88
DN-3C-SA-SE 87
DN-7-SA-SE 87
29-SA 88
29-S-SE 88
30-SA 88
30-S-SE 88
31-SA 87
31-SA-C 88

Curved Very Fine Point
7-PI 78
7-S 78
7-S-PI 78
7-S-SE 78
7-SA 78
7-SA-EC 78
7-SA-PI 78
7-SA-SE 78
7B-S 78
7B-SA 78
7B-SA-PI 78
7B-SA-SE 78

Cutting
14A-GW 122
14A-N 122
15 122
15A-C 121
15A-GW 119
15A-GW-ET 121
15A-GW-M 119
15A-GW-OF 119
15A-GW-PB 119
15A-GW-PI 119
15A-GW-S 119
15A-RW 120
15A-RW-ET 121
15A-RW-M 120
15A-RW-OF 120
15A-RW-PB 120
15A-RW-S 120

TWEEZERS (Cont)

Cutting (cont)
15A-SW 121
52-MW 123
54-MW 123
55-MW 123

Ergonomic
AA-SA-ET 97
AA-SA-PI-ET 97
SS-SA-ET 96
00-SA-ET 97
00-SA-PI-ET 97
00D-SA-ET 97
00D-SA-PI-ET 97
00-SA-R 93
1-SA-ET 95
2-SA-ET 95
2A-SA-ET 99
2A-SA-PI-ET 99
2A-SA-R 93
3-CO-ET 96
3-SA-ET 96
3-SA-PI-ET 96
3C-CO-ET 96
3C-SA-ET 96
3C-SA-PI-ET 96
3C-SA-SE-ET 96
3C-SA-R 93
4-SA-ET 95
5-CO-ET 95
5-S-ET 95
5-SA-ET 95
5-SA-PI-ET 95
5-SA-R 93
5A-SA-ET 98
5A-SA-PI-ET 98
5B-SA-ET 98
5B-SA-PI-ET 98
6-SA-ET 99
6-SA-PI-ET 99
7-CO-ET 98
7-SA-ET 98
7-SA-PI-ET 98
7-SA-R 93
51-CO-ET 99
51-SA-PI-ET 99

Exotic Metals
00-S-CC 69
00-SA-DC 68
00-SA-SE-TC15 71
2A-S-CC 69
2A-SA-DC 68
2A-SA-PI-TC15 71
2A-SA-SE-TC15 71
2A-SA-TC15 71
2A-SA-TC30 71
2A-SN 67
2A-TA 70
3C-S-CC 69
3C-SA-DC 68
3C-SN 67
3C-TA 70
5-S-CC 69
5-SA-DC 68
5-SA-SE-TC15 71
5-SN 67
5-TA 70
7-S-CC 69
7-SA-DC 68
7-SA-SE-TC15 71
7-SN 67

TWEEZERS (Cont)

Exotic Metals (Cont)
7-TA 70
SS-SA-DC 68

Large Flat Point
8-SA-PI 86
25-SA 86
27-SA 86
35A-SA 86
35A-SA-SE 86
36A-SA 86
36A-SA-SE 86

Miniature
M-AC 91
M-H-S 91
M-H-SA 91
M-00D 91
M-00D-SA 91
M-2-SA 91
M-2A-SA 91
M-3-S 90
M-4-S 90
M-4A-S 90
M-5-S 90
M-5-SA 90
M-5-SA-ET 90
0C 90
0C-SA 90
0C-SA-PI 90
0C-SA-SE 90
M-179A-RT 91

Plastic
2A-ESD 117
3C-ESD 117
6-ESD 117
35A-ESD 117
609-ESD 117

Peek Replaceable Tip
162A-RT 109
162A-RTX 109
162B-RT 109
162B-RTX 109
162C-RT 109
162C-RTX 109
162D-RT 109
162D-RTX 109
762A-RT 109
762A-RTX 109

Small Parts Handling
31B-SA-SE 104
40-S 104
102A-SA 101
103-SA 101
104-SA 101
109-SA 101
110-SA 102
111-SA 102
115-SA 102
116-CF 104
116-CF-RTX 104
116-SA 103
121-SA 102
122-SA 103
123-SA 101
124-SA 103
125-SA 103
126-SA 103
815-SA-SE 104
815B-SA-SE 104

Straight Broad/Medium Point
21-SA-PI 83

TWEEZERS (Cont)

Straight Broad/Medium Point

21-SA-SE 83
21-SA-SE-8 83
21-SA-SE-12 83
21-SA-SE-18 83
21-SA-SE-24 83
21-6-SA 83
21-8-SA 83
231-SA-SE 83
231A-SA-SE 83

Straight Medium Point

AA 79
AA-S 79
AA-S-SE 79
AA-SA 79
AA-SA-PI 79
AA-SA-SE 79
AA-SA-SE-PH 79
AA-SE 79
AC 81
AC-PI 81
AC-SA 81
AC-SA-PI 81
AC-SA-SE 81
GG-SA 79
MM 79
MM-SA-PI 79
MM-SA-SE 79
MM-SE 79
19-S 81
20A-S-SE 81
20-SA-PI 81

Straight Strong Point

00 80
00-PI 80
00-S 80
00-SA 80
00-SA-EC 80
00-SA-PI 80
00-SA-SE 80
00-SE 80
00B-SA 80
00B-SA-PI 80
00B-SA-SE 80
00D 80
00D-SA 80
00D-SA-PI 80
00D-SA-SE 80
000-SA 80
000-SA-PI 80

Straight Round Fine Point

0 82
0-SA 82
0-SA-SE 82
0A 82
00C 82
00C-SA 82
00C-SA-SE 82

Straight Tapered

2-S 73
2-S-SE 73
2-SA 73
2-SA-PI 73
2-SA-SE 73
4-SA 73
4-SA-PI 73

TWEEZERS (Cont)

Straight Tapered (cont)

4-SA-SE 73
5 73
5-S 73
5-S-PI 73
5-S-SE 73
5-SA 73
5-SA-EC 73
5-SA-PI 73
5-SA-SE 73

Straight Very Fine Point

P-S 74
1-PI 74
1-S 74
1-S-SE 74
1-SA 74
1-SA-PI 74
1-SA-SE 74
3-S 74
3-S-PI 74
3-S-SE 74
3-SA 74
3-SA-PI 74
3-SA-SE 74
3C 74
3C-SE 74
3C-PI 74
3C-S 74
3C-S-PI 74
3C-S-SE 74
3C-SA 74
3C-SA-EC 74
3C-SA-PI 74
3C-SA-SE 74
53C-SA 74
60-SA 75
64-SA 75
SS-S 75
SS-S-SE 75
SS-SA 75
SS-SA-PI 75
SS-SA-SE 75

Tapered Flat Round Point

F-SA 85
F-SA-PI 85
2A 85
2A-S 85
2A-S-SE 85
2A-SA 85
2A-SA-EC 85
2A-SA-PI 85
2A-SA-SE 85
2AB-N 85
2AB-SA-PI 85
2AB-SA-SE 85
52A-SA 85

Wafer

390-SA-PI 106
390-SA-PI-B 106
390L-SA-PI 106
390L-SA-PI-B 106
390T-SA-PI 106
390T-SA-PI-B 106
391-SA-PI 106
391-SA-PI-B 106
391P-SA-PI 106

TWEEZERS (Cont)

Wafers (Cont)

391P-SA-PI-B 106
490-SA-PI 106
490-SA-PI-B 106
490L-SA-PI 106
490L-SA-PI-B 106
490T-SA-PI 106
490T-SA-PI-B 106
491-SA-PI 106
491-SA-PI-B 106
491D-SA-PI 106
491D-SA-PI-B 106
491P-SA-PI 106
491P-SA-PI-B 106
590-SA-PI 107
590-SA-PI-B 107
590L-SA-PI 107
590L-SA-PI-B 107
590T-SA-PI 107
590T-SA-PI-B 107
591-SA-PI 107
591-SA-PI-B 107
591D-SA-PI 107
591D-SA-PI-B 107
591P-SA-PI 107
591P-SA-PI-B 107
690-SA-PI 107
690-SA-PI-B 107
690L-SA-PI 107
690L-SA-PI-B 107
690T-SA-PI 107
690T-SA-PI-B 107
691-SA-PI 107
691-SA-PI-B 107
691D-SA-PI 107
691D-SA-PI-B 107
691P-SA-PI 107
691P-SA-PI-B 107
890L-SA 107
890L-SA-B 107
891-SA 107
891-SA-B 107

VACUUM SYSTEMS

Continous Vacuum

PV-HV 168
2000DA 166
2000P 166
2000R 166
2000RK 166
2000WP 166
2000A 167
2000C 167
2000V 167
2020 167
2021 167
2022 167
2023 167
2024 167
2040 167
2041 167
2043 167
2044 167
2050 167
2051 167
2052 167

VACUUM SYSTEMS(Cont)

2060 167
2071 167
4000-H 168
4000-RF 168
4000-ST 168

Pen Vacs

CB-12 171
CB-14 171
CB-18 171
CB-34 171
CB-38 171
CB-58 171
CB-316 171
CB-332 171
PV-1-ESD-CNX 169
PV-2-ESD 169
PV-2A-ESD 169
PV-3A-ESD 169
PV-HV 168
PV-HV-B 170
PV-JR 170
PV-ST 170
PVB-02 171
PVB-04 171
PVB-05 171
PVB-CB-12 171
PVB-CB-14 171
PVB-CB-18 171
PVB-CB-34 171
PVB-CB-38 171
PVB-CB-58 171
PVB-CB-316 171
PVB-CB-332 171
PVS-02 171
PVS-04 171
PVS-05 171
PVS-CB-12 171
PVS-CB-14 171
PVS-CB-18 171
PVS-CB-34 171
PVS-CB-38 171
PVS-CB-58 171
PVS-CB-316 171
PVS-CB-332 171

WIRE STRIPPERS

Pliers

502E-US-22 125
502E-US-24 125
502E-US-26 125
502E-US-28 125
502E-US-30 125
502E-US-50 125
510E-US 125

Tweezers

15A-ST-P3-38 124
15A-ST-PE-30 124
15A-ST-PE-32 124
15A-ST-PE-34 124
15A-ST-PE-36 124
15A-ST-PE-36-G 124
15A-ST-PE-40 124
15A-ST-PE-40-R 124
15A-ST-PE-42 124
15A-ST-PE-42-Y 124
15A-ST-PE-46 124

LIMITED WARRANTY: There are no express warranties or implied warranties including, but not limited to, merchantability and fitness for a particular purpose.

COPYRIGHT © 2020 BY EXCELTA CORPORATION, Buellton, CA.

No part of this publication may be reproduced, stored in a retrieval system, or transmitted in any form or by any means, mechanical, photocopying, recording or otherwise,without the prior written permission of the Excelta Corporation.
The words Excelta®, Altima®, Precista®, Optima®, Cobaltima®, Neverust®, Selecta®, Lazer Line™, Ergo-Tweeze®, Intellitweeze® and TweezerMeter® are registered trademarks of Excelta Corporation.

Produced by Jim LaFrance & Daniel Graef. Photography by Daniel Graef.

EXCELTA®
SINCE 1957

Lazerline® Cutters

Pliers

Tweezers

Custom Tools

visit us @
excelta.com

WOMEN OWNED

Green Business Certified

EXCELTA®
SINCE 1957

60 Easy Street, Buellton, California 93427 | Tel: 805-686-4686 | Fax: 805-686-9005 | www.excelta.com