FLIR E60 (incl. Wi-Fi)

P/N: 64501-0302

Copyright

© 2015, FLIR Systems, Inc.

All rights reserved worldwide. Names and marks appearing herein are either registered trademarks or trademarks of FLIR Systems and/or its subsidiaries. All other trademarks, trade names or company names referenced herein are used for identification only and are the property of their respective owners.

Document identity

Publ. No.: 64501-0302
Release:
Commit: 22369
Language: en-US
Modified: 2014-12-19
Formatted: 2015-01-11

Corporate Headquarters

FLIR Systems, Inc.
27700 SW Parkway Ave.
Wilsonville, OR 97070
USA
Telephone: +1-503-498-3547

Website

http://www.flir.com

Customer support

http://support.flir.com

Disclaimer

Specifications subject to change without further notice. Camera models and accessories subject to regional market considerations. License procedures may apply. Products described herein may be subject to US Export Regulations. Please refer to exportquestions@flir.com with any questions.

General description
The FLIR Exx series cameras are compact and rugged infrared cameras that can be used in harsh environments while still providing you with the latest technology such as a modern touch screen and wireless connectivity. A FLIR Exx series camera is the perfect choice when you are looking for a robust but feature-rich camera at an affordable price.
Benefits:
• Robust and sophisticated: The FLIR Exx series cameras have a robust and light-weight design and can withstand a 2 m drop. Large buttons combined with a modern touch screen and extensive measuring capabilities, they are the right choice for demanding inspections in the field. • Easy communication: The Wi-Fi connectivity of the FLIR Exx series cameras allows you to connect to smart phones and tablets, for the wireless transfer of images or the remote control of the camera. The Bluetooth-based METERLiNK function transfers readings from external measurement instruments to the infrared image. • Best value for money: The FLIR Exx series cameras combine good performance (up to 320 × 240 pixels), a user-friendly interface, and a rugged point-and-shoot design with an affordable price.

Imaging and optical data	
IR resolution	320 × 240 pixels
Thermal sensitivity/NETD	< 0.05°C @ +30°C (+86°F) / 50 mK
Field of view (FOV)	25° × 19°
Minimum focus distance	0.4 m (1.31 ft.)
Focal length	18 mm (0.7 in.)
Spatial resolution (IFOV)	1.36 mrad
F-number	1.3
Image frequency	60 Hz
Focus	Manual
Digital zoom	2× and 4×
Panning	Panning over zoomed-in images

FLIR E60 (incl. Wi-Fi)

P/N: 64501-0302
© 2015, FLIR Systems, Inc.
#64501-0302; r. /22369; en-US

Detector data	
Detector type	Focal plane array (FPA), uncooled microbolometer
Spectral range	7.5–13 µm

Image presentation	
Display	Touch screen, 3.5 in. LCD, 320 × 240 pixels
Image adjustment	Auto or manual

Image presentation modes	
Image modes	IR image, visual image, MSX, picture in picture, thumbnail gallery
Picture in Picture	Scalable IR area on visual image

Measurement	
Object temperature range	• –20°C to +120°C (–4°F to +248°F) • 0°C to +650°C (+32°F to +1202°F)
Accuracy	±2°C (±3.6°F) or ±2% of reading, for ambient temperature 10°C to 35°C (+50°F to 95°F)

Measurement analysis	
Spotmeter	3
Area	3 boxes with max./min./average
Automatic hot/cold detection	Auto hot or cold spotmeter markers within area
Difference temperature	Delta temperature between measurement functions or reference temperature
Reference temperature	Manually set or captured from any measurement function
Emissivity correction	Variable from 0.01 to 1.0 or selected from materials list
External optics/windows correction	Automatic, based on inputs of optics/window transmission and temperature
Measurement corrections	Reflected temperature, optics transmission and atmospheric transmission

Set-up	
Color palettes	Arctic, Gray, Iron, Lava, Rainbow and Rainbow HC
Set-up commands	Local adaptation of units, language, date and time formats

Storage of images	
Image storage	Standard JPEG, including measurement data, on memory card
Image storage mode	Simultaneous storage of images in IR, visual and MSX

Image annotations	
Voice	60 seconds (via Bluetooth)
Text	Text from predefined list or soft keyboard on touch screen

FLIR E60 (incl. Wi-Fi)

P/N: 64501-0302
© 2015, FLIR Systems, Inc.
#64501-0302; r. /22369; en-US

Image annotations	
METERLiNK	Wireless connection (Bluetooth) to: FLIR meters with METERLiNK
Report generation	• FLIR Tools software specifically designed to provide an easy way to create inspection reports. It is available on the major platforms – Android, Windows, MacOS and iOS.

Video recording in camera	
Non-radiometric IR-video recording	MPEG-4 to memory card

Video streaming	
Radiometric IR-video streaming	Full dynamic to PC using USB
Non-radiometric IR-video streaming	Uncompressed colorized video using USB

Digital camera	
Built-in digital camera	3.1 Mpixel (2048 × 1536 pixels), and one LED light
Digital camera, focus	Fixed focus
Built-in digital lens data	FOV 53° × 41°
Digital camera, aspect ratio	4:3

Laser pointer	
Laser	Activated by dedicated button
Laser alignment	Position is automatic displayed on the IR image
Laser classification	Class 2
Laser type	Semiconductor AlGaInP diode laser
Laser power	1 mW
Laser wavelength	635 nm (red)

Data communication interfaces	
Wi-Fi	Peer to peer (adhoc) or infrastructure (network)
SD Card	One card slot for removable SD memory cards
Audio	Microphone headset via Bluetooth for voice annotation of images

USB	
USB	• USB-A: Connect external USB device • USB Mini-B: Data transfer to and from PC / Uncompressed colorized video
USB, standard	USB Mini-B: 2.0
USB, connector type	• USB-A connector • USB Mini-B connector

Composite video	
Video out	Composite
Video, standard	CVBS (ITU-R-BT.470 PAL/SMPTE 170M NTSC)
Video, connector type	4-pole 3.5 mm jack

P/N: 64501-0302
© 2015, FLIR Systems, Inc.
#64501-0302; r. /22369; en-US

Radio	
Wi-Fi	• Standard: 802.11 b/g • Frequency range: 2412–2462 MHz • Max. output power: 15 dBm
Bluetooth	Frequency range: 2402–2480 MHz
Antenna	Internal

Power system	
Battery type	Rechargeable Li Ion battery
Battery voltage	3.7 V
Battery capacity	4.4 Ah, at +20°C to +25°C (+68°F to +77°F)
Battery operating time	Approx. 4 hours at +25°C (+77°F) ambient temperature and typical use
Charging system	In camera (AC adapter or 12 V from a vehicle) or 2-bay charger
Charging time	4 h to 90% capacity, charging status indicated by LED's
Charging temperature	0°C to +45°C (+32°F to +113°F)
Power management	Automatic shutdown and sleep mode (user selectable)
AC operation	AC adapter, 90–260 VAC input, 12 V output to camera
Start-up time from sleep mode	Instant on

Environmental data	
Operating temperature range	–15°C to +50°C (+5°F to +122°F)
Storage temperature range	–40°C to +70°C (–40°F to +158°F)
Humidity (operating and storage)	IEC 60068-2-30/24 h 95% relative humidity +25° C to +40°C (+77°F to +104°F) / 2 cycles
EMC	• ETSI EN 301 489-1 (radio) • ETSI EN 301 489-17 • EN 61000-6-2 (Immunity) • EN 61000-6-3 (Emission) • FCC 47 CFR Part 15 B (Emission) • ICES-003
Radio spectrum	• ETSI EN 300 328 • FCC Part 15.247 • RSS-210
Magnetic fields	EN 61 000-4-8, Test level 5 for continous field (Severe industrial environment)
Encapsulation	IP 54 (IEC 60529)
Shock	25 g (IEC 60068-2-27)
Vibration	2 g (IEC 60068-2-6)
Drop	2 m (6.6 ft.)
Safety	EN/UL/CSA/PSE 60950-1

FLIR E60 (incl. Wi-Fi)

P/N: 64501-0302
© 2015, FLIR Systems, Inc.
#64501-0302; r. /22369; en-US

Physical data	
Camera weight, incl. battery	0.869 kg (1.91 lb.)
Camera size (L × W × H)	246 × 97 × 184 mm (9.7 × 3.8 × 7.2 in.)
Tripod mounting	UNC ¼"-20 (adapter needed)
Material	• Polycarbonate + acrylonitrile butadiene styrene (PC-ABS) • Thixomold magnesium • Thermoplastic elastomer (TPE)
Color	Graphite gray and black

Shipping information	
Packaging, type	Cardboard box
List of contents	• Hard transport case • Infrared camera with lens • Battery (2 ea.) • Battery charger • FLIR Tools download card • Handstrap • Memory card • Power supply, incl. multi-plugs • Printed documentation • USB cable • User documentation CD-ROM • Video cable
Packaging, weight	5.5 kg (12.1 lb.)
Packaging, size	500 × 190 × 370 mm (19.7 × 7.5 × 14.6 in.)
EAN-13	4743254001152
UPC-12	845188005184
Country of origin	Estonia

Supplies & accessories:

- 1196961; IR lens, f = 30 mm, 15° incl. case
- 1196960; IR lens, f = 10 mm, 45° incl. case
- T910814; Power supply, incl. multi plugs
- T911230ACC; Memory card SDHC 4 GB
- 1910423; USB cable Std A <-> Mini-B
- T198509; Cigarette lighter adapter kit, 12 VDC, 1.2 m/3.9 ft.
- 1910582ACC; Video cable
- T197771ACC; Bluetooth Headset
- T911093; Tool belt
- T198125; Battery charger, incl. power supply with multi plugs (Exx, Kxx)
- T198113; IR lens, 76 mm (6°) with case and mounting support for Exx
- T198487; Li-Ion Battery pack 3.7V 17Wh
- T198484; Pouch for FLIR Exx series
- T198486; Tripod Adapter
- T198485; Sun shield
- T198341ACC; Transport case Exx
- T198586; FLIR Reporter Professional (license only)
- T198584; FLIR Tools
- T198583; FLIR Tools+ (license only)
- DSW-10000; FLIR IR Camera Player
- APP-10002; FLIR Tools Mobile (Android Application)

P/N: 64501-0302
© 2015, FLIR Systems, Inc.
#64501-0302; r. /22369; en-US

- APP-10004; FLIR Tools (MacOS Application)
- T198696; FLIR ResearchIR Max 4
- T198697; FLIR ResearchIR Max + HSDR 4
- T198578; FLIR ResearchIR 3 (license only)
- T198574; FLIR ResearchIR 3 Max (license only)
- T198731; FLIR ResearchIR Standard 4

Camera with built-in IR lens f=18 mm (25°)

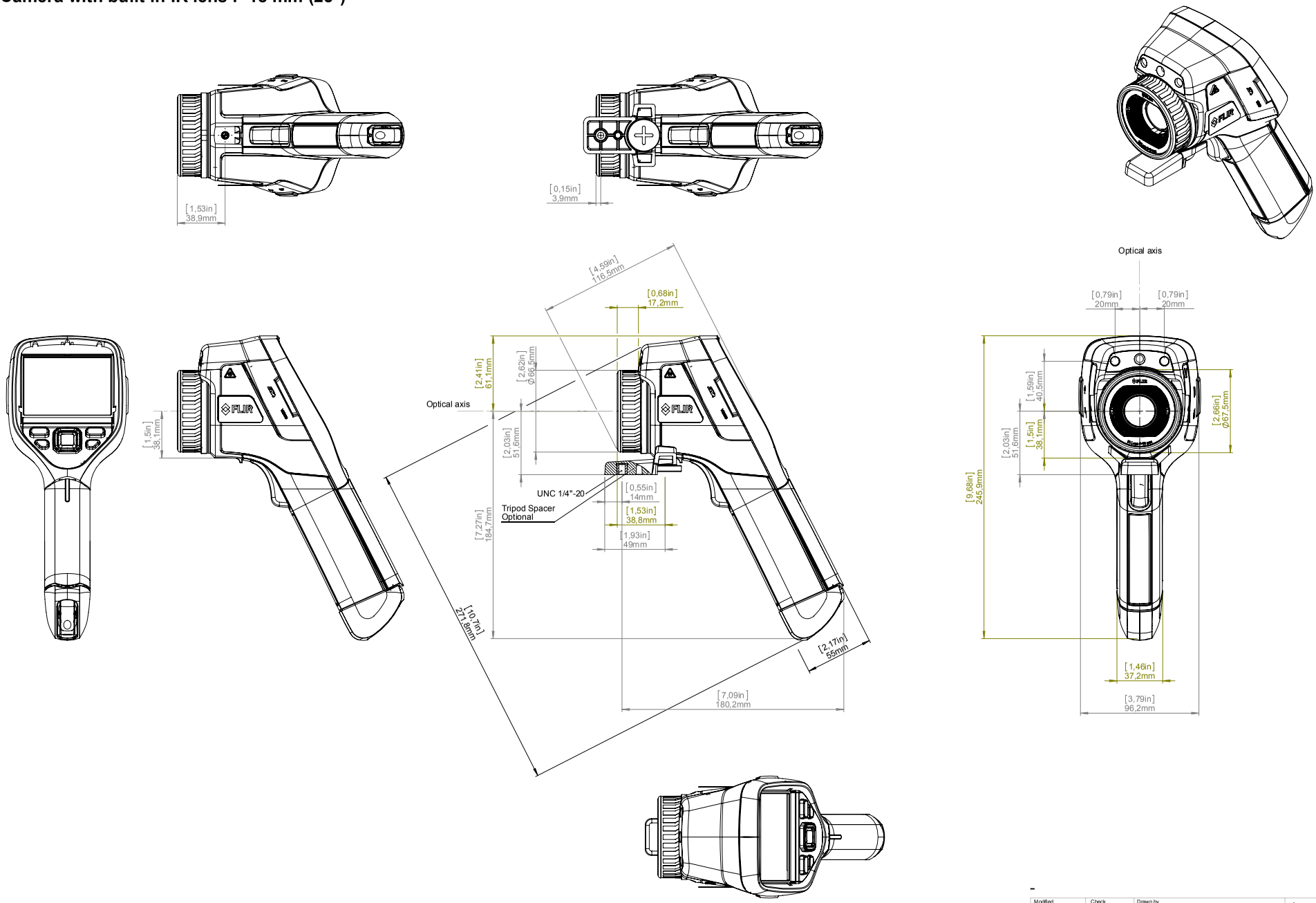

Modified	Check	Drawn by	
2013-04-18	CAHA	R&D Thermography	FLIR
Denomination		Size A3	
Basic dimensions Flir Exx series		Scale 1:2	Sheet 1(4)
		Drawing No. T127869	Size A

© 2012, FLIR Systems, Inc. All rights reserved worldwide. No part of this drawing may be reproduced, stored in a retrieval system, or transmitted in any form, or by any means, electronic, mechanical, photocopying, recording, or otherwise, without written permission from FLIR Systems, Inc. Specifications subject to change without further notice. Dimensional data is based on nominal values. Products may be subject to regional market considerations. License procedures may apply. Product may be subject to US Export Regulations. Please refer to exportquestions@flir.com with any questions. Diversion contrary to US law is prohibited.

Camera with Lens IR f=10 mm (45°)

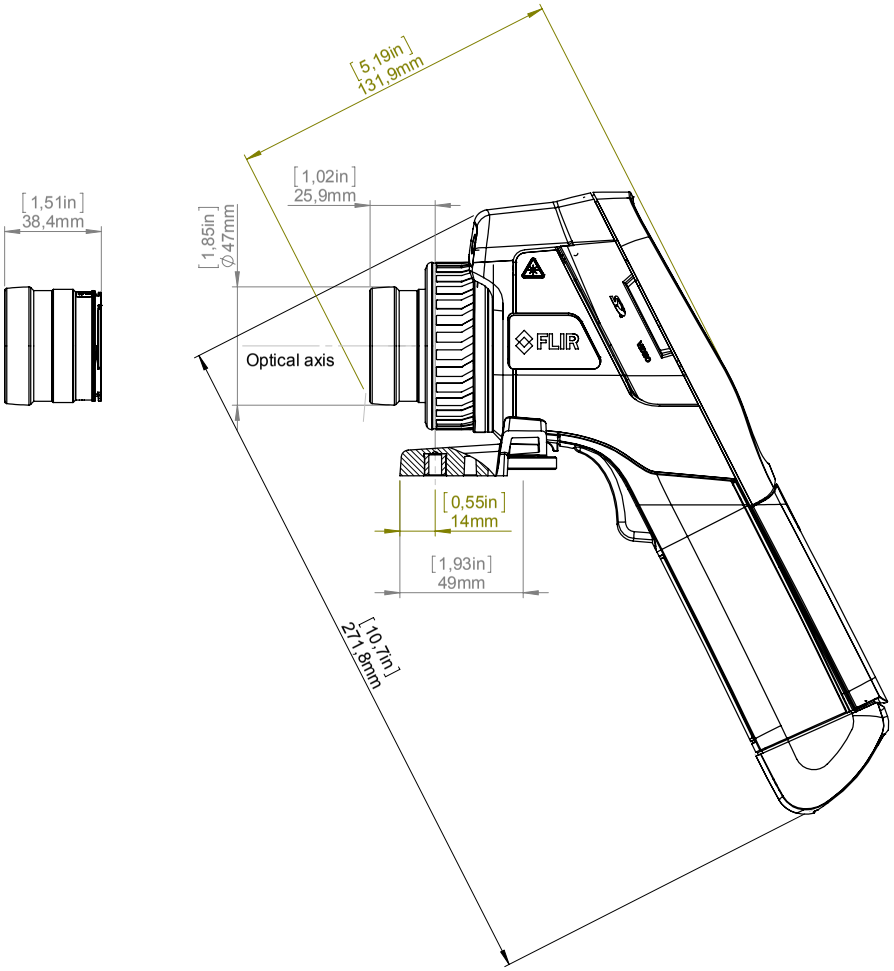

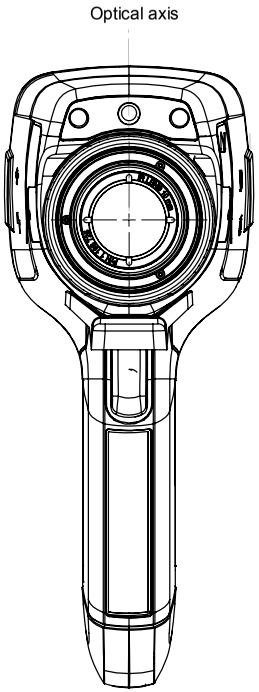

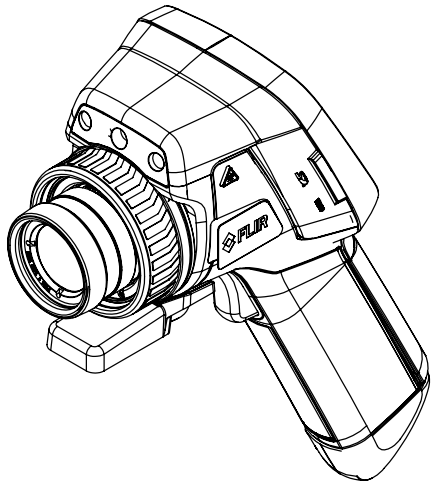

© 2012, FLIR Systems, Inc. All rights reserved worldwide. No part of this drawing may be reproduced, stored in a retrieval system, or transmitted in any form, or by any means, electronic, mechanical, photocopying, recording, or otherwise, without written permission from FLIR Systems, Inc. Specifications subject to change without further notice. Dimensional data is based on nominal values. Products may be subject to regional market considerations. License procedures may apply. Product may be subject to US Export Regulations. Please refer to exportquestions@flir.com with any questions. Diversion contrary to US law is prohibited.

For additional dimensions see page 1

Modified	Check	Drawn by
2013-04-18	CAHA	R&D Thermography

Denomination

Basic dimensions Flir Exx series

Size	Sheet
A3	2(4)
Scale 1:2	
Drawing No. T127869	Size A

Camera with Lens IR f=30 mm (15°)

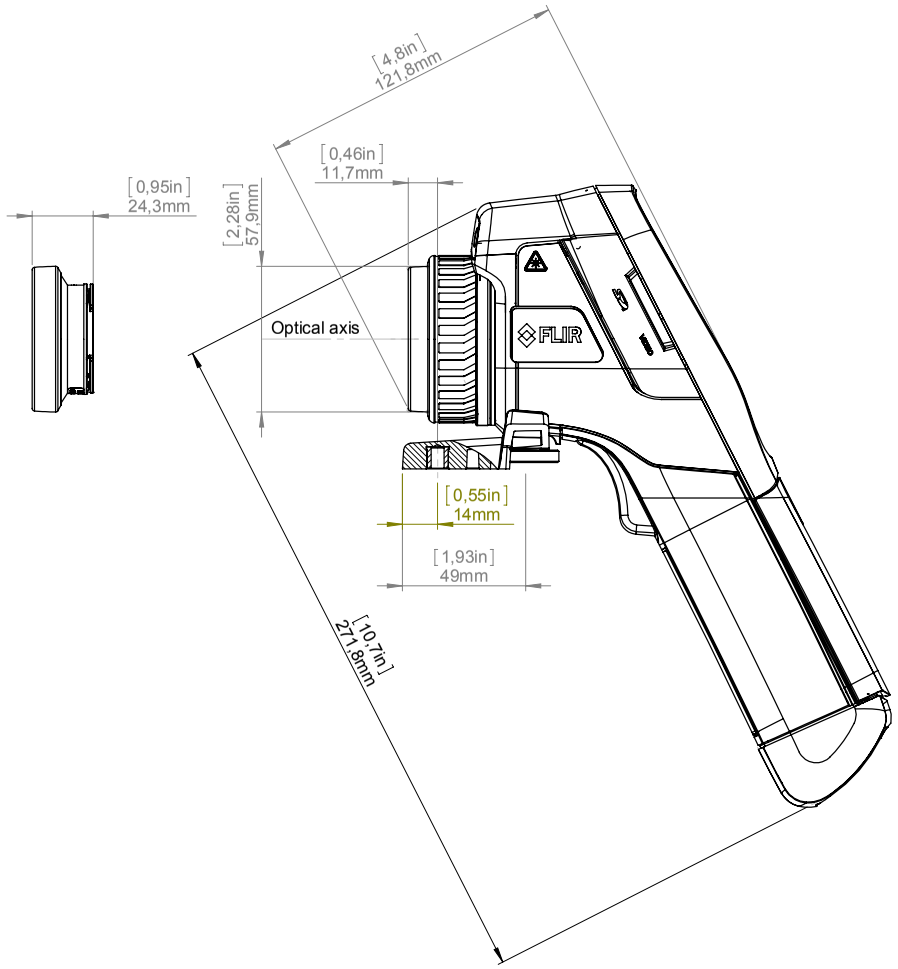

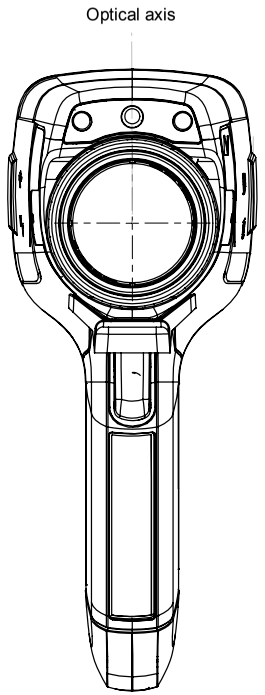

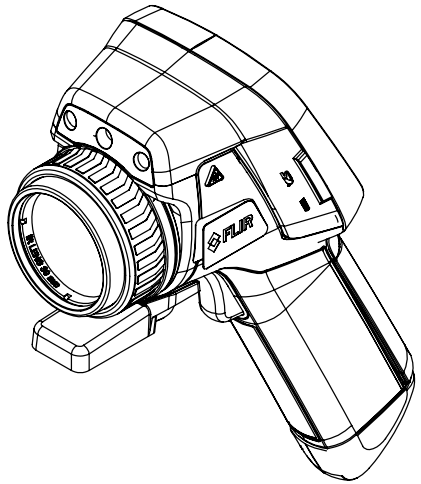

© 2012, FLIR Systems, Inc. All rights reserved worldwide. No part of this drawing may be reproduced, stored in a retrieval system, or transmitted in any form, or by any means, electronic, mechanical, photocopying, recording, or otherwise, without written permission from FLIR Systems, Inc. Specifications subject to change without further notice. Dimensional data is based on nominal values. Products may be subject to regional market considerations. License procedures may apply. Product may be subject to US Export Regulations. Please refer to exportquestions@flir.com with any questions. Diversion contrary to US law is prohibited.

For additional dimensions see page 1

Modified	Check	Drawn by
2013-04-18	CAHA	R&D Thermography

Denomination

Basic dimensions Flir Exx series

Size	Sheet
A3	3(4)
Scale 1:2	
Drawing No. T127869	Size A

Camera with Lens IR f=76 mm (6°) incl support

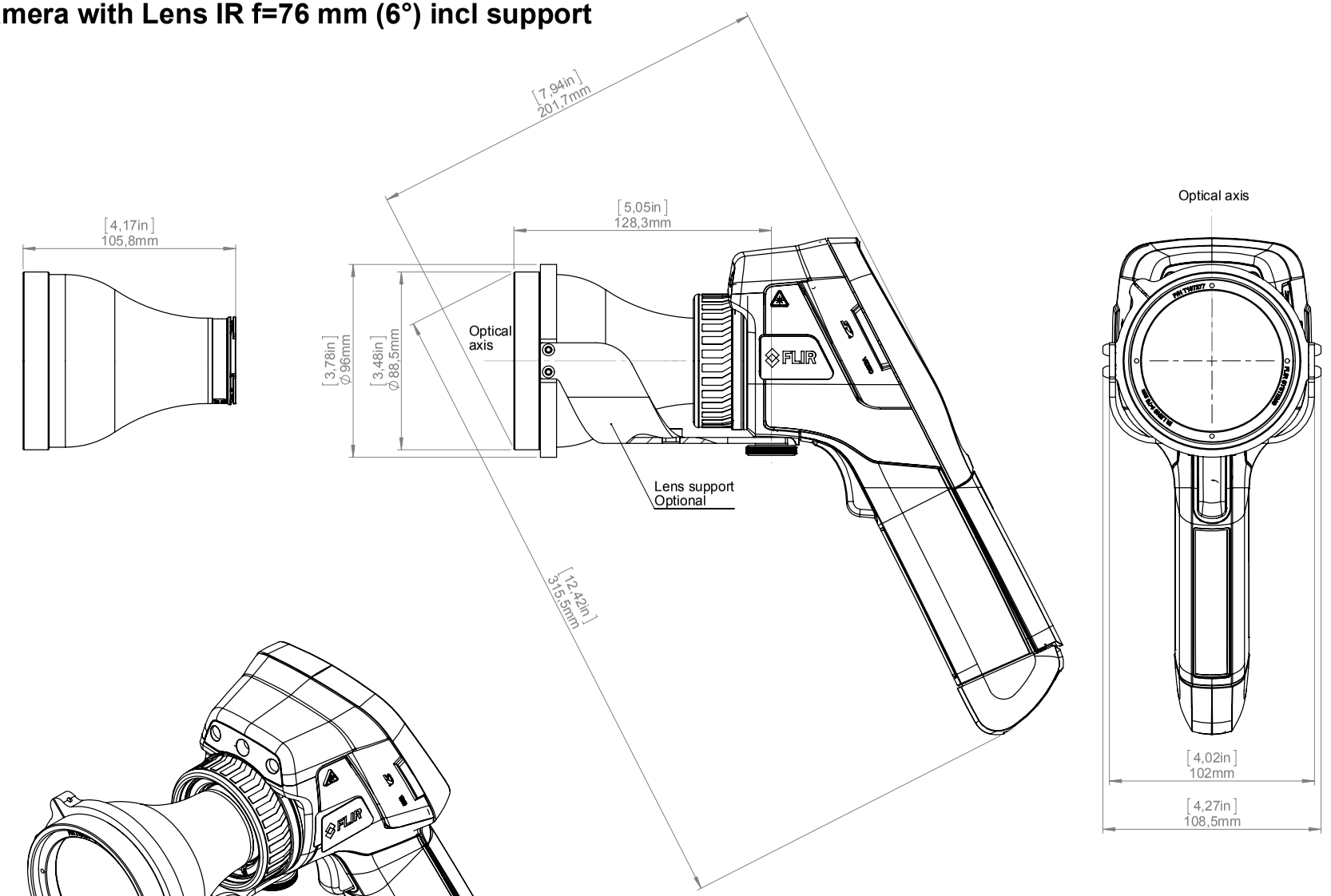

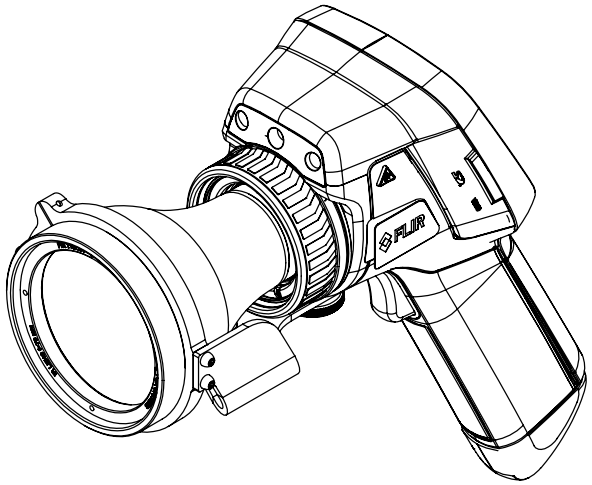

For additional dimensions see page 1

Modified	Check	Drawn by
2013-04-18	CAHA	R&D Thermography

Denomination

Basic dimensions Flir Exx series

Size	Sheet
A3	4(4)
Scale 1:2	
Drawing No. T127869	Size A

© 2012, FLIR Systems, Inc. All rights reserved worldwide. No part of this drawing may be reproduced, stored in a retrieval system, or transmitted in any form, or by any means, electronic, mechanical, photocopying, recording, or otherwise, without written permission from FLIR Systems, Inc. Specifications subject to change without further notice. Dimensional data is based on nominal values. Products may be subject to regional market considerations. License procedures may apply. Product may be subject to US Export Regulations. Please refer to exportquestions@flir.com with any questions. Diversion contrary to US law is prohibited.