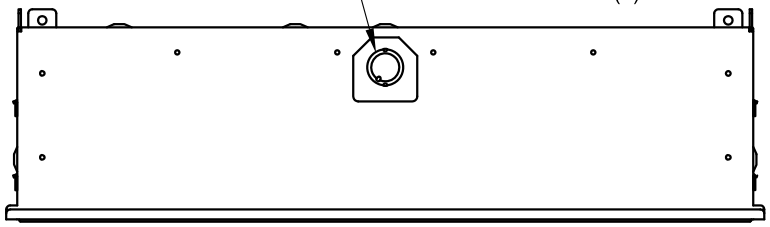

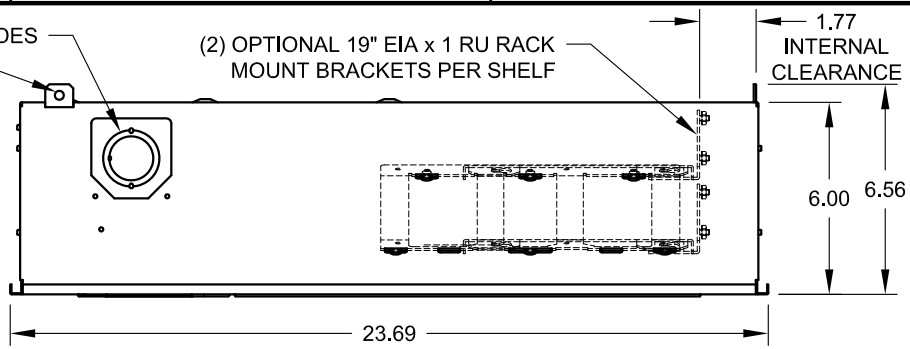

UNIT IS DESIGNED SPECIFICALLY TO FIT INSIDE T-STRINGER FRAME OF 2'x2'- OR 2'x4'- SPACING DROP CEILING.

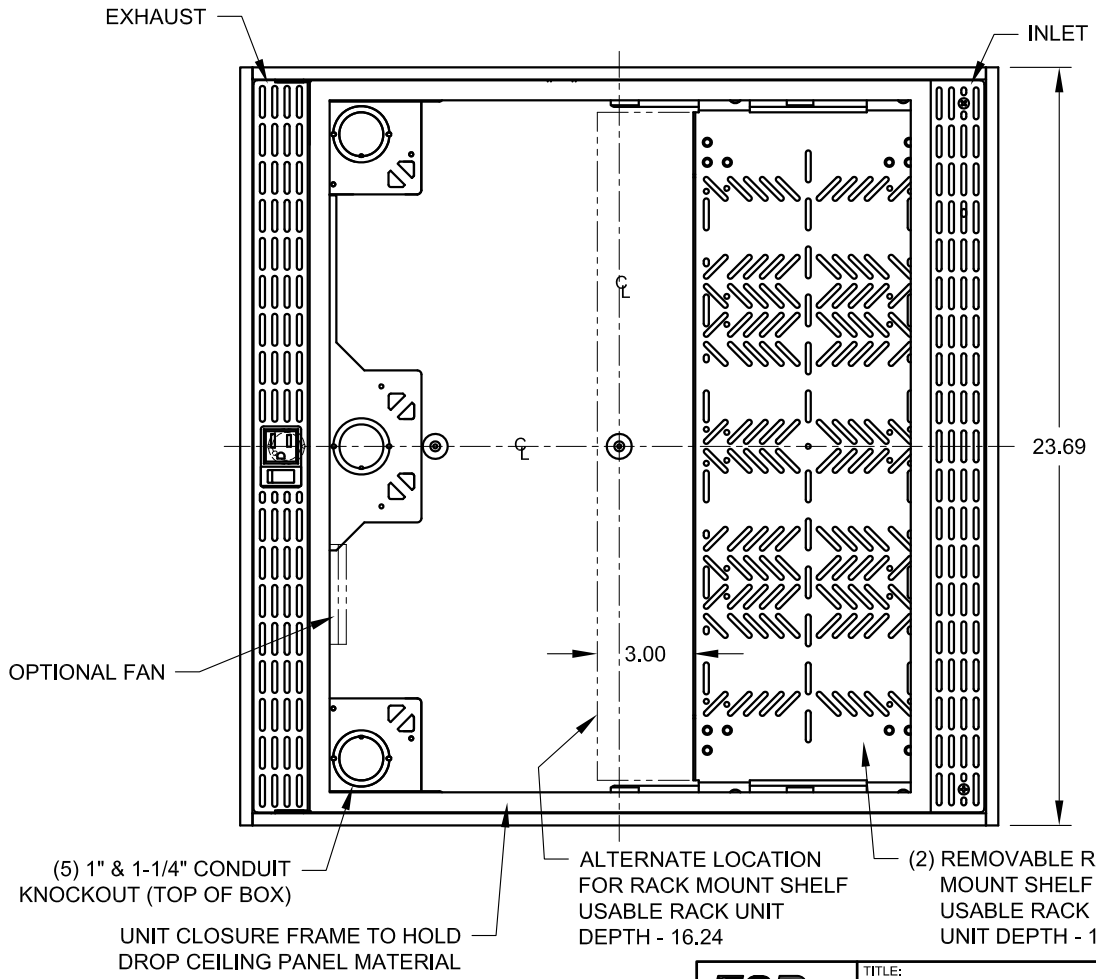

FSR inc.
244 BERGEN BLVD.
WOODLAND PARK, NJ 07424
TEL. (973) 785-4347
FAX (973) 785-3318

TITLE: CB-22		
DRAWN BY: JRE	DATE: 03/20/12	REV: 01
DWG#: CB-22	PAGE: 1 OF 1	SCALE: 1:6