T3-AC2HW INSTALLATION INSTRUCTIONS

FSR

244 Bergen Boulevard, Woodland Park, NJ 07424, Phone: 973.785.4347 - Fax: 973.785.4207

Touchboards
205 Westwood Ave, Long Branch, NJ 07740
Phone: 866-94 BOARDS (26273) / (732)-222-1511
Fax: (732)-222-7088 | E-mail: sales@touchboards.com

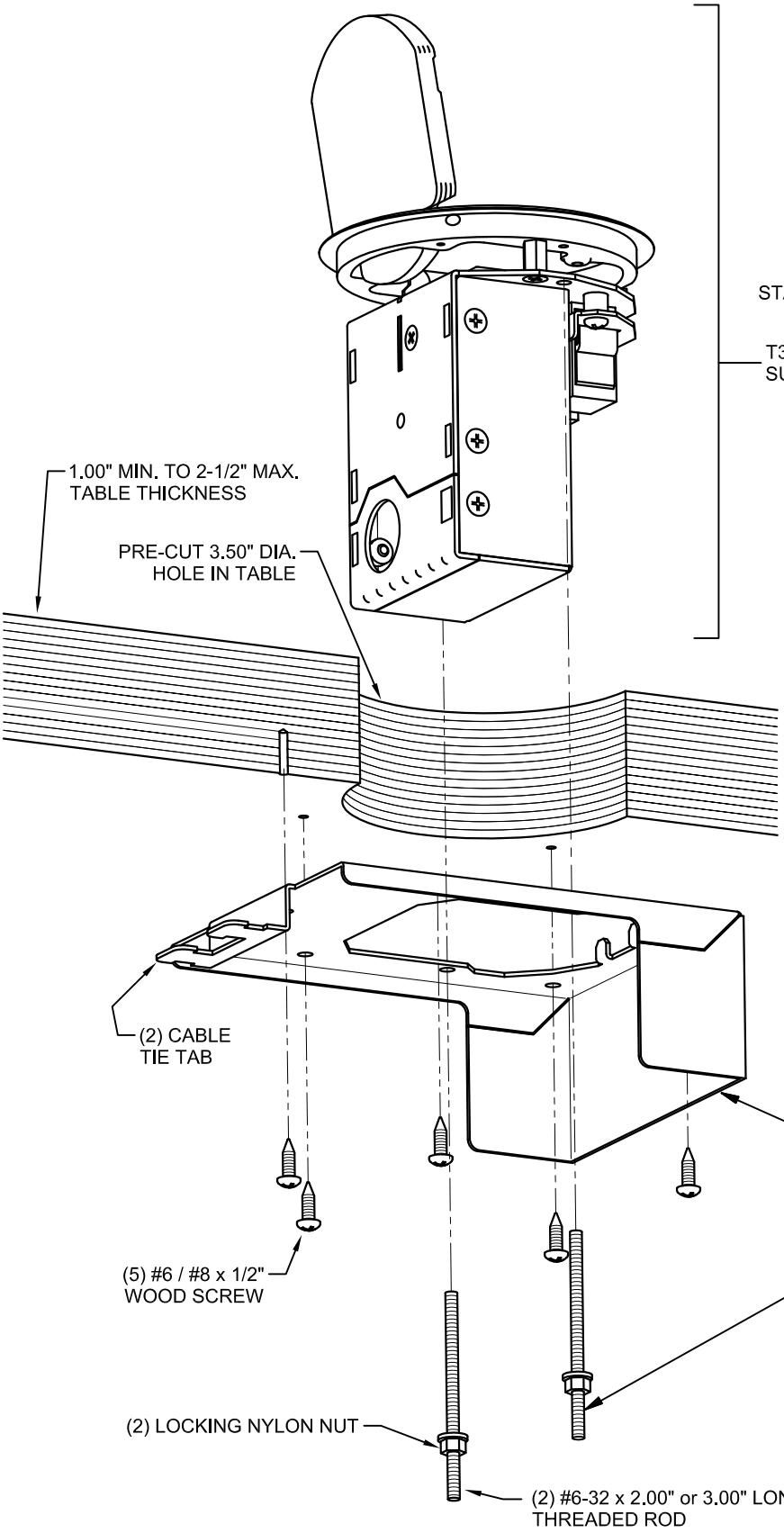

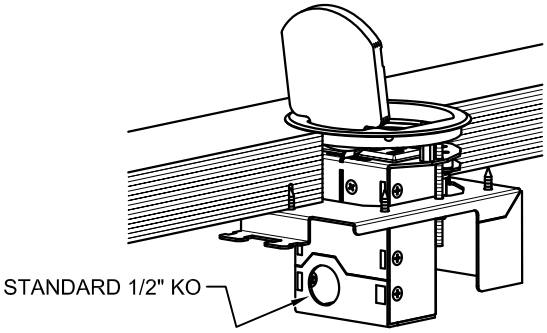

ASSEMBLED VIEW

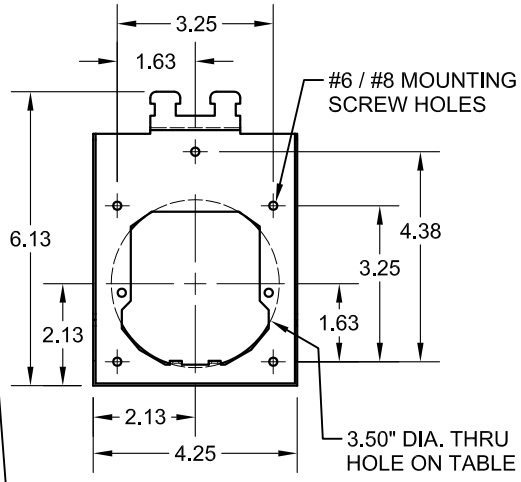

UNDERSIDE VIEW OF SHROUD

2. PLACE THE 'T3-AC2HW' SUB-ASS'Y INTO THE HOLE IN THE TABLE (COVER ORIENTATION IS PRE-SET BY THE SHROUD INSTALLATION).

1. INSTALL CLAMP SHROUD TO UNDERSIDE OF TABLE HOLE WITH (5) WOOD SCREWS AS SHOWN. ORIENT PER DESIRED COVER SWING DIRECTION.

3. PASS THE DESIRED-LENGTH (2) LONG THREADED ROD THRU THE SHROUD AND THREAD INTO SHORT STANDOFFS IN THE SUB-ASS'Y. TURN THE LOCKING NYLON NUT UP SNUG AGAINST THE SHROUD BASEPLATE TO PULL THE SUB-ASS'Y DOWN COMPLETELY INTO PLACE IN THE PRE-CUT 3.50" DIA. HOLE.

4. MAKE ELECTRICAL CONNECTIONS AS REQUIRED AND TIE-WRAP CABLES TO TIE-TABS.
ENSURE ENCLOSED END OF WIRE NUTS FACE RECEPTACLES