T3-AC2HWCP INSTALLATION INSTRUCTIONS

FSR
244 Bergen Boulevard, Woodland Park, NJ 07424, Phone: 973.785.4347 - Fax: 973.785.4207

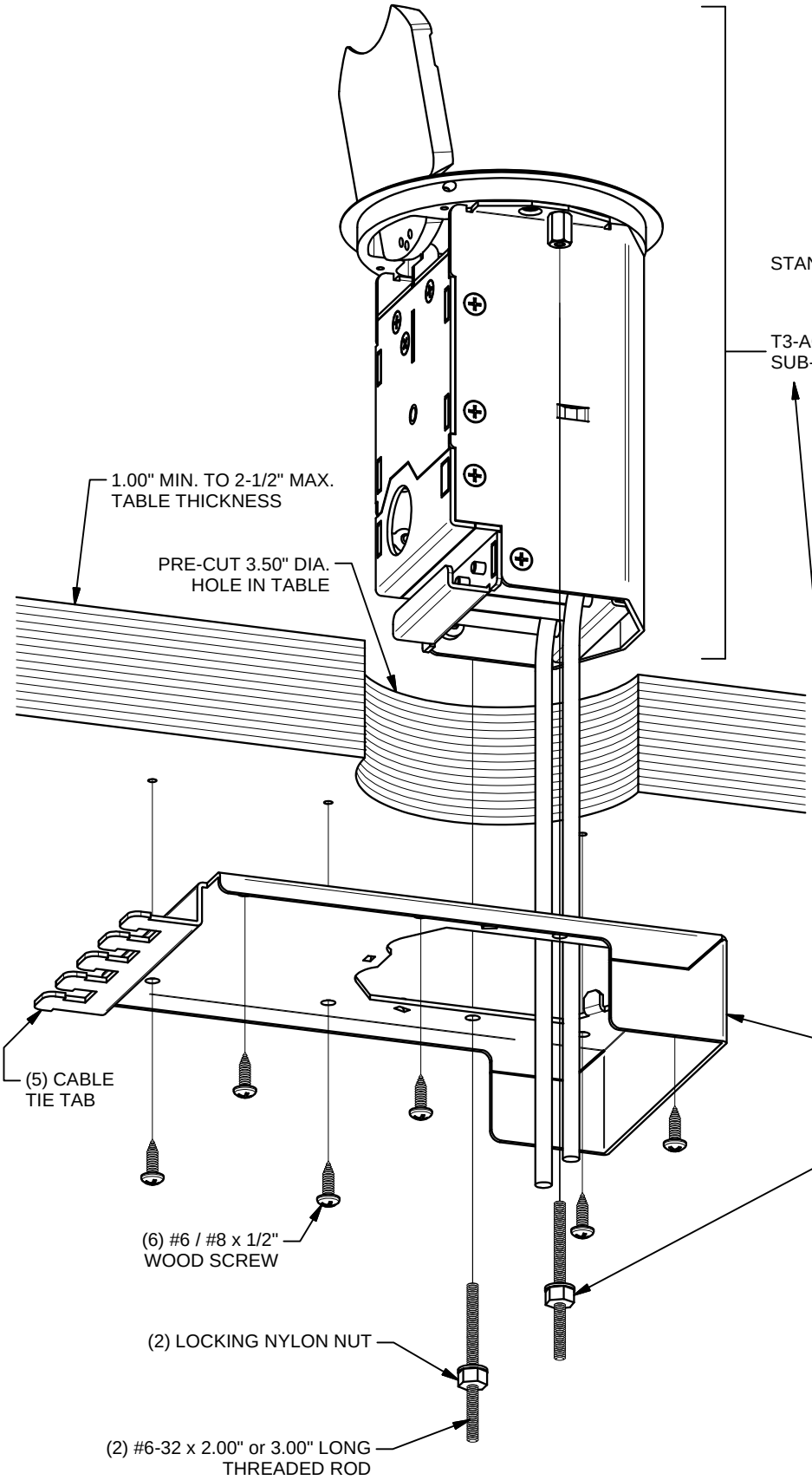

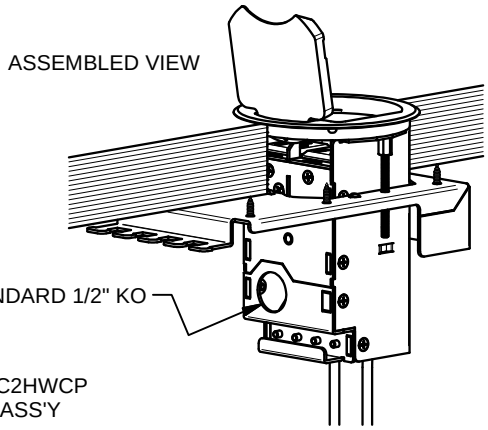

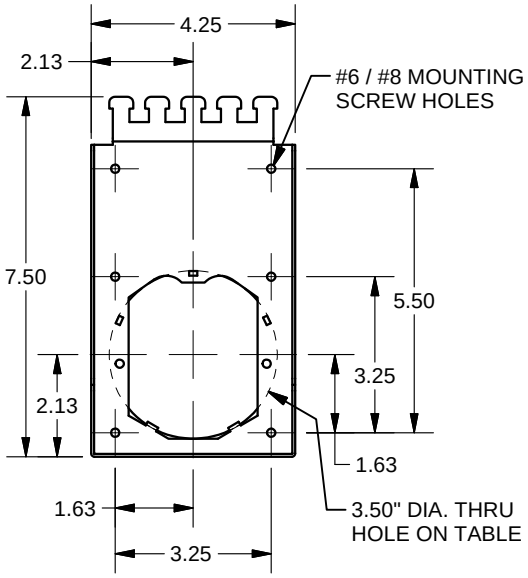

UNDERSIDE VIEW OF SHROUD

2 DROP THE 'T3-AC2HWCP' SUB-ASS'Y INTO THE HOLE IN THE TABLE (COVER ORIENTATION IS PRE-SET BY THE SHROUD INSTALLATION).

1 INSTALL CLAMP SHROUD TO UNDERSIDE OF TABLE HOLE WITH (6) WOOD SCREWS AS SHOWN. ORIENT PER DESIRED COVER SWING DIRECTION.

3 PASS THE DESIRED-LENGTH (2) LONG THREADED ROD THRU THE SHROUD AND THREAD INTO SHORT STANDOFFS IN THE SUB-ASS'Y. TURN THE LOCKING NYLON NUT UP SNUG AGAINST THE SHROUD BASEPLATE TO PULL THE SUB-ASS'Y DOWN COMPLETELY INTO PLACE IN THE PRE-CUT 3.50" DIA. HOLE.

4 CONNECT TO 15 OR 20 AMP BRANCH CIRCUIT ONLY. MAKE ELECTRICAL CONNECTIONS AS REQUIRED AND TIE-WRAP CABLES TO TIE-TABS. ENSURE CONNECTORS IN THE SUB-ASS'Y CAN BE PULLED OUT 3'-0" PRIOR TO SECURING CABLES TO TIE TABS. <u>ENSURE CLOSED END OF WIRE NUTS FACE RECEPTACLES.</u>