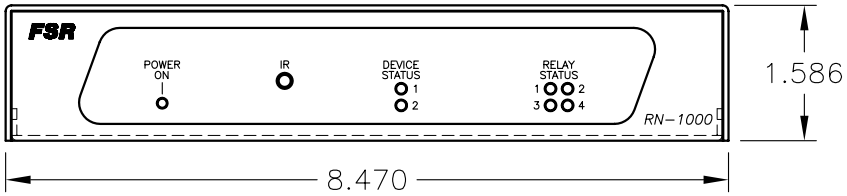

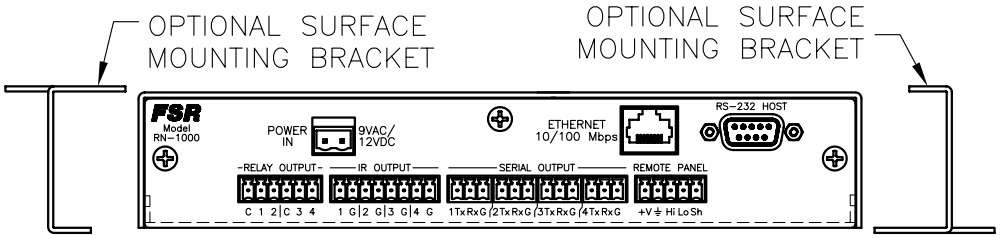

UNDER-SURFACE MOUNTING ORIENTATION

TOP-SURFACE MOUNTING ORIENTATION

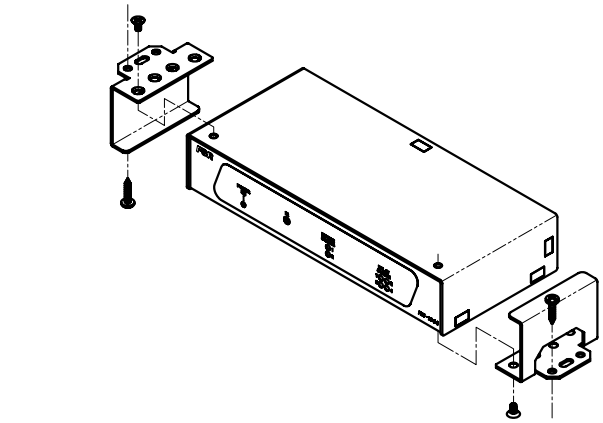

UNDER-SURFACE MOUNTING ORIENTATION

TOP-SURFACE MOUNTING ORIENTATION

CHASSIS DEPTH INSIDE RACK IS 3.81 IN.

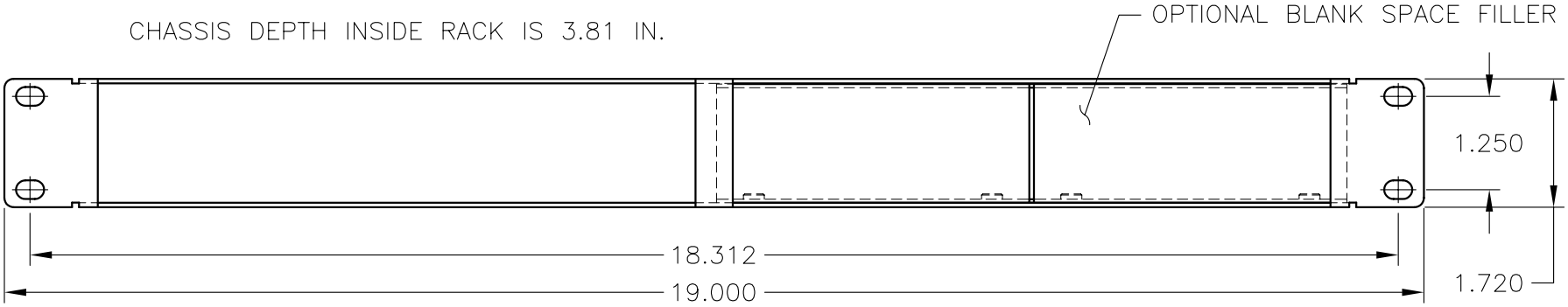

PROVIDED RACK MOUNT KIT

FSR inc.
244 BERGEN BLVD.
W. PATERSON, NJ 07424
TEL. (973) 785-4347
FAX (973) 785-3318

TITLE: RELAY CONTROLLER RN-1000

DRAWN BY: JRE	DATE: 10/22/07	REV: 01
DWG#: RN-1000	PAGE: 1 OF 1	SCALE: 1:2.25