KINETIC WATER RAM PARTS LIST

ITEM NO.		CATALOG NO.	DESCRIPTION - MODEL "G"
143015		G-01	Shank
143020		G-02	Locknut
143025		G-03	Cap Screw
143045		G-04	Sealing Washer
142055		G-05	Locknut
142065	*	G-06	O-Ring
143075		G-07	Solder Ring
143085		G-08	Pump Bottom Cap
143095		G-09	Pump Shaft
143100	*	G-10	Valve Seat Washer
143115		G-11	Spacer
143120	*	G-12	1/4" x 20 Hex Nut
143130	*	G-13	1/4" Lock Washer
143140	*	G-14	Cup Spreader
143150	*	G-15	Leather Cup
143160		G-16	Washer
143170		G-17	Pump Shaft Spring
143185		G-18	Air Pump Cylinder & Nut
143195		G-19	Air Chamber Cylinder
143205		G-20	Handle
143210		G-21	Schrader Valve
143225		G-22	Roll Pin
143230		G-23	Set Screw
143240		G-24	Ball Handle
143250	*	G-25	"E" Ring
143260	*	G-26	Trigger Pin
143275		G-27	Trigger
143285	*	G-28	O-Ring
143295		G-29	Guide
143300		G-30	Pressure Gauge
143315	*	G-31	O-Ring
143325		G-32	Lifter Rod Connector
143340	*	G-34	Spring
143350		G-35	Flat Washer
143360		G-36	Roll Pin
143380		G-38	Bell Shaped Nut
143390	*	G-39	Seat Washer
143410		G-41	1/4" x 28 Fin Nut
143420		G-42	Lifter Rod Guide - Discontinued
143550		G-55	Check Valve Assembly
143500		G-55-1	Check Valve Shank
143510		G-55-2	Check Valve 1/2" Tee
143520		G-55-3	Check Valve Adapter
143040		G-55-4	Check Valve Spring
143530		G-55-5	Check Valve Ball
143540		G-55-6	Check Valve Insert
143555		G-57	O-Ring Retainer Washer
143560		G-CVK	Check Valve Assembly Kit (Incl. G-45, G-46, G-55)

ITEM NO.		CATALOG NO.	DESCRIPTION - MODEL "E"
143015		E-1	Shank
143020		E-2	Locknut (2)
143030		E-3	Water Inlet Check Valve Gasket
143040		E-4	Water Inlet Check Valve Spring
143050		E-5	Water Inlet Check Valve Ball
143060		E-6	Water Inlet Check Vavle Body
143070		E-7	Locknut
143080	*	E-8	O-Ring
143090		E-9	Solder Ring (Obsolete)
143100	*	E-10	Valve Seat Washer
143110		E-11	Pump Bottom Cap
143120	*	E-12	1/4" x 20 Hex Nut
143130	*	E-13	1/4" Lock Washer
143140	*	E-14	Cup Spreader
143150	*	E-15	Leather Cup
143160	*	E-16	Washer
143170		E-17	Pump Shaft Spring
143180		E-18	Pump Shaft & Spacer
143190		E-19	Air Pump Cylinder & Nut
143200		E-20	Air Chamber Cylinder (Obsolete)
143210		E-21	Schrader Valve
143220		E-22	Handle
143230		E-23	Set Screw
143240		E-24	Ball Handle
143250	*	E-25	"E" Ring
143260	*	E-26	Trigger Pin
143270		E-27	Trigger Pin
143280		E-28	"E" Ring
143300		E-30	Pressure Gauge
143310		E-31	O-Ring
143320		E-32	Guide
143330		E-33	O-Ring
143340		E-34	Spring
143350		E-35	Flat Washer
143360		E-36	Roll Pin
143370		E-37	Lifter Rod (Obsolete)
143380		E-38	Bell Shaped Nut
143390		E-39	Seat Washer
143400		E-40	Flat Washer
143410		E-41	1/4" x 28 Fin Nut

*These parts, plus Neat's foot Oil, are included in KR-RK Ram Repair Kit.

132370	KR-DVD	Instructional DVD (for both "E" and "G" Rams)

ACCESSORIES (Use prefix "G" or "E" as indicated depending on model)

143430	G- or E-43-4	4" Rubber Cone
143440	G- or E-43-6	6" Rubber Cone
143450	G- or E-44	Caulking Hose
143460	G-or E-45	Supply Hose
143470	G- or E-46	Universal Faucet Adapter
143490	G- or E-48	Set of 5 Drain Adapters
143494	G-or E-49/50	Threaded Faucet Adapter
142700	G- or E-52	Extension Hose

143496	KR-RK	Ram Repair Kit
142010	KR-CA	Toilet Attachment
142000	KR-CC	Carrying Case
142020	1-1/2EX	1-1/2" Expansion Plug
142030	2EX	2" Expansion Plug
142040	3EX	3" Expansion Plug
142050	4EX	4" Expansion Plug

(C) General Wire Spring Co. 2018

KINETIC WATER RAM-MODEL G
SCHEMATIC DIAGRAM

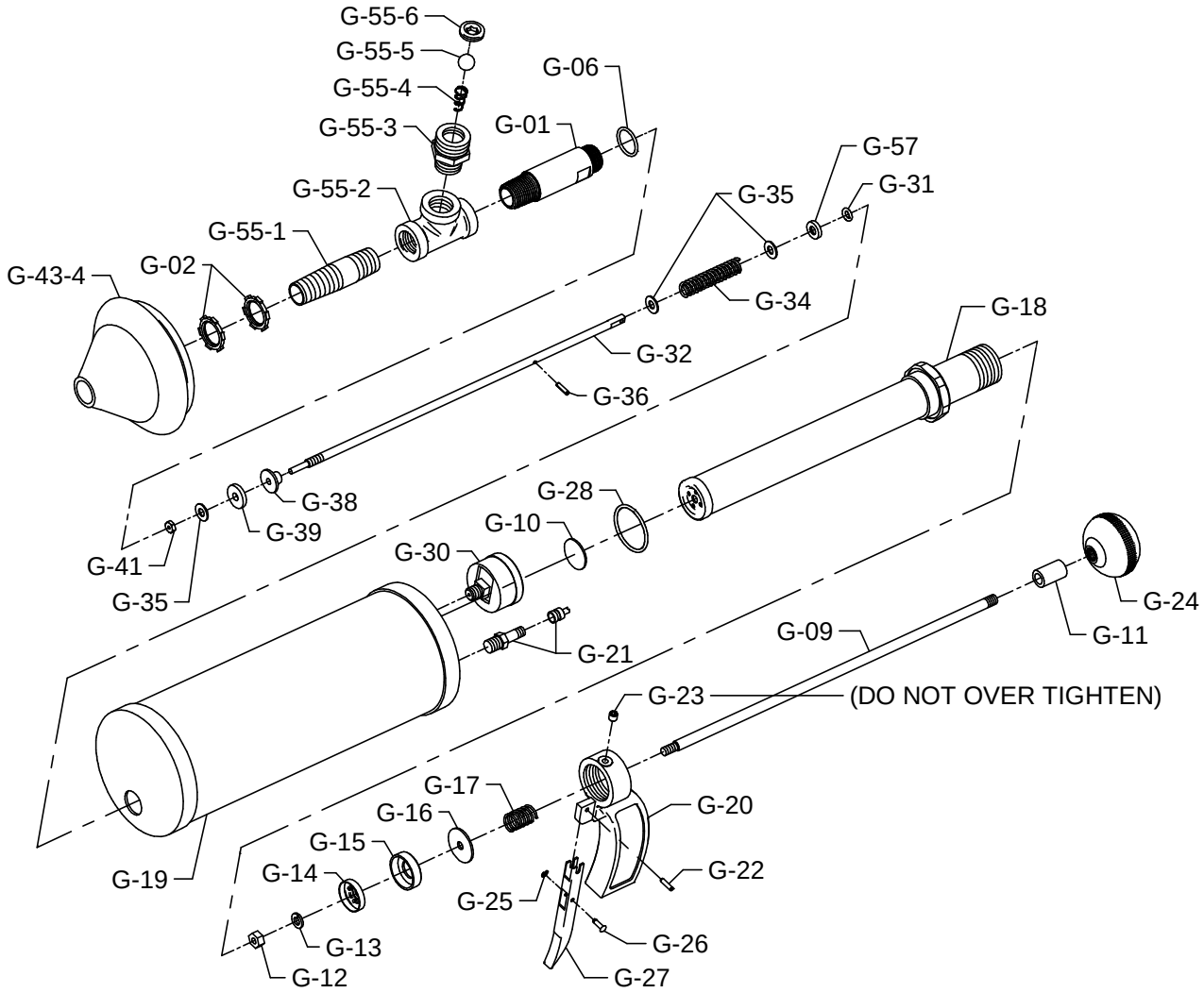

KINETIC WATER RAM-MODEL E

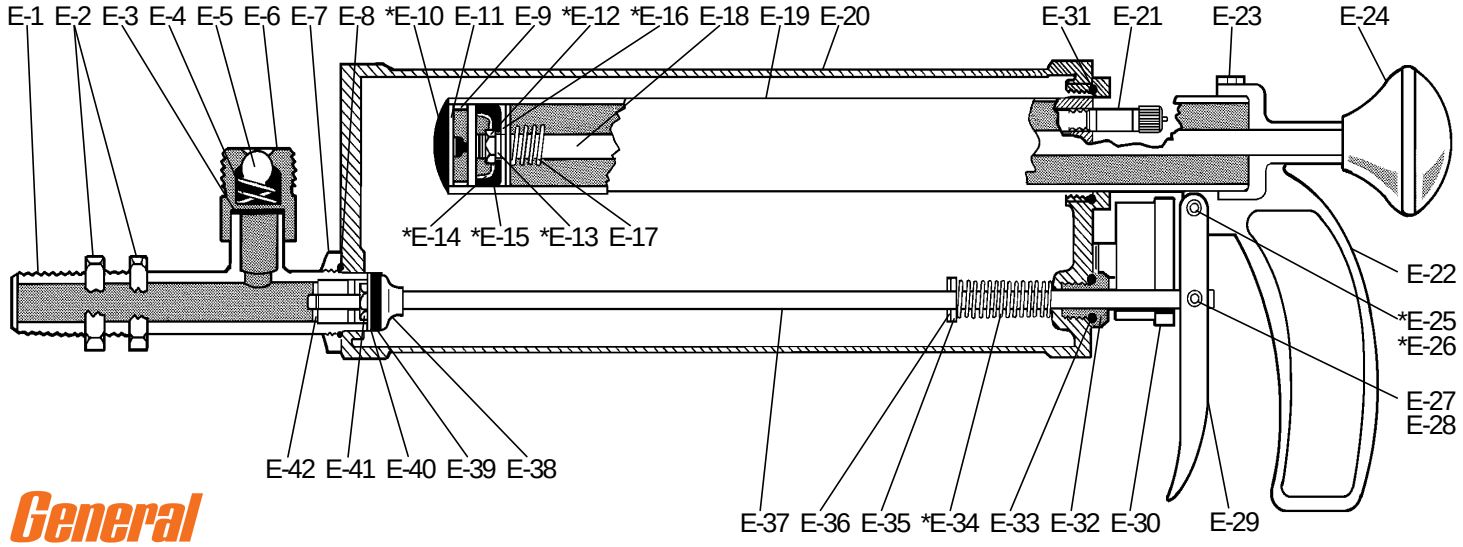

General PIPE CLEANERS
www.drainbrain.com

IMPORTANT: When ordering, give Serial Number of Machine.