Revision level		Revision Record	Changed	Date	Approved	Date
part	drawing					
–	04	See ECN 012383	A.A.C.	06/17/13	K.A.C.	06/17/13

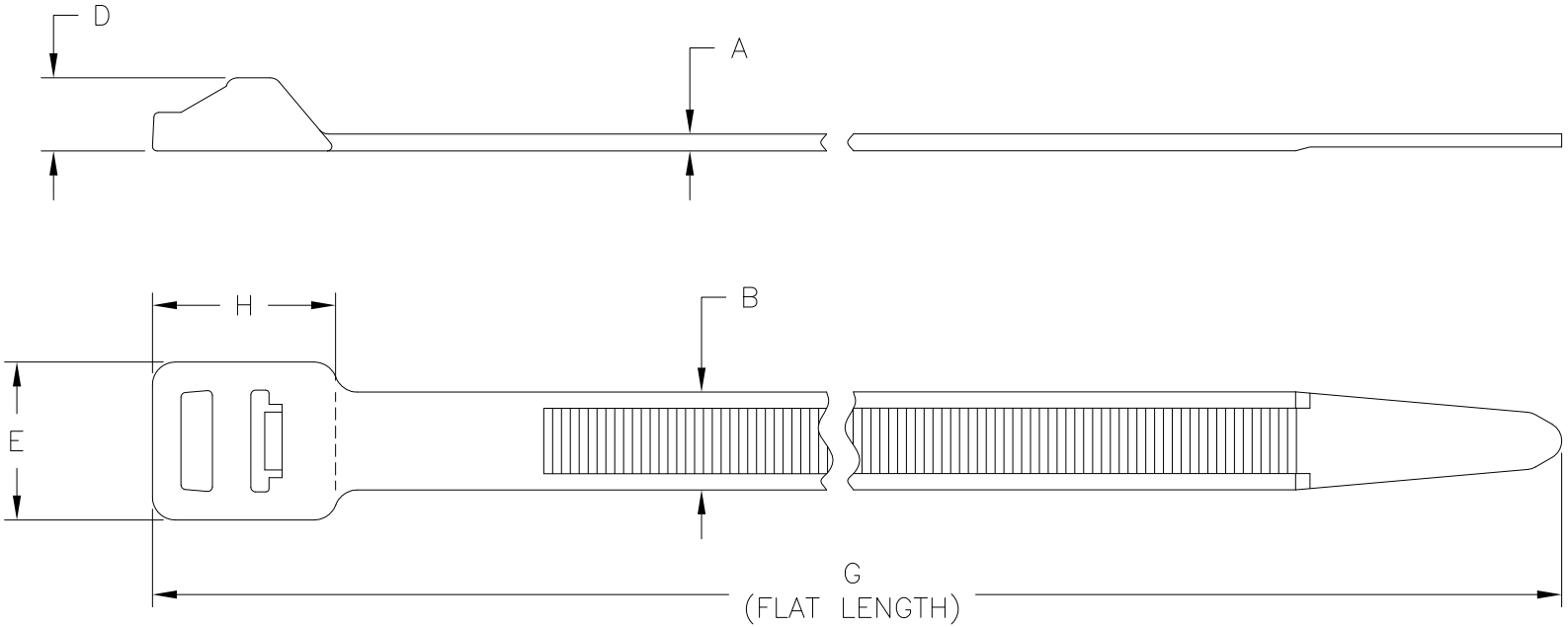

PRODUCT CODE DESCRIPTION

T250R_UV
└ COLOR
(CONSULT FACTORY FOR AVAILABLE COLORS)

Aerospace Spec Tie SAE AS33671	Type	Cable Range (mm)	Material	A	B	D	E	G	H	Min Loop Tensile Strength (newtons)
no	T250R	12 to 125	PA66	1.9 ±0.2	12.5±0.2	9.5 ±0.5	20.0 ±0.5	515.0 ±5.0	22.4 ±1.0	1115
no			PA66HIRHSUV							

SEE CHART

Material

Dimension tolerances unless otherwise specified
.XXXX =
.XXX =
.XX =
.X = ± NOTED
∠ =

Dimension Units mm

PERFORMANCE SPECIFICATION

ACAD MECH 2010

Drawn	A.A.M.	12/05/00
Approved	K.A.C.	06/17/13

ALL PROPRIETARY RIGHTS IN THE SUBJECT MATTER SHOWN ON THIS DRAWING ARE EXCLUSIVE PROPERTY OF HELLERMANNTYTON

HellermannTyton
7930 N. Faulkner Rd.
Milwaukee, WI 53224
Ph: (414) 355-1130
Fx: (414) 362-8338

Scale 1:1

Computer File Number CT\CST\2250003_04

Title

Phase: Production

T250R HEAVY DUTY LASHING CABLE TIE

Drawing-No

CT2250003CST

Format AH

Sheet 1 of 1