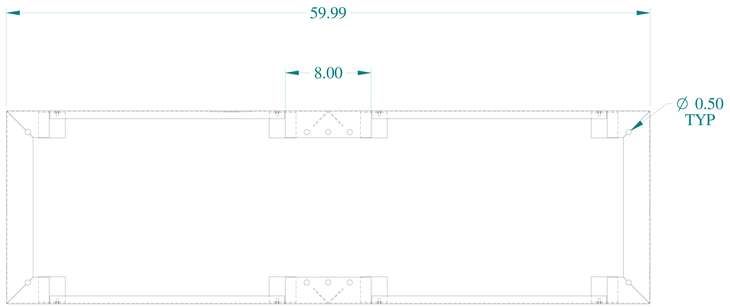


TOP VIEW

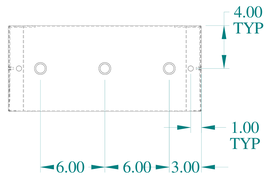


SIDE VIEW

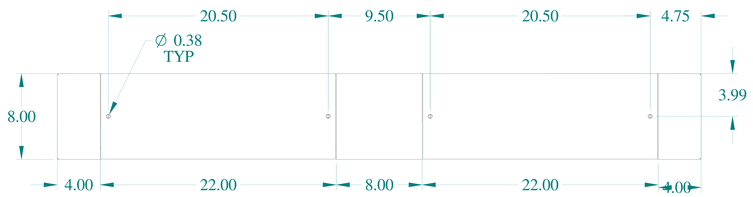


FRONT VIEW

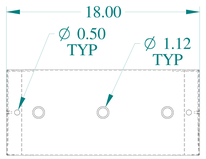


SIDE VIEW

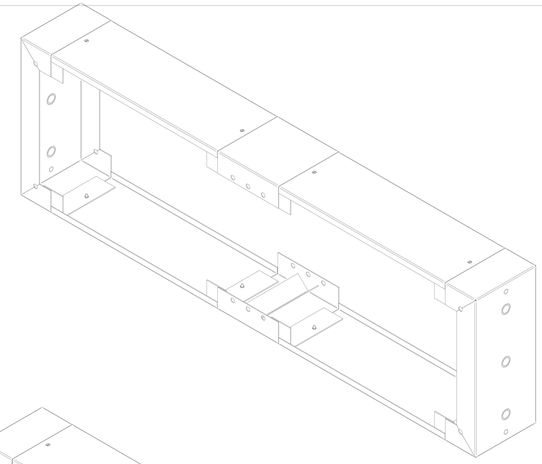

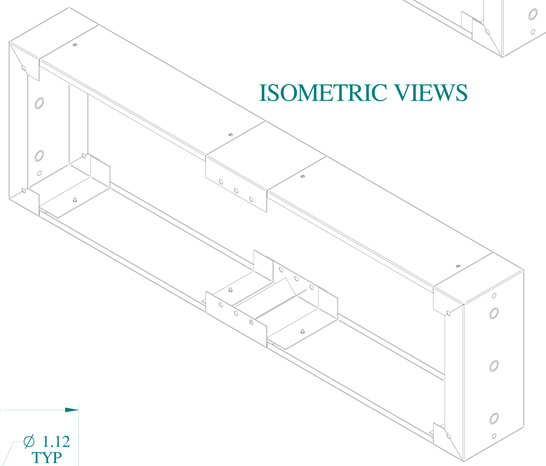

ISOMETRIC VIEWS

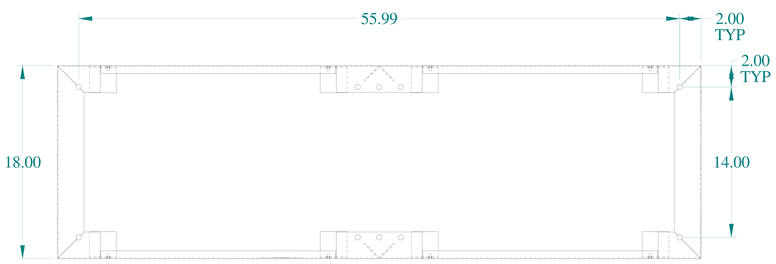


BOTTOM VIEW

HAMMOND MANUFACTURING®

www.hammondmfg.com

Data subject to change without notice.

| | |
|---|---|
| Part # : 2CSP86018 | Date : Mar. 24, 2019 |

Link:www.hammfg.com/2CSP86018