TOP VIEW

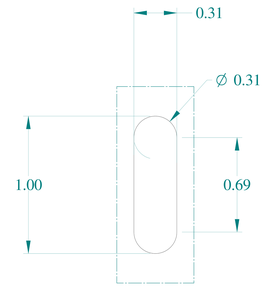

DETAIL Z
TYP

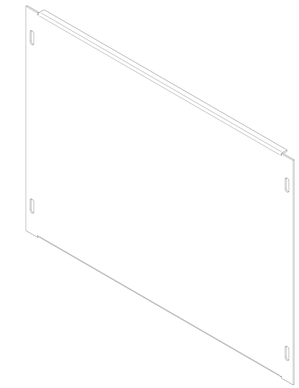

ISOMETRIC VIEWS

SIDE VIEW

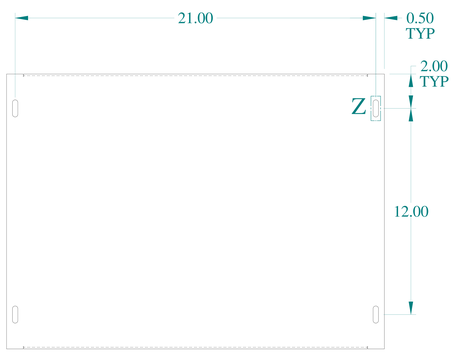

FRONT VIEW

SIDE VIEW

INSIDE VIEW

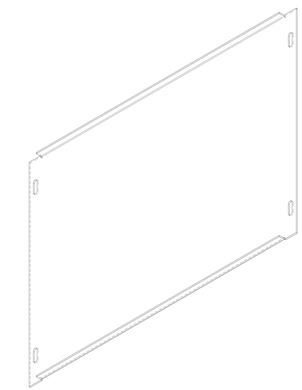

BOTTOM VIEW

HAMMOND MANUFACTURING®

www.hammondmfg.com

Data subject to change without notice.

Part # : 2CWDP24	Date : Mar. 24, 2019

Link:www.hammfg.com/2CWDP24