JHWW55RC11BL

55" Wide x 24" Deep 11-Drawer Roll Cabinet, Professional Series, Blue

PRODUCT DETAILS

- Made of High-Quality Class I steel to enhance strength and finish
- Double wall construction provides strength
- Reinforcement corner gussets add strength and reduce racking
- 2" mounting centers provide flexibility in arranging drawers to individual needs
- Drawers equipped with positive latching drawer retention to prevent unwanted drawer opening
- All drawers equipped with 75 pound full extension ball bearing slides with quick disconnect
- All 4" and deeper drawers provide for adding additional slides to double drawer capacity
- Rolled hem on all drawers provide superior strength, rigidity and safety
- Casters absorb vibrations transmitted to frame while moving on uneven surfaces
- Casters equipped with pedal brake and ball bearings for easy operation
- High luster paint protects against scratches, peeling, blistering and corrosion
- Paint pretreatment process both sprays and immerses boxes for added corrosion protected
- Drawer liners included at no extra charge
- Two point locking design adds extra security on all chests
- W4X5RV Side Handles
- Casters 5"x2", weight capacity 600 lbs. per caster
- Weight capacity 75 lbs. per rail

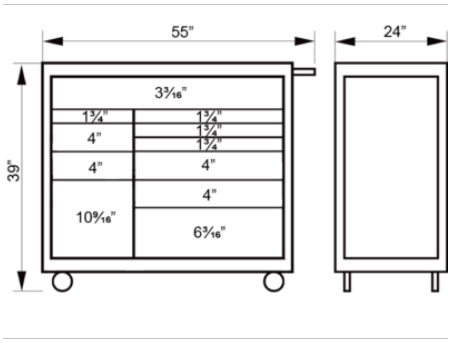

PRODUCT ATTRIBUTES

Product		
JHWW55RC11BL	39 x 55 x 24 in	25000 in^3