Linear Scale System Diagram

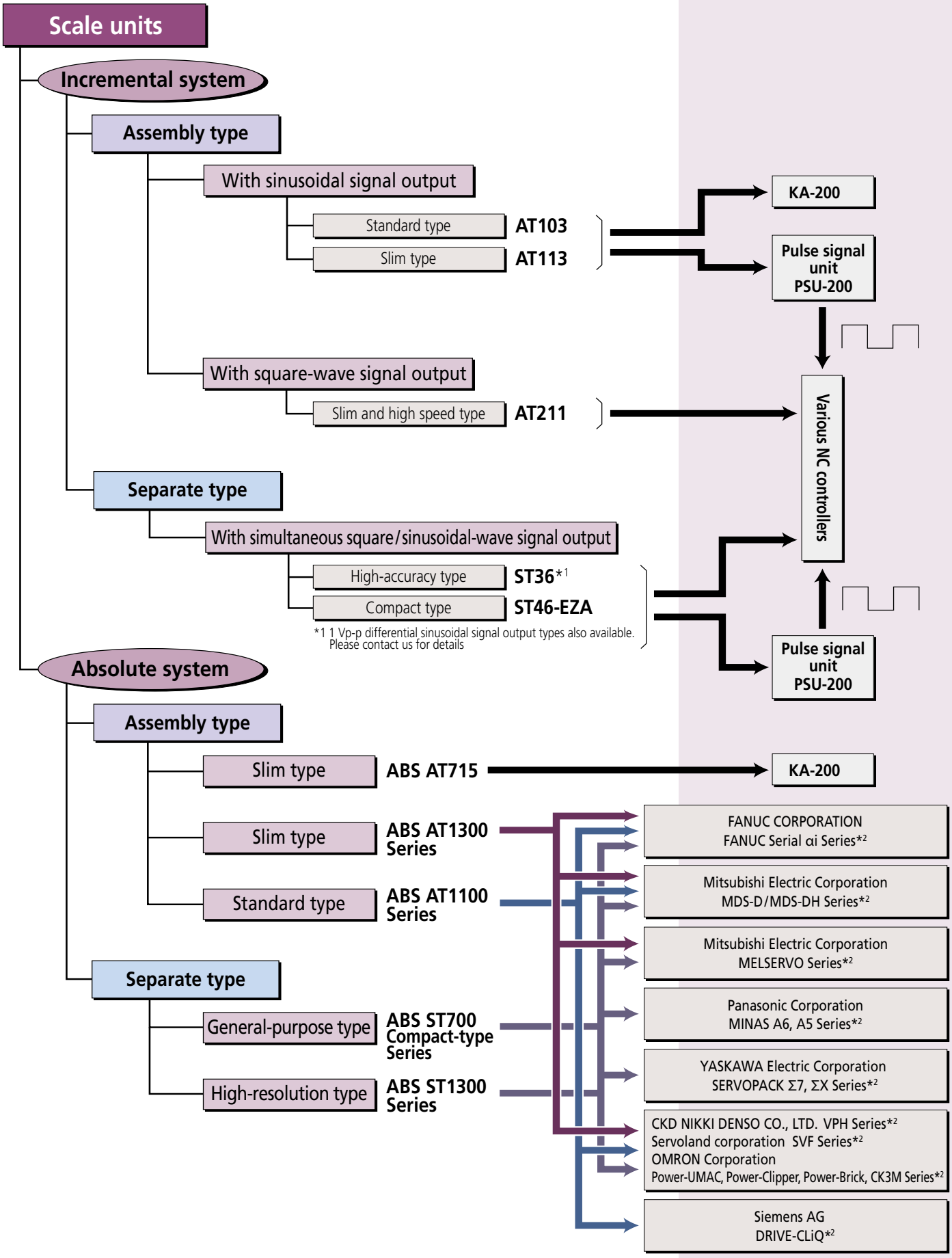

*2 Please contact each manufacturer for details.

Mitutoyo reserves the right to change any or all aspects of any product specification, including prices, designs and service content, without notice.