Mitutoyo

Optional Accessories

Rotary tables

Rotary table with Fine Wheel (A)

Order No.: **176-305**
Application: Workpiece orientating/positional fine-adjustment
External dimension: 280 (W)×280 (D)×23.7 (H) mm
Tabletop: ø240 mm, 360° rotation, no angle scale
Mass: 5.5 kg
Effective glass diameter (mm): ø182
Applicable model: Size 1010, 2010 (**MF/MF-U series**)
* Option: 172-197 Swivel Center Support
176-107 Holder with Clamp
172-378 V-block with Clamp

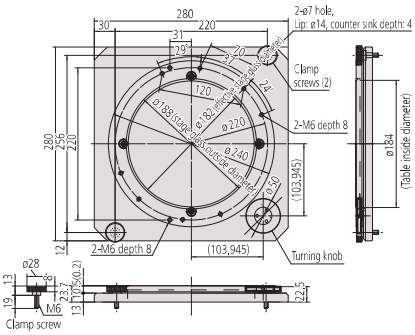

Rotary table with Fine Wheel (B)

Order No.: **176-306**
Application: Workpiece orientating/positional fine-adjustment
External dimension: 342 (W)×342 (D)×23.2 (H) mm
Tabletop: ø270 mm, 360° rotation, no angle scale
Mass: 6.5 kg
Effective glass diameter (mm): ø238
Applicable model: Size 2017, 3017, 4020 (**MF/MF-U series**)
* The V-block with Clamp, Swivel Center Support and Holder with Clamp can NOT be mounted on the table.

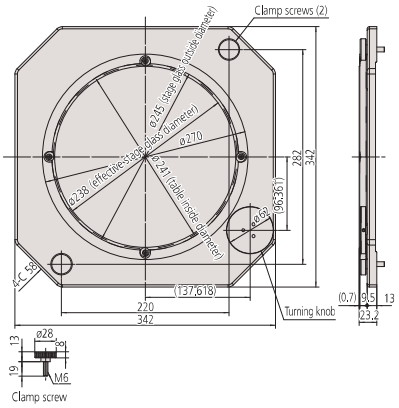

Stage Adapter

Order No.: Stage Adapter: **176-304**
Stage Adapter B: **176-310**
Application: Used when setting the workpiece fixture on the stage.
External dimensions for one piece:
50 (W)×340 (D)×15 (H) mm
*Note) Adapter B is 280 (D)
Mass: Stage Adapter: 1.5 kg
Stage Adapter B: 1.2 kg

		Stage size		
		1010	2010	2017 3017 4020
176-304	Stage Adapter	—	Not applicable	Applicable
176-310	Stage Adapter B	—	Applicable	Not applicable

Note: Not required for model 1010.

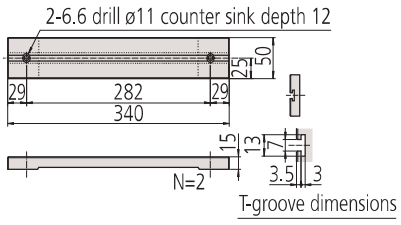

176-304 Stage Adapter

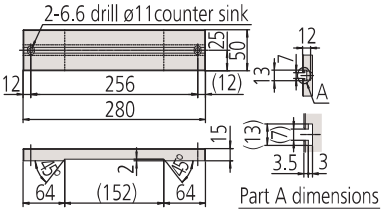

176-310 Stage Adapter