Locking Handle Details

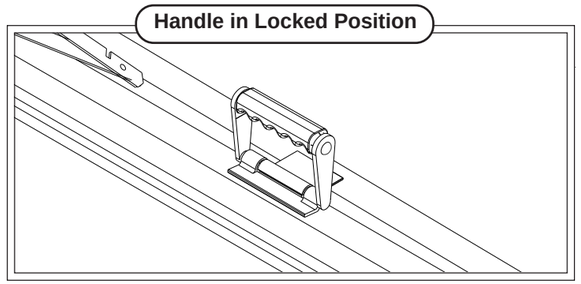

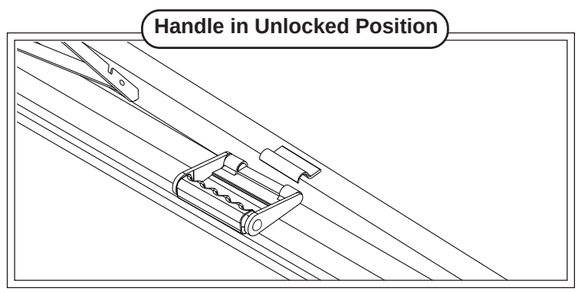

1 Rotate hand 90° to Unlock Legs

2 Spread legs

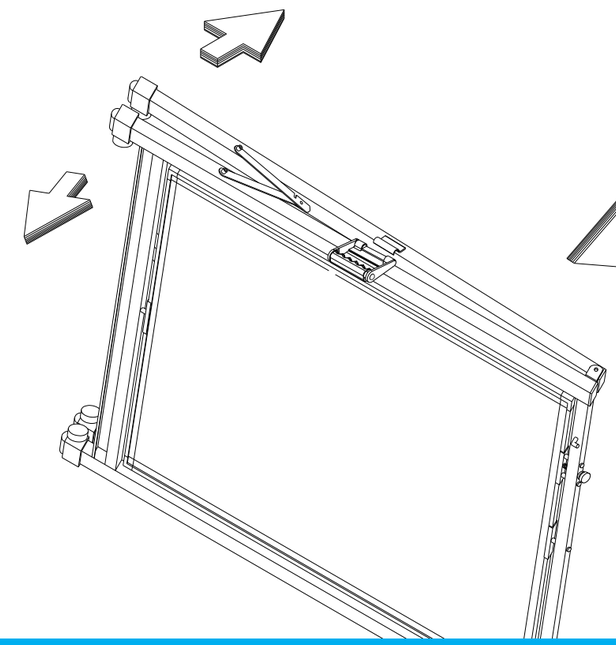

3 Press down to lock Extension Braces on both sides.

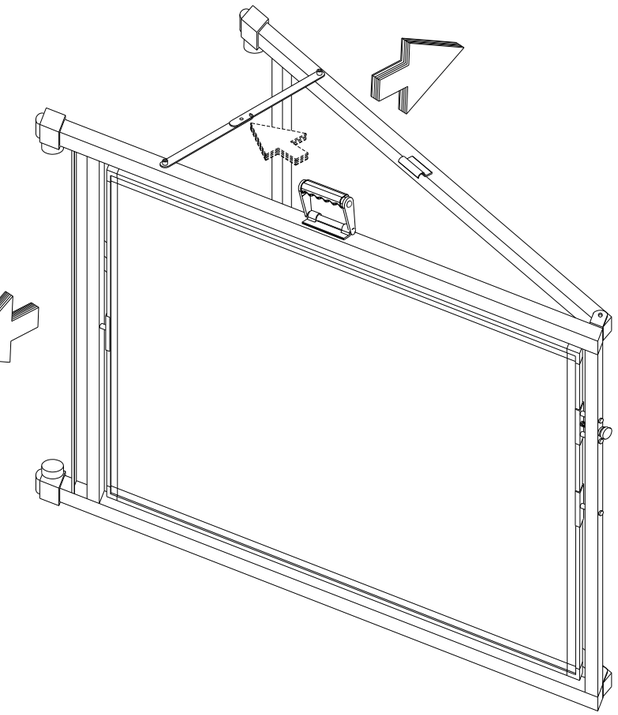

4 Loosen Knobs and Extend Legs to Desired Height. Tighten Knobs.

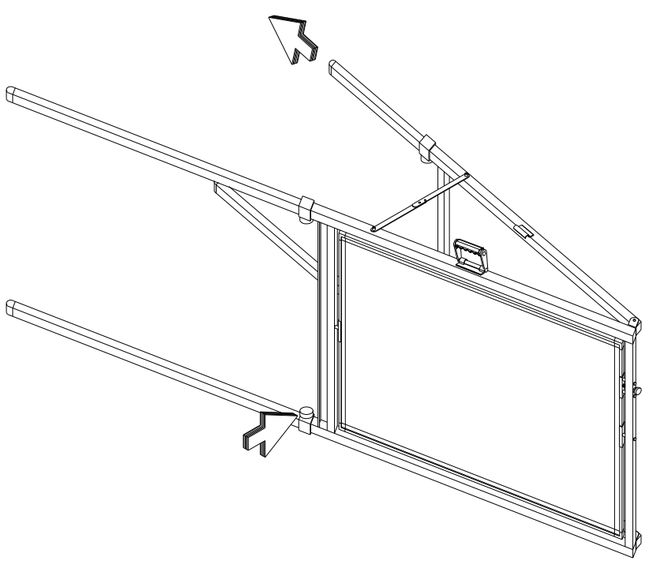

5 Pull up on Knob as indicated by arrow to rotate board.

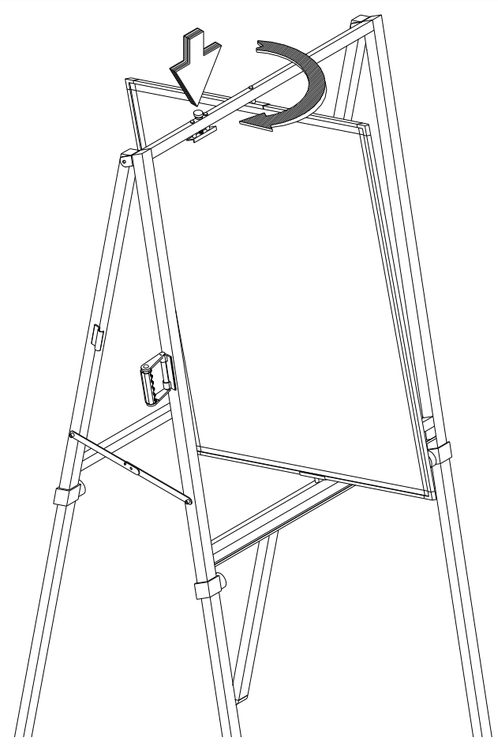

Missing Parts or UPS Damaged Parts
For Your Convenience you can EMAIL us at
support@moorecoinc.com
24HOURS 7 DAYS A WEEK

Best-Rite

Spinner Easel #799

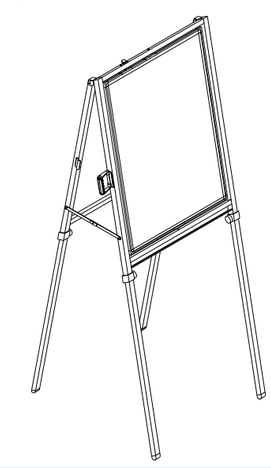

799_10-6-10